This is a digital copy of a book that was preserved for generations on library shelves before it was carefully scanned by Google as part of a project to make the world's books discoverable online.

It has survived long enough for the copyright to expire and the book to enter the public domain. A public domain book is one that was never subject to copyright or whose legal copyright term has expired. Whether a book is in the public domain may vary country to country. Public domain books are our gateways to the past, representing a wealth of history, culture and knowledge that's often difficult to discover.

Marks, notations and other marginalia present in the original volume will appear in this file - a reminder of this book's long journey from the publisher to a library and finally to you.

Usage guidelines

Google is proud to partner with libraries to digitize public domain materials and make them widely accessible. Public domain books belong to the public and we are merely their custodians. Nevertheless, this work is expensive, so in order to keep providing this resource, we have taken steps to prevent abuse by commercial parties, including placing technical restrictions on automated querying.

We also ask that you:

+ *Make non-commercial use of the files* We designed Google Book Search for use by individuals, and we request that you use these files for personal, non-commercial purposes.

+ *Refrain from automated querying* Do not send automated queries of any sort to Google's system: If you are conducting research on machine translation, optical character recognition or other areas where access to a large amount of text is helpful, please contact us. We encourage the use of public domain materials for these purposes and may be able to help.

+ *Maintain attribution* The Google "watermark" you see on each file is essential for informing people about this project and helping them find additional materials through Google Book Search. Please do not remove it.

+ *Keep it legal* Whatever your use, remember that you are responsible for ensuring that what you are doing is legal. Do not assume that just because we believe a book is in the public domain for users in the United States, that the work is also in the public domain for users in other countries. Whether a book is still in copyright varies from country to country, and we can't offer guidance on whether any specific use of any specific book is allowed. Please do not assume that a book's appearance in Google Book Search means it can be used in any manner anywhere in the world. Copyright infringement liability can be quite severe.

About Google Book Search

Google's mission is to organize the world's information and to make it universally accessible and useful. Google Book Search helps readers discover the world's books while helping authors and publishers reach new audiences. You can search through the full text of this book on the web at `http://books.google.com/`

HARVARD

#7

UNITED STATES REPORTS,

SUPREME COURT.

VOL. 103.

CASES

ARGUED AND ADJUDGED

IN

THE SUPREME COURT

OF

THE UNITED STATES.

OCTOBER TERM, 1880.

REPORTED BY

WILLIAM T. OTTO.

KF
101
.A212
V.103
C.2

VOL. XIII.

BOSTON:
LITTLE, BROWN, AND COMPANY.
1881.

Entered according to Act of Congress, in the year 1881, by
LITTLE, BROWN, AND COMPANY,
In the Office of the Librarian of Congress, at Washington.

REPLACEMENT

UNIVERSITY PRESS:
JOHN WILSON AND SON, CAMBRIDGE.

MR. JUSTICE CLIFFORD and MR. JUSTICE HUNT, *by reason of indisposition, took no part in deciding the cases reported in this volume.*

MR. JUSTICE STRONG *resigned Dec.* 14, 1880. *He, however, took part in deciding the following cases reported in this volume:—*

Allen v. *Louisiana, p.* 80; *Ashburner* v. *California, p.* 575; *County of Morgan* v. *Allen, p.* 498; *County of Tipton* v. *Locomotive Works, p.* 523; *Kilbourn* v. *Thompson, p.* 168; *Insurance Company* v. *Stinson, p.* 25; *National Bank* v. *Whitney, p.* 99; *Pennock* v. *Commissioners, p.* 44; *Railroad Companies* v. *Schutte, p.* 118; *Railroad Company* v. *Falconer, p.* 821.

MR. JUSTICE SWAYNE *took no part in deciding the cases reported, other than:—*

Allen v. *Louisiana, p.* 80; *Ashburner* v. *California, p.* 575; *Bamberger* v. *Terry, p.* 40; *Boogher* v. *Insurance Company, p.* 90; *County of Morgan* v. *Allen, p.* 498; *County of Tipton* v. *Locomotive Works, p.* 523; *Cucullu* v. *Hernandez, p.* 105; *Dennison* v. *Alexander, p.* 522; *Hall* v. *Wisconsin, p.* 5; *Insurance Company* v. *Stinson, p.* 25; *Kilbourn* v. *Thompson, p.* 168; *McCarthy* v. *Provost, p.* 673; *National Bank* v. *Whitney, p.* 99; *Peck* v. *Collins, p.* 660; *Pennock* v. *Commissioners, p.* 44; *Railroad Companies* v. *Schutte, p.* 118; *Railroad Company* v. *Falconer, p.* 821; *Railroad Company* v. *Commissioners, p.* 1; *Relfe* v. *Rundle, p.* 222; *The* "*Connemara,*" *p.* 754; *The* "*Richmond,*" *p.* 540; *United States* v. *Hough, p.* 71; *Ward* v. *Todd, p.* 327; *Weitzel* v. *Rabe, p.* 340.

JUSTICES

OF THE

SUPREME COURT OF THE UNITED STATES

DURING THE TIME OF THESE REPORTS.

CHIEF JUSTICE.

HON. MORRISON R. WAITE.

ASSOCIATES.

HON. NATHAN CLIFFORD.	HON. NOAH H. SWAYNE.[1]
HON. SAMUEL F. MILLER.	HON. STEPHEN J. FIELD.
HON. JOSEPH P. BRADLEY.	HON. WARD HUNT.
HON. JOHN M. HARLAN.	HON. WILLIAM B. WOODS.

ATTORNEYS-GENERAL.

HON. CHARLES DEVENS.
HON. WAYNE MCVEAGH.[2]

SOLICITOR-GENERAL.

HON. SAMUEL FIELD PHILLIPS.

[1] Mr. JUSTICE SWAYNE resigned Jan. 24, 1881.
[2] The commission of Mr. MACVEAGH bears date March 5, 1881.

ALLOTMENT, ETC., OF THE JUSTICES

OF THE

SUPREME COURT OF THE UNITED STATES,

AS MADE MAY 2, 1881, AND SUBSEQUENTLY MODIFIED BY THE CHIEF JUSTICE, UPON THE APPOINTMENT OF MR. JUSTICE MATTHEWS, WHOSE COMMISSION BEARS DATE MAY 12, 1881.

NAME OF THE JUSTICE, AND STATE FROM WHENCE APPOINTED.	NUMBER AND TERRITORY OF THE CIRCUIT.	DATE OF COMMISSION, AND BY WHOM APPOINTED.
CHIEF JUSTICE.	FOURTH.	1874.
HON. M. R. WAITE, Ohio.	MARYLAND, WEST VIRGINIA, VIRGINIA, N. CAROLINA, AND S. CAROLINA.	Jan. 21. PRESIDENT GRANT.
ASSOCIATES.	FIRST.	1877.
HON. J. M. HARLAN, Kentucky.	MAINE, NEW HAMPSHIRE, MASSACHUSETTS, AND RHODE ISLAND.	Nov. 29. PRESIDENT HAYES.
	SECOND.	1872.
HON. WARD HUNT, New York.	NEW YORK, VERMONT, AND CONNECTICUT.	Dec. 11. PRESIDENT GRANT.
	THIRD.	1870.
HON. J. P. BRADLEY, New Jersey.	PENNSYLVANIA, NEW JERSEY, AND DELAWARE.	March 21. PRESIDENT GRANT.
	FIFTH.	1880.
HON. WM. B. WOODS, Georgia.	GEORGIA, FLORIDA, ALABAMA, MISSISSIPPI, LOUISIANA, AND TEXAS.	Dec. 21. PRESIDENT HAYES.
	SIXTH.	1881.
HON. STANLEY MATTHEWS, Ohio.	OHIO, MICHIGAN, KENTUCKY, & TENNESSEE.	May. 12. PRESIDENT GARFIELD.
	SEVENTH.	1877.
HON. J. M. HARLAN, Kentucky.	INDIANA, ILLINOIS, AND WISCONSIN.	Nov. 29. PRESIDENT HAYES.
	EIGHTH.	1862.
HON. S. F. MILLER, Iowa.	MINNESOTA, IOWA, MISSOURI, KANSAS, ARKANSAS, NEBRASKA, AND COLORADO.	July 16. PRESIDENT LINCOLN.
	NINTH.	1863.
HON. S. J. FIELD, California.	CALIFORNIA, OREGON, AND NEVADA.	March 10. PRESIDENT LINCOLN.

MEMORANDA.

THE resolutions adopted at a meeting of the Bar held Dec. 20, 1880, to take action on the retirement of MR. JUSTICE STRONG from the Bench (102 U. S. ix), were transmitted to him with the following letter: —

SUPREME COURT OF THE UNITED STATES,
Dec. 23, 1880.

DEAR JUDGE STRONG, — We have the pleasure of handing you, with this, a copy of the resolutions of the Bar, adopted on the occasion of your retirement from judicial life, and of the proceedings in court when the Attorney-General asked that they might be entered on our records. From this you will see how much your absence from the Bench is regretted by those who have so long been accustomed to consider your judgments. Great, however, as is their loss, we cannot but consider ours greater. We already feel that we are no longer to have the benefit in our consultations of your careful investigation of facts, your nice discrimination in the application of principles, and your useful criticisms, always worthy of attention, but never giving offence. Your uniform kindness and courtesy towards all will never be forgotten.

We are glad to know that, although you are not to be with us longer on the Bench, you will keep your residence in Washington, and that the pleasures of personal intercourse with you and the members of your estimable family, which we have so much enjoyed, need not be interrupted.

That you may live long to enjoy the honors which are so deservedly yours is the sincere wish of your friends and former associates.

M. R. WAITE, JOSEPH P. BRADLEY,
N. H. SWAYNE, WARD HUNT,
SAMUEL F. MILLER, JOHN M. HARLAN.
STEPHEN J. FIELD,

A MEETING of the members of the Bar of the Supreme Court of the United States was held in the court-room Jan. 31, 1881, to take action touching the resignation of MR. JUSTICE SWAYNE. HON. SAMUEL SHELLABARGER was elected chairman, and MR. JAMES H. MCKENNEY, clerk of the court, secretary. A committee on resolutions, consisting of MR. PHILIP PHILLIPS, MR. GEORGE H. WILLIAMS, MR. RICHARD T. MER-

RICK, MR. ELLIOTT F. SHEPARD, and MR. J. HUBLEY ASHTON, was appointed by the chairman; and they, through MR. PHILLIPS, reported the following resolutions, which were adopted: —

Resolved, That the members of the Bar have learned, with deep regret, that, in the opinion of MR. JUSTICE SWAYNE, the time has arrived when he should retire from the labors and duties of the Bench, which he has so long adorned.

Resolved, That at the conclusion of his long and honorable career, the Bar deem it alike their duty and their privilege to express their sentiments of sincere respect for MR. JUSTICE SWAYNE, which have been inspired by the large capacity, the full and accurate learning, the patient and persistent investigation, the anxious desire to do justice, the genial and benevolent courtesy he has uniformly accorded to the members of the Bar, which have distinguished him throughout the long period of his service on the Bench of the Supreme Court.

Resolved, That the Attorney-General be requested to present these resolutions to the Court, and ask that they be entered on its minutes, and communicated to MR. JUSTICE SWAYNE.

MR. ATTORNEY-GENERAL DEVENS, in presenting the resolutions, addressed the Court as follows: —

May it please your Honors, — The members of the Bar were aware last Monday, when MR. JUSTICE SWAYNE delivered the opinion, the preparation of which had been intrusted to him, that they were listening to his words for the last time in this place. His retirement, in advanced life indeed, yet with unimpaired powers, is an event that they would not willingly pass without proper expression of the respect in which they hold his eminent public services, and of the honor and love which they bear to him personally.

Nineteen years have passed since he became a Justice of this Court. With one exception, — the senior Associate Justice, detained from us during this term by a protracted and distressing illness, — all who originally sat with him are gone. While no "cold gradations of decay" have given admonition of the necessity of repose, he has deemed it wiser to seek it.

His judicial life includes two great historic periods, one the supplement and consequent of the other. The novelty and importance of the questions that were at once pressed upon the attention of the Court by the civil war will be readily admitted when we remember that they concerned all the rights of belligerents, of confiscation, prize, blockade, and non-intercourse. The vast expenditures required new systems and modes of raising revenue, and the legislation by which it was sought to meet the exigency became here, of necessity, the subject of inquiry and interpretation.

His last opinion considers fully the important subject of the income tax imposed by the United States, and defines clearly and authoritatively the meaning of "direct taxes," as the term is used in the Constitution.

At the close of the war came the period of reconstruction. As pointed out by MR. JUSTICE SWAYNE himself, it was sixty-one years since any amendment of the Constitution had been made. All the earlier amendments had been prompted by the anxiety of the States lest their autonomy should be invaded by the Federal Government; but a time had arrived when it was clearly necessary that rights acquired and results determined by the civil war should be placed under the guardianship of the Federal Government; and this was done by three constitutional amendments.

The great power possessed by this Court, that of declaring a law, which had the sanction of all the forms of legislation, void, because in violation of the Constitution, had been exercised before this era in but the two instances of *Marbury* v. *Madison* and *Scott* v. *Sanford*. But there followed upon the amendments, and the consequent legislation, a large series of constitutional inquiries which are by no means concluded.

The ability, the learning, the acquirements, the ready capacity to acquire, the calm judgment and the sound common sense of MR. JUSTICE SWAYNE caused his influence to be everywhere felt in all the various stages of these great judicial debates, in which he bore his full share.

His opinions, which will be found in more than one third of the volumes of the Reports of this Court, commencing with the first of Black and extending through the twelfth of Otto — some thirty-seven volumes — are the enduring monument of his honestly earned fame as a jurist.

Such a fame may appear to the casual observer less brilliant than that of the orators, the soldiers, and the statesmen who were his contemporaries when it was won; yet it is not less dear, nor less valuable, in the eyes of every thoughtful lover of the institutions of this Republic.

The singularly amiable disposition and cordial manner of MR. JUSTICE SWAYNE were irresistibly attractive to all who practised before him. He had a patience which was proof against dulness. He would listen after he himself was satisfied, in order that counsel might feel they had been fully heard.

I have not spoken of his anxiety to do always what was just and right. Happily I stand before a tribunal which has endured nearly an hundred years, upon no member of which was there ever the imputation that he did not mean to deal justly, and to do the right as it was given him to see the right. It was one of MR. JUSTICE SWAYNE'S strongest characteristics.

In the fine chapter of the Old Testament which describes the farewell of the aged Samuel to his people, ruler, priest, and judge though he was, he desires to know, before he parts with his power to Saul, if he has done wrong to any man, that he may then rectify it. "I am old and gray-headed," says he; "behold, here I am: witness against me before the Lord and before his anointed; whose ox have I taken? or whose ass have I taken? or whom have I defrauded? Whom have I oppressed? or of whose hands have I received any bribe to blind mine eyes therewith?" And the people answered that, as the Lord was their witness, he was no such man.

Sure I am that should the distinguished magistrate who retires from the Bench ask, "Who is there that has stood before me to whom I have not striven to do equal and exact justice?" the answer would be like that of the Hebrew people to the royal judge of Israel: "There is no such man."

In his honorable retirement, consoled by those literary studies which have long been his delight, and by the dearer comfort of friends and family, the good wishes of all will go with him. As he may look back to the life that is past without regret, so he may look forward with serenity and confidence.

MR. CHIEF JUSTICE WAITE replied as follows: —

The resolutions of the Bar and your remarks, MR. ATTORNEY-GENERAL, are no more than is due to the occasion, and we take pleasure in directing that they be entered on our minutes. MR. JUSTICE SWAYNE took his seat here at the beginning of the late civil war, when the Chief Justice was considerably more than

eighty years of age, and four out of the five of the associates were either over or but little under seventy. He came fresh from a large and successful practice at the Bar, and brought with him an unusual familiarity with adjudged cases, and settled habits of labor and research. As might be expected, he soon became one of the most useful members of the Court, and took an active and leading part in all its work. During the nineteen years of his judicial life, both public and constitutional law have been presented to the Court in a great variety of phases, and each successive term brought its new cases and its consequent new questions. What part he bore in this important service and how well he bore it is best shown in the pages of the thirty-seven volumes of our reports, which have been filled since he came on the Bench. Being favored with uninterrupted good health and great capacity for endurance, he has rarely been absent from his seat here or in the consultation room when required, and never except from necessity. His record as a judge is consequently the record of the Court during his service, and in his voluntary retirement he can have the satisfaction of feeling that his judgments here and elsewhere have been as he believed to be right. If at times he differed from his associates, he could always give a reason for what he did. His courtesy of manner on and off the Bench will never be forgotten; and he carries with him, as he leaves the Court, the esteem of every one of his associates. It has been his good fortune to be not only a student of the law, but of general literature as well. He has always been a welcome guest wherever he has gone; and we hope he may live long to enjoy the reputation he has won, the society of his family and friends, and the pleasure of his books.

The resolutions were transmitted to MR. JUSTICE SWAYNE with the following letter: —

WASHINGTON, Feb. 24, 1881.

DEAR BROTHER SWAYNE, — Your retirement from the Bench at this time, when we are being deprived of the counsels of several other justices with whom we have had such long and pleasant association, is peculiarly trying to your brethren who remain.

We not only heartily join in the expressions of respect and regret which are so well conceived in the address of the Attorney-General and Resolutions of the Bar, a copy of which accompanies this letter; but we desire to communicate to you our own personal sorrow at the severance of those pleasant and harmonious ties which have so long united us.

We feel how greatly we shall miss the aid of your profound and various learning, ever ready at call, ever instructive and apposite to the discussion in hand; and shall equally miss the cheerful flow of your unfailing courtesy and spirits.

Our earnest wish is, that you may long enjoy the happiness which justly comes to vigorous age adorned with the wealth and graces of literature, surrounded by the charms of appreciative companionship and devoted affection.

Ever and sincerely, your friends,

(Signed) M. R. WAITE, WARD HUNT,
SAM. F. MILLER, JOHN M. HARLAN,
STEPHEN J. FIELD, W. B. WOODS.
JOSEPH P. BRADLEY,

Hon. NOAH H. SWAYNE.

AMENDMENT TO GENERAL RULES.

Amendment to Rule 8.

Ordered, That the 8th Rule of this Court be amended by adding thereto the following paragraph, viz.:—

"(6.) The record in causes of admiralty and maritime jurisdiction, when, under the requirements of law, the facts have been found in the court below, and our power of review is limited to the determination of questions of law arising on the record, shall be confined to the pleadings, the findings of fact and conclusions of law thereon, the bills of exceptions, the final judgment or decree, and such interlocutory orders and decrees as may be necessary to a proper review of the case."

[Promulgated May 2, 1881.]

RULES OF PRACTICE IN ADMIRALTY.

ADDITIONAL RULE.

Rule 58.

All the preceding rules and regulations for proceeding in cases where the owner or owners of a ship or vessel shall desire to claim the benefit of limitation of liability provided for in the act of Congress in that behalf, shall apply to the circuit courts of the United States where such cases are or shall be pending in said courts upon appeal from the district courts.

[Promulgated March 30, 1881.]

Amendment to Rule 52.

Ordered, That the 52d Rule in Admiralty be amended by adding thereto the following paragraph, viz.:—

"(3.) Hereafter, in making up the record to be transmitted to the Circuit Court on appeal, the clerk of the District Court shall omit therefrom any of the pleading, testimony, or exhibits which the parties, by their proctors, shall, by written stipulation, agree may be omitted; and such stipulation shall be certified up with the record."

[Promulgated May 2, 1881.]

TABLE OF CASES.

	Page
Adam *v.* Norris	591
"Adriatic," The	730
Alexander, Bouldin *v.*	330
Alexander, Dennison *v.*	522
Allen, County of Morgan *v.*	498
Allen *v.* County of Morgan	515
Allen *v.* Louisiana	80
Arms Company, Oscanyan *v.*	261
Arthur, Fisk *v.*	431
Arthur, Fleitman *v.*	597
Arthur, Flegenheim *v.*	597
Arthur *v.* Jacoby	677
Arthur, Swan *v.*	597
Ashburner *v.* California	575
Babbitt *v.* Clark	606
Baker, Humphrey *v.*	736
Baldwin, Railroad Company *v.*	426
Ballou, County of Jasper *v.*	745
Bamberger *v.* Terry	40
Bangs, Insurance Company *v.*	435
Bangs, Life Insurance Company *v.*	780
Barber *v.* Priest	293
Barney *v.* Latham	205
Barret, Water-Works Company *v.*	516
"Benefactor," The	239
Blake *v.* McKim	336
Blake *v.* United States	227
Board of Liquidation, Durkee *v.*	646
Bondurant *v.* Watson	281

Page
Bondurant, Tutrix *v.* Watson 278
Bonham *v.* Needles 648
Boogher *v.* Insurance Company 90
Bouldin *v.* Alexander 330
Brown *v.* Slee 828
Burrage, Unity *v.* 447
Burtis, *Ex parte* 238

Caldwell, Weitzel *v.* 344
California, Ashburner *v.* 575
Chicago *v.* Tilley 146
Chicot, County of, *v.* Lewis 164
City Bank, National Bank *v.* 668
"Civilta" The, and the "Restless" 699
Claflin, Williams *v.* 753
Clark, Babbitt *v.* 606
Clark *v.* Killian 766
Clark, Weightman *v.* 256
Cluss, District of Columbia *v.* 705
Coddington *v.* Railroad Company 409
Collins, Peck *v.* 660
Columbia, District of, *v.* Cluss 705
Commissioners, Pennock *v.* 44
Commissioners, Railroad Company *v.* 1
"Connecticut," The 710
"Connemara," The 754
Cook, County of, Tilley *v.* 155
Cook *v.* Lillo 792
Corbin, Manufacturing Company *v.* 786
County of Chicot *v.* Lewis 164
County of Cook, Tilley *v.* 155
County of Jasper *v.* Ballou 745
County of Monroe, Wall *v.* 74
County of Morgan, Allen *v.* 515
County of Morgan *v.* Allen 498
County of Ouachita *v.* Wolcott 559
County of Tipton *v.* Edmunds 540
County of Tipton *v.* Locomotive Works 523
County of Tipton *v.* Norton 540
County of Wilson *v.* National Bank 770
Crouch *v.* Roemer 797
Cucullu *v.* Hernandez 105

Page
Delaware, Neal *v.* 370
Dennick *v.* Railroad Company 11
Dennison *v.* Alexander 522
Dewey, Folsom *v.* 738
Dewey, Moyer *v.* 301
Dietzsch *v.* Huidekoper 494
District of Columbia *v.* Cluss 705
Drew, Western North Carolina Railroad Company *v.* 118
Dubuclet *v.* Louisiana 550
Durkee *v.* Board of Liquidation 646

Edmunds, County of Tipton *v.* 540
Edwards *v.* United States 471
Ellery, Seven Hickory *v.* 423
Eureka Mining Company, Richmond Mining Company *v.* . . 839
Ex parte Burtis 238
Ex parte Railway Company 794

Falconer, Railroad Company *v.* 821
Fisk *v.* Arthur 431
Fisk, Green *v.* 518
Fleitman *v.* Arthur 597
Flegenheim *v.* Arthur 597
Florida Central Railroad Company *v.* Schutte 118
Folger *v.* United States 30
Folsom *v.* Dewey 738
Francklyn *v.* Sprague 613
Frank, Ohio *v.* 697

Gaines, Wilson *v.* 417
Green *v.* Fisk 518
Grinnell *v.* Railroad Company 739

Hall *v.* Wisconsin 5
Harter *v.* Kernochan 562
Hernandez, Cucullu *v.* 105
Hinckley *v.* Morton 764
Hough, United States *v.* 71
Hoyt *v.* Sprague 613
Huidekoper, Dietzsch *v.* 494
Huidekoper, Kern *v.* 485
Humphrey *v.* Baker 736

Page
"Illinois" The 298
Indianapolis, Kennedy *v.* 599
Insurance Company *v.* Bangs 435
Boogher *v.* 90
v. Kiger 352
National Bank *v.* 783
v. Nelson 544
School District *v.* 707
v. Stinson 25
Iron Company, Lincoln *v.* 412

Jacksonville, Pensacola, and Mobile Railroad Company *v.* Schutte 118
Jacoby, Arthur *v.* 677
Jarrolt *v.* Moberly 580
Jasper, County of, *v.* Ballou 745
Jones *v.* Van Benthuysen 87
Jones *v.* Walker 444
Johnston *v.* Laflin 800

Kayser, Weitzel *v.* 344
Kemp, Smelting Company *v.* 666
Kennedy *v.* Indianapolis 599
Kennicott, Supervisors *v.* 554
Kern *v.* Huidekoper 485
Kernochan, Harter *v.* 562
Kiger, Insurance Company *v.* 352
Kilbourn *v.* Thompson 168
Killian, Clark *v.* 766
Kimball, National Bank *v.* 732
Knowlton, Spring Company *v.* 49

Laflin, Johnston *v.* 800
Land Company *v.* Saunders 316
Latham, Barney *v.* 205
Lewis, County of Chicot *v.* 164
Life Insurance Company *v.* Bangs 780
Lillo, Cook *v.* 792
Lincoln *v.* Iron Company 412
Liquidation, Board of, Durkee *v.* 646
Locomotive Works, County of Tipton *v.* 523
Louisiana, Allen *v.* 80

Page

Louisiana, Dubuclet *v.* 550
Louisiana *v.* New Orleans 521
Louisiana *v.* United States 289
Louisiana, Williams *v.* 637
Lye, Stout *v.* 66

McCarthy *v.* Provost 673
McKim, Blake *v.* 336
McLure, Terry *v.* 442
Manufacturing Company *v.* Corbin 786
Miles *v.* United States 304
Mitchell *v.* Overman 62
Moberly, Jarrolt *v.* 580
Monroe, County of, Wall *v.* 74
Morgan, County of, Allen *v.* 515
Morgan, County of, *v.* Allen 498
Morton, Hinckley *v.* 764
Mount, Steamship Company *v.* 239
Moyer *v.* Dewey 301
Mudge, Wilmot *v.* 217

National Bank *v.* City Bank 668
County of Wilson *v.* 770
v. Insurance Company 783
v. Kimball 732
v. Whitney 99
National Home, Yates *v.* 674
Neal *v.* Delaware 370
Needles, Bonham *v.* 648
Nelson, Insurance Company *v.* 544
New Orleans, Louisiana *v.* 521
New Orleans, Wolff *v.* 358
Norton, County of Tipton *v.* 540
Norris, Adam *v.* 591

Ohio *v.* Frank 697
Oscanyan *v.* Arms Company 261
Ostrum, Wicke *v.* 461
"Othello," The 710
Ouachita, County of, *v.* Wolcott 559
Overman, Mitchell *v.* 62

Page
Peck *v.* Collins 660
Penniman's Case 714
Pennock *v.* Commissioners 44
Perrine, Thompson *v.* 806
Prewit *v.* Wilson 22
Priest, Barber *v.* 293
Provost, McCarthy *v.* 673

Quigley, United States *v.* 595

Rabe, Weitzel *v.* 340
Railroad Companies *v.* Schutte 118
Railroad Company *v.* Baldwin 426
Coddington *v.* 409
v. Commissioners 1
Dennick *v.* 11
v. Falconer 821
Grinnell *v.* 739
v. United States 703
Wardell *v.* 651
v. Weeks 821
Whitsitt *v.* 770
Railway Company, *Ex parte* 794
Railway Company *v.* Sprague 756
Relfe *v.* Rundle 222
"Restless," The, and the "Civilta" 699
Richmond Mining Company *v.* Eureka Mining Company . . 839
"Richmond," The 540
Roemer, Crouch *v.* 797
Rundle, Relfe *v.* 222

Saunders, Land Company *v.* 316
Schaumburg *v.* United States 667
School District *v.* Insurance Company 707
Schutte, Florida Central Railroad Company *v.* 118
Schutte, Jacksonville, Pensacola, and Mobile Railroad Company *v.* 118
Schutte, Railroad Companies *v.* 118
Seven Hickory *v.* Ellery 423
Sharp *v.* Stamping Company 250
Slee, Brown *v.* 828
Smelting Company *v.* Kemp 666

Page
Sprague, Francklyn *v.* 613
Sprague, Hoyt *v.* 613
Sprague, Railway Company *v.* 756
Spring Company *v.* Knowlton 49
Stamping Company, Sharp *v.* 250
Steamship Company *v.* Mount 239
Steamship Company *v.* United States 721
"Stevens, S. A." The 710
Stinson, Insurance Company *v.* 25
Stout *v.* Lye 66
Supervisors *v.* Kennicott 554
Swan *v.* Arthur 597

Terry, Bamberger *v.* 40
Terry *v.* McLure 442
Thacher's Distilled Spirits 679
The "Adriatic" 730
The "Benefactor" 239
The "Connecticut" 710
The "Connemara" 754
The "Civilta" and the "Restless" 699
The "Illinois" 298
The "Othello" 710
The "Richmond" 540
The "S. A. Stevens" 710
Thompson, Kilbourn *v.* 168
Thompson *v.* Perrine 806
Thompson *v.* United States 480
Tilley, Chicago *v.* 146
Tilley *v.* County of Cook 155
Tipton, County of, *v.* Edmunds 540
Tipton, County of, *v.* Locomotive Works 523
Tipton, County of, *v.* Norton 540
Todd, Ward *v.* 327

United States, Blake *v.* 227
Edwards *v.* 471
Folger *v.* 30
v. Hough 71
Louisiana *v.* 289
Miles *v.* 304
v. Quigley 595

Page
United States, Railroad Company *v.* 703
Schaumburg *v.* 667
v. Steamship Company 721
Thompson *v.* 480
Unity *v.* Burrage 447

Van Benthuysen, Jones *v.* 87
Virginia, Webber *v.* 344

Wade, Walnut *v.* 683
Walker, Jones *v.* 444
Wall *v.* County of Monroe 74
Walnut *v.* Wade 683
Ward *v.* Todd 327
Wardell *v.* Railroad Company 651
Water-Works Company *v.* Barret 516
Watson, Bondurant *v.* 281
Watson, Bondurant, Tutrix *v.* 278
Webber *v.* Virginia 344
Weeks, Railroad Company *v.* 821
Weightman *v.* Clark 256
Weitzel *v.* Caldwell 344
Weitzel *v.* Kayser 344
Weitzel *v.* Rabe 340
Western North Carolina Railroad Company *v.* Drew . . . 118
Whitney, National Bank *v.* 99
Whitsitt *v.* Railroad Company 770
Wicke *v.* Ostrum 461
Williams *v.* Claflin 753
Williams *v.* Louisiana 637
Wilmot *v.* Mudge 217
Wilson, County of, *v.* National Bank 770
Wilson *v.* Gaines 417
Wilson, Prewit *v.* 22
Wisconsin, Hall *v.* 5
Wolcott, County of Ouachita *v.* 559
Wolff *v.* New Orleans 358

Yates *v.* National Home 674

TABLE OF CASES

CITED BY THE COURT.

	PAGE
Adams & Co. *v.* Daunis, 29 La. Ann. 315	289
Anderson *v.* Dunn, 6 Wheat. 204	196
Andrews *v.* Jones, 10 Ala. 400	25
Anonymous, 10 Paige (N. Y.), 20	69
Arnold *v.* State, 53 Ga. 574	312
——— *v.* ——— 23 Ind. 170	312
Astley *v.* Reynolds, 2 Stra. 915	66
Atkinson *v.* M. & C. Railroad Co., 15 Ohio St. 21	709
Aurora City *v.* West, 7 Wall. 82	696
Baker *v.* Humphrey, 101 U. S. 494	736
Ball *v.* Langles, 102 U. S. 128	792
Bank *v.* Lanier, 11 Wall. 369	804
——— *v.* Turnbull & Co., 16 Wall. 190	287
Bank of Rome *v.* Village of Rome, 18 N. Y. 38	812
Bank of United States *v.* Weisiger, 2 Pet. 481	66
Bank of Utica *v.* Smalley, 2 Cow. (N. Y.) 770	804
Barney *v.* Latham, 103 U. S. 205	337
Barrow *v.* Barrow, 2 Dick. 504	24
——— *v.* Shields, 13 La. Ann. 776	113
Bass *v.* Hewitt, 15 Wis. 260	762
Baywater *v.* Richardson, 1 Ad. & E. 508	162
Beard *v.* Federy, 3 Wall. 478	593
Beaumont *v.* Barrett, 1 Moo. P. C. 59	187
Beauregard *v.* City of New Orleans, 18 How. 497	289
Beaver *v.* Taylor, 93 U. S. 46	73, 98
Beers *v.* Haughton, 9 Pet. 329	720
Belleville, &c. Railroad Co. *v.* Gregory, 15 Ill. 20	458, 692
Belsham *v.* Percival, 8 Hare, 157, 2 Coop. 176	66
Benbow *v.* Iowa City, 7 Wall. 313	484
Benson *v.* Heathorn, 1 You. & Col. C. C. 326	658
Binz *v.* Weber, 81 Ill. 288	458, 692
Blaisdell *v.* Harris, 52 N. H. 191	66
Bliven *v.* New England Screw Co., 23 How. 420	162
Board of Commissioners of Knox County *v.* Aspinwall, 24 How. 376	483
Bondurant, Tutrix, *v.* Watson, 103 U. S. 278	285
Bone *v.* Eckless, 5 H. & N. 925	59
Bonin *v.* Durand, 2 La. Ann. 776	113
Boom Company *v.* Patterson, 98 U. S. 403	492
Brass Crosby's Case, 3 Wils. 188	183
Briges *v.* Sperry, 95 U. S. 401	286
Bronson *v.* Kinzie, 1 How. 311	720
Brown *v.* Sadler, 16 La. Ann. 206	114
——— *v.* State, 52 Ga. 338	312
Buchanan *v.* Litchfield, 102 U. S. 278	651
Buck *v.* Colbath, 3 Wall. 324	491
Budd *v.* State, 3 Hum. (Tenn.) 483	526
Burdett *v.* Abbott, 14 East, 1	183
Burnham *v.* Morrissey, 14 Gray (Mass.), 226	199
——— *v.* Webster, 5 Mass. 266	455
Burr *v.* Des Moines Company, 1 Wall. 99	556
Burwell *v.* Mandeville's Executor, 2 How. 560	446
Bustard *v.* Gates and Wife, 4 Dana (Ky.), 429	441
Butler *v.* The Regents of the University, 32 Wis. 124	9
Butz *v.* City of Muscatine, 8 Wall. 575	484
Cameron *v.* State, 14 Ala. 546	311
Campbell *v.* Boyreau, 21 How. 223	95, 556
——— *v.* Branch, 4 Jones (N. C.), L. 313	323
——— *v.* Misier, 4 Johns. (N. Y.) Ch. 342	66
Campion *v.* Cotton, 17 Ves. Jr. 264	24

Carrol *v.* Green, 92 U. S. 509 443
Case of the Sewing-Machine Companies, 18 Wall. 553 210, 338
Case of the Sheriff of Middlesex, 11 Ad. & E. 273 183
Cayford's Case, 7 Me. 57 311
City of Memphis *v.* The Memphis Water Co., 5 Heisk. (Tenn.) 495 526
Clark *v.* City of Rochester, 13 How. (N. Y.) Pr. 204 816
——— *v.* Iowa City, 20 Wall. 583 696
Clarke *v.* Roystone, 13 Mee. & W. 752 162
Clay *v.* Smith, 3 Pet. 411 66
Cleggs *v.* School District, 8 Neb. 178 709
Clinton *v.* Englebrecht, 13 Wall. 434 310
Cockfield *v.* Farley, 21 La. Ann. 521 112
Coffin *v.* Coffin, 4 Mass. 1 203
Collier *v.* His Creditors, 12 Rob. (La.) 398 112
Collinson *v.* Lester, 1 Jur. N. S. 835 66
Columbia Insurance Co. *v.* Lawrence, 2 Pet 25 29
Commercial Bank of Buffalo *v.* Kortright, 22 Wend. (N. Y.) 348 804
Commissioners of Knox County *v.* Aspinwall, 21 How. 539 455
Commissioners *v.* Sellew, 99 U. S. 624 484
Commonwealth *v.* Jackson, 11 Bush (Ky.), 679 312
——— *v.* McCurdy, 5 Mass. 324 455
——— *v.* Murtagh, 1 Ashm. (Pa.) 272 311
——— *v.* Springfield, 7 Mass. 9 455
——— *v.* Webster, 5 Cush. (Mass.) 295 312
Cooper *v.* Town of Thompson, 13 Blatchf. 434 816
Coppell *v.* Hall, 7 Wall. 542 208
Cotton *v.* Thurland, 5 T. R. 405 50
County Court of St. Louis County *v.* Griswold, 58 Mo. 175 587
County of Livingston *v.* Darlington, 101 U. S. 411 570
County of Mobile *v.* Kimball, 102 U. S. 691 351
County of Moultrie *v.* Savings Bank, 92 U. S. 631 827
County of Scotland *v.* Thomas, 94 U. S. 682 533
County of Warren *v.* Marcy, 97 U. S. 96 820
Cox *v.* McIntyre, 6 La. Ann. 470 794
——— *v.* Rawley, 12 Rob. (La.) 273 794
Craig *v.* The State of Missouri, 4 Pet. 410 267
Crawford County *v.* Wilson, 7 Ark. 214 79
Cromwell *v.* County of Sac, 94 U. S. 351 71, 782
——— *v.* ———, 96 U. S. 51 702
Cumber *v.* Wane, 1 Stra. 426 66
Cummings *v.* National Bank, 101 U. S. 153 735
Currier *v.* Lowell, 16 Pick. (Mass.) 170 66
Cushman *v.* Smith, 34 Me. 247 603

Davies *v.* Davies, 9 Ves. Jr. 461 66
Davis *v.* Gray, 16 Wall. 203 11
Derby *v.* Johnson, 21 Vt. 17 155
Donnelly *v.* State, 2 Dutch. (N. J.) 601 312
Doyle *v.* Falconer, Law Rep. 1 P. C. 328 189
Drury *v.* Cross, 7 Wall. 299 658
Duchess of Kingston's Case, 20 How. St. Tr. 355 311

Edgerton and Others *v.* Huff, 26 Ind. 35 602
Edson *v.* Weston, 7 Cow. (N. Y.) 278 267
Edwards *v.* United States, 103 U. S. 471 480
Eliason *v.* Henshaw, 4 Wheat. 225 161
Empire *v.* Darlington, 101 U. S. 87 533
Erlinger *v.* Boneau, 51 Ill. 94 458
European & North American Railway Co. *v.* Poor, 59 Me. 277 658
Evans *v.* De L'Isle, 24 La. Ann. 248 117
Ex parte Flippin, 94 U. S. 348 237
Ex parte Garland, 10 Ves. Jr. 109 446
Ex parte Hennan, 13 Pet. 259 231
Ex parte Railway Company, 101 U. S. 711 237
Ex parte Van Riper, 20 Wend. (N. Y.) 614 18
Ex parte Virginia, 100 U. S. 339 385, 408
Eyster *v.* Gaff, 91 U. S. 521 69

Fenton *v.* Hampton, 11 Moo. P. C. 347 189
Ferguson *v.* Glaze, 12 La. Ann. 667 113
Field *v.* Lelean, 30 L. J. Ex. 168 162
Fireman's Benevolent Association *v.* Lounsbury, 21 Ill. 511 458
Fisher *v.* Dabbs, 6 Yerg. (Tenn.) 119 526
Fitch *v.* Creighton, 24 How. 159 215
Fleckner *v.* United States, 8 Wheat. 338 103
Flint & Pere Marquette Railway Co. *v.* Dewey, 14 Mich. 477 658
Freeman *v.* Howe, 24 How. 450 491
——— *v.* Tranah, 12 C. B. 406 66
French, Trustee, *v.* Hay, 22 Wall. 250 493

Gaddis *v.* Richland County, 92 Ill. 119 751
Gaines *v.* Fuentes, 92 U. S. 10 492
Gardner *v.* The Collector, 6 Wall. 499 689
Gates *v.* Delaware County, 12 Iowa, 405 476
Gelpcke *v.* City of Dubuque, 1 Wall. 175 778
Gilbert *v.* Manchester Iron Co., 11 Wend. (N. Y.) 627 804
Giles *v.* State, 6 Ga. 276 312
Gillespie *v.* Moon, 2 Johns. (N. Y.) Ch. 585 549
Gilman *v.* Philadelphia, 3 Wall. 713 11
Godfrey *v.* Terry, 97 U. S. 171 443
Gold Washing and Water Company *v.* Keyes, 96 U. S. 199 286
Goodman *v.* Pocock, 15 Q. B. 576 154
Gordon *v.* Gordon, 3 Swans. 400 116
——— *v.* Longest, 16 Pet. 97 493
Gorham *v.* Springfield, 21 Me. 58 455
Graham *v.* Bayne, 18 How. 60 556
Grant *v.* National Bank, 97 U. S. 80 297
Graves *v.* Boston Marine Insurance Co., 2 Cranch, 444 549
Gray *v.* Brignardello, 1 Wall. 627 66
Great Luxembourg Railway Co. *v.* Magnay, 25 Beav. 586 658
Great Western Railway Co. *v.* Miller, 19 Mich. 305 18
Green *v.* Cobden, 4 Scott, 486 66
Greenleaf's Lessee *v.* Birth, 5 Pet. 132 777
Griswold *v.* Hill, 1 Paine, 484 66
Gronfier *v.* Puymirol, 19 Cal. 629 440

Hackett *v.* Ottawa, 99 U. S. 86 260
Hadwin *v.* Fisk, 1 La. Ann. 43 355
Haines *v.* Verret, 11 La. Ann. 122 113
Hall *v.* Rupley, 10 Pa. St. 231 155
Ham's Case, 11 Me. 391 311
Hankins *v.* Lawrence, 8 Blackf. (Ind.) 266 602
Harshman *v.* Bates County, 92 U. S. 569 586
Harter *v.* Kernochan, 103 U. S. 562 649
Harvey *v.* Tyler, 2 Wall. 328 73, 98
Harward *v.* St. Clair Drainage Co., 51 Ill. 130 259, 751
Hastelow *v.* Jackson, 8 Barn. & Cress. 221 59
Hatch *v.* Dana, 101 U. S. 205 509
Hazen *v.* Union Bank of Tennessee, 1 Sneed (Tenn.), 115 526
Henderson's Distilled Spirits, 14 Wall. 44 682
Henkle *v.* Royal Assurance Co., 1 Ves. Sen. 317 549
Henshaw *v.* Bissell, 18 Wall. 255 593
Herring *v.* Wickham, 29 Gratt. (Va.) 628 24
Hess *v.* Cole, 3 Zabr. (N. J.) 116 66
Hessler *v.* Drainage Commissioners, 53 Ill. 105 751
Hinckley *v.* Railroad Companies, 100 U. S. 153 764
Hoagland *v.* Moore, 2 Blackf. (Ind.) 167 155
Hoke *v.* Henderson, 4 Dev. (N. C.) L. 1 474
Holden *v.* Trust Company, 100 U. S. 72 698
Holding *v.* Pigott, 7 Bing. 465 162
Holland *v.* State of Florida, 18 Fla. 455 133
Holman *v.* Johnson, 1 Cowp. 341 269
Holroyd *v.* Marshall, 10 H. L. Cas. 191 625
Home Insurance Co. *v.* Stanchfield, 1 Dill. 424 783
Hope *v.* Hope, 8 De G., M. & G. 731 277
Horton *v.* Town of Thompson, 71 N. Y. 573 816
Howland *v.* Blake, 97 U. S. 624 548
Hutchinson *v.* Tatham, Law Rep. 8 C. P. 482 162

In re Holmes & Lissberger, 15 Blatchf. 170 219
Insurance Company *v.* Bangs, 103 U. S. 435 780
——— *v.* Comstock, 16 Wall. 258 610
——— *v.* Dunn, 19 Wall. 214 490
——— *v.* Morse, 20 Wall. 445 492
——— *v.* Pechner, 95 U. S. 183 285
——— *v.* Woodruff, 2 Dutch. (N. J.) 541 28
Irvine *v.* Withers, 1 Stew. (Ala.) 234 695

Jackson *v.* Chew, 12 Wheat. 162 289
——— *v.* McCall, 3 Cow. (N. Y.) 79 483
——— *v.* Rich, 7 Johns. (N. Y.) 194 483
Jerome *v.* McCarter, 21 Wall. 17 557, 753
Johnson *v.* Campbell, 49 Ill. 316 259
Johnston *v.* Jones, 1 Black, 209 73, 98
Jones *v.* Perry, 10 Yerg. (Tenn.) 59 526
Justices of Campbell County *v.* Knoxville & Kentucky Railroad Co., 6 Cold. (Tenn.) 598 777

Kearney *v.* Case, 12 Wall. 275 95
Kennedy *v.* Gibson, 8 Wall. 498 776
Kern *v.* Huidekoper, 103 U. S. 485 495
Kielly *v.* Carson and Others, 4 Moo. P. C. 63 187
Kingston *v.* Phelps, Peake, N. P. C. 299 161
Knowles *v.* Gas Light & Coke Company, 19 Wall. 58 198

Knowlton *v.* Congress & Empire Spring Co., 57 N. Y. 518 57, 61
Knoxville and Ohio Railroad Co. *v.* Hicks, 530

Lacaussade *v.* White, 7 T. R. 531 59
L. & N. Railroad Co. *v.* County Court of Davidson, 1 Sneed (Tenn.), 638 526
Langdon *v.* Goddard, 2 Story, 267 116
Larrison *et al. v.* Peoria, Atlanta, & Decatur Railroad Co. *et al.*, 77 Ill. 11 691
Lawrence *v.* Hodgson, 1 Y. & J. 368 66
Leavenworth, Lawrence & Galveston Railroad Co. *v.* United States, 92 U. S. 733 429
Leftwich *v.* Brown, 4 La. Ann. 104 117
Leonard, Administrator, *v.* The Columbia Steam Navigation Co., 21
Lincoln *v.* Claflin, 7 Wall. 132 73, 98
Loan Association *v.* Topeka, 20 Wall. 655 589
Lowell *v.* Boston & Lowell Railroad Corporation, 23 Pick. (Mass.) 24 60
Lowry *v.* Bourdieu, 2 Doug. 452 59
——— *v.* Inman, 46 N. Y. 119 18
Lyman *v.* United Insurance Co., 2 Johns. (N. Y.) Ch. 630 549

McCallie *v.* Mayor, &c., 3 Head (Tenn.), 317 526
McCarty *v.* Chicago, Rock Island, & Pacific Railroad Co., 18 Kan. 46 21
McKenna *v.* Fisk, 1 How. 241 18
McKinney *v.* Overton Hotel Co., 12 Heisk. (Tenn.) 104 532
Maclay *v.* Harvey, 90 Ill. 525 161
Madison County *v.* People, 58 Ill. 456 259
Magniac *v.* Thompson, 7 Pet. 348 24
Manufacturing Company *v.* Ladd, 102 U. S. 408 792
Marcy *v.* Township of Oswego, 92 U. S. 637 695
Marine Insurance Co. *v.* Hodgson, 7 Cranch, 332 783
Marquis of Townshend *v.* Stungroom, 6 Ves. Jr. 328 549
Marr *v.* Enloe, 1 Yerg. (Tenn.) 452 526
Marshal *v.* McCrea, 2 La. Ann. 79 117
Marshall *v.* Baltimore & Ohio Railroad Co., 16 How. 314 274
——— *v.* Silliman, 61 Ill. 218 751
Mason *v.* Haile, 12 Wheat. 370 717
Mayor *v.* Lord, 9 Wall. 409 484
——— *v.* Ray, 19 Wall. 468 78
Mayor, &c. of Baltimore *v.* Baltimore & Ohio Railroad Co., 6 Gill (Md.), 288 3
Meguire *v.* Corwine, 101 U. S. 108 276
Memphis City Railroad Co. *v.* Mayor & Aldermen of Memphis, 4 Cold. (Tenn.) 406 526
Merchants' Bank *v.* Gove, 15 Mart. (La.) N. S. 378 794
——— *v.* State Bank, 10 Wall. 604 265
Meriwether *v.* Garrett, 102 U. S. 472 368
Merritt *v.* Millard, 4 Keyes (N. Y.), 208 60
Millaudon *v.* Arnous, 3 Mart. (La.) N. S. 596 794
Miller *v.* Dale, 92 U. S. 473 593
——— *v.* Schneider & Zuberbier, 19 La. Ann. 300 355
Mills *v.* Mills, 40 N. Y. 543 275
Mimmack *v.* United States, 97 U.S. 426 237
Missouri, Kansas, & Texas Railway Co. *v.* Kansas Pacific Railway Co., 97 U. S. 491 429
Moffitt *v.* Garr, 1 Black, 273 663
Montgomery *v.* Elliott, 6 Ala. 701 695
Morgan *v.* Groff, 4 Barb. (N. Y.) 524 59
——— *v.* Louisiana, 93 U. S. 217 4, 421
Morgan County *v.* Thomas, 76 Ill. 120 509
Morse *v.* Rogers, 118 Mass. 573 322
Mostyn *v.* Fabrigas, 1 Cowp. 161 18
Moulton *v.* Trask, 9 Metc. (Mass.) 577 155
Mount *v.* Stokes, 4 T. R. 561 59
Murray *v.* Lardner, 2 Wall. 110 760
Mussina *v.* Cavazos, 6 Wall. 355 279

Nairn *v.* Prowse, 6 Ves. Jr. 752 24
National Bank *v.* Matthews, 98 U.S. 621 101
National Bank of North America *v.* Kirby, 108 Mass. 497 762
Nelson *v.* Fleming, 56 Ind. 310 602
Nerot *v.* Burnand, 4 Russ. 247 625
Newell *v.* Norton and Ship, 3 Wall. 257 543
New Portland *v.* New Vineyard, 16 Me. 69 455
Newton *v.* Commissioners, 100 U. S. 559 10
Nichol *v.* Mayor, &c., 9 Hum. (Tenn.) 252 526
Nichols *v.* Som. & Ken. Railroad Co., 43 Me. 359 603
Norris *v.* Jackson, 9 Wall. 125 688
Norwood's Case, 1 East, P. C. 470 311

Ober *v.* Gallagher, 93 U. S. 199 329
Officer *v.* Young, 5 Yerg. (Tenn.) 320 526
O'Leary *v.* County of Cook, 28 Ill. 534 458
Oliver *v.* Alexander, 6 Pet. 143 755
——— *v.* Piatt, 3 How. 333 215

Packet Company *v.* Keokuk, 95 U. S. 80 459, 716
Parsons *v.* Jackson, 99 U. S. 434 762

Patterson v. Kentucky, 97 U. S. 501 348
Payne v. Hornby, 25 Beav. 280, s. c. 4 Jur. N. S. 446 625
Pearson v. Grice, 6 La. Ann. 233 117
Pelton v. National Bank, 101 U. S. 143 735
Pennoyer v. Neff, 95 U. S. 714 198, 441
People v. Batchellor, 53 N. Y. 128 813
——— v. Bowen, 21 N. Y. 517 426
——— v. Breslin, 80 Ill. 423 458
——— v. Champion, 16 Johns. (N. Y.) 60 483
——— v. Collins, 19 Wend. (N. Y.) 56 483
——— v. Dupuyt, 71 Ill. 651 259
——— v. Mitchell, 35 N. Y. 551 812
——— v. Trustees of Schools, 78 Ill. 136 259
——— v. Weaver, 100 U. S. 539 735
Perallat v. Puech, 2 Mart. (La.) N. S. 672 794
Perry v. Wilson, 7 Mass. 393 66
Phinney v. Baldwin, 16 Ill. 108 698
Phœnix Insurance Co. v. Bailey, 13 Wall. 616 783
Pickering v. Fisk, 6 Vt. 102 18
Pierce v. Kimball, 9 Me. 54 455
Planché v. Colburn, 8 Bing. 14 154
Pleasants v. Fant, 22 Wall. 116 265, 678
Plummer v. People, 74 Ill. 361 692
Powder Company v. Powder Works, 98 U. S. 126 791
Poydras v. Turgeau, 14 Mart. (La.) N. S. 37 794
President and Trustees of the Town of Keithsburg v. Frick, 34 Ill. 405 752
Preston v. Dunn, 25 Ala. 507 440
Proprietors of Enfield v. Day, 11 N. H. 520 325

Quin v. State, 46 Ind. 725 312

Rafael v. Verelst, 2 W. Bl. 983 18
Railroad v. Sprayberry, 8 Bax. (Tenn.) 341 18
Railroad Companies v. Gaines, 97 U. S. 697 4
Railroad Company v. Fraloff, 100 U. S. 24 265
——— v. Grant, 98 U. S. 398 522
——— v. Mississippi, 102 U. S. 135 492
——— v. Schutte, 100 U. S. 644 136
——— v. Twombly, 100 U. S. 78 98
——— v. Whitton, 13 Wall. 270 492
——— v. Wiswall, 23 Wall. 507 610
Randon v. Toby, 11 How. 493 777
Regina v. Newton, 2 Moo. & R. 503 311
——— v. Upton, 1 Russell, Crimes, 218 311
Removal Cases, 100 U. S. 457 211, 337, 492, 567
Rex v. Bower, 1 Barn. & Cress. 585 474
——— v. Burder, 4 T. R. 778 474
——— v. Jones, 2 Stra. 1146 474
——— v. Lone, 2 Stra. 920 474
Rexford v. Knight, 11 N. Y. 308 603
Reynolds v. United States, 98 U. S. 145 310
Rhodes v. Hooper, 2 La. Ann. 356 117
Rich v. Lambert, 12 How. 347 755
Richardson v. New York Central Railroad Co., 98 Mass. 85 21
Robb v. Lessee of Irwin, 15 Ohio, 689 440
Robertson v. Cease, 97 U. S. 646 286
Robinson v. United States, 13 Wall. 363 162
Rogers v. The Marshal, 1 Wall. 644 98
Rubottom v. McClure, 4 Blackf. (Ind.) 505 602
Russell v. Baptist Theological Union, 73 Ill. 337 549
——— v. Dodge, 93 U. S. 460 791

San Antonio v. Mehaffy, 96 U. S. 312 458, 692
Sargeant v. Franklin Ins. Co., 8 Pick. (Mass.) 90 804
Sawyer v. Hoag, 17 Wall. 610 508
——— v. Upton, 91 U. S. 56 508
Schaeffer v. Bonham, 95 Ill. 378 571
Schulenberg v. Harriman, 21 Wall. 44 744
Scipio v. Wright, 101 U. S. 665 810
Seaver v. Bigelows, 5 Wall. 208 755
Secretary v. McGarrahan, 9 Wall. 298 485
Seyburn v. Deyris, 25 La. Ann. 483 113
Shelburne v. Inchiquin, 1 Bro. Ch. 338 549
Sheppard v. Johnson, 2 Hum. (Tenn.) 285 526
Shields v. Thomas, 17 How. 3 756
——— v. ———, 18 How. 253 215
Shirk v. Pulaski County, 4 Dill. 209 79
Skipp v. Harwood, 2 Swans. 586 624
Smith v. Ayres, 101 U. S. 320 445
——— v. Bickmore, 4 Taunt. 474 59
——— v. Bromley, 2 Doug. 696 60
——— v. Clarke, 12 Ves. Jr. 477 116
——— v. Sac County, 11 Wall. 139 763
Solomon v. Arthur, 102 U. S. 208 433
——— v. Commissioners of Cartersville, 41 Ga. 157 426
Springfield v. Wooster, 2 Cush. (Mass.) 62 66
Stansberry v. United States, 8 Wall. 33 38
State v. Baltimore & Ohio Railroad Co., 48 Md. 49 3
——— v. Britton, 4 McCord (S.C.), 256 311
——— v. Cincinnati, 20 Ohio St. 18 709

State *v.* Curators State University, 57 Mo. 178 587
——— *v.* Ferguson, 31 N. J. L. 107 474
——— *v.* Hilton, 3 Rich. (S. C.) 434 311
——— *v.* Libby, 44 Me. 469 311
——— *v.* McDonald, 25 Miss. 176 311
——— *v.* Nash, 7 Iowa, 347 312
——— *v.* Ostrander, 18 Iowa, 435 312
——— *v.* Seals, 16 Ind. 352 312
State Bank *v.* Cooper, 2 Yerg. (Tenn.) 599 526
State, *ex rel.* Belden, Attorney-General, *v.* Fagan, 22 La. Ann. 545 426
State, *ex rel.* Cothren, *v.* Lean, 9 Wis. 279 455
State, *ex rel.* Off, *v.* Smith, 14 Wis. 497 9
State, *ex rel.* Schnet, *v.* Murray, 28 Wis. 96 9
State of Florida *v.* Anderson, 91 U. S. 667 138
——— *v.* Florida Central Railroad Co., 15 Fla. 690 134
State Railroad Tax Cases, 92 U. S. 575 733
Sterry *v.* Arden, 1 Johns. (N. Y.) Ch. 261 24
Stetson *v.* Gurney, 17 La. 166 355
Stewart *v.* Salamon, 97 U. S. 361 737, 764, 765
Stickney *v.* Davis, 17 Pick. (Mass.) 169 66
Stimpson *v.* Baltimore & Susquehanna Railroad Co., 10 How. 329 556
Stockdale *v.* Hansard, 9 Ad. & E. 1 185
Stocken *v.* Dawson, 9 Beav. 239 625
Stratton *v.* Jarvis, 8 Pet. 4 755
Strauder *v.* West Virginia, 100 U S. 303 385, 551
Stringfellow *v.* Cain, 99 U. S. 610 738
Stuart *v.* Maxwell, 16 How. 150 433
Sturges *v.* Crowningshield, 4 Wheat. 122 717
Supervisors *v.* Kennicott, 94 U. S. 498 555, 765
——— *v.* United States, 4 Wall. 435 483
Supervisors of Schuyler County *v.* People, 25 Ill. 181 458, 750
Suydam *v.* Williamson, 24 How. 427 289
——— *v.* ———, 20 How. 427 556

Tappenden *v.* Randall, 2 Bos. & Pul. 467 59
Tate *v.* Bell, 4 Yerg. (Tenn.) 202 526
Taylor *v.* Bowers, 1 Q. B. D. 291 59
——— *v.* Carryl, 20 How. 583 491
——— *v.* Place, 4 R. I. 324 635
Tennessee *v.* Sneed, 96 U. S. 69 720
The Abbotsford, 98 U. S. 440 97, 300, 731
The Alabama and the Gamecock, 92 U. S. 695 703
The Baltimore, 8 Wall. 377 542
The Benefactor, 102 U. S. 214 731
The Hypodame, 6 Wall. 216 542
The Kansas Indians, 5 Wall. 737 48
The Lady Pike, 21 Wall. 1 542
The S. B. Wheeler, 20 Wall. 385 542
The Ship Marcellus, 1 Black, 414 542
The Wood Paper Patent, 23 Wall. 566 791
Thomas *v.* City of Richmond, 12 Wall. 349 60
——— *v.* County of Morgan, 59 Ill. 479 511
——— *v.* Harvie, 10 Wheat. 146 769
Thomas *et al. v.* County of Morgan, 39 Ill. 496 511
Thompson *v.* Lee County, 3 Wall. 327 696
——— *v.* Whitman, 18 Wall. 457 198
Thorington *v.* Smith, 8 Wall. 1 703
Thurston *v.* Thurston, 6 R. I. 296 635
Tooker *v.* Duke of Beaufort, 1 Burr. 746 66
Tool Company *v.* Norris, 2 Wall. 45 273
Town of Coloma *v.* Eaves, 92 U. S. 484 695
Town of Duanesburgh *v.* Jenkins, 57 N. Y. 177 813
Town of Genoa *v.* Woodruff, 92 U. S. 502 696
Town of South Ottawa *v.* Perkins, 94 U. S. 260 689
Town of Windsor *v.* Hallett, 97 Ill. 204 693
Township of Pine Grove *v.* Talcott, 19 Wall. 666 8
Trelawney *v.* Bishop of Winchester, 2 Burr. 219 66
Trimble *v.* Woodhead, 102 U. S. 647 303
Trueman *v.* Loder, 11 Ad. & E. 589 162
Truman's Case, 1 East, P. C. 470 311
Trustees of Dartmouth College *v.* Woodward, 4 Wheat. 518 10
Trustees of the Improvement Fund *v.* Jacksonville, Pensacola, & Mobile Railroad Co., 16 Fla. 708 134
Trustees, &c. *v.* People, 63 Ill. 290 259
Tucker *v.* Ferguson, 22 Wall. 527 744
——— *v.* Woods, 12 Johns. (N. Y.) 189 161
Tuttle *v.* Love, 7 Johns. (N. Y.) 469 161
Tyler *v.* Maguire, 17 Wall. 253 705

United States *v.* Babbit, 1 Black, 55 778
——— *v.* Boutwell, 17 Wall. 604 485
——— *v.* Buchanan, 8 How. 83 163
——— *v.* Eckford, 6 Wall. 484 667
——— *v.* Eliason, 6 Pet. 291 556

United States v. Hartwell, 6 Wall. 385 8
——— v. Hatch, 1 Pinn. (Wis.) 182 9
——— v. King, 7 How. 833 95
——— v. Murice, 2 Brock. 96 8
——— v. New Orleans, 98 U. S. 381 360
——— v. Wright, 1 McLean, 509 477
Unity v. Burrage, 103 U. S. 447 602
Upton v. Tribilcock, 91 U. S. 45 509
Utica Insurance Co. v. Kip, 8 Cow. (N. Y.) 20 60

Van Orsdall v. Hazard, 3 Hill (N. Y.), 243 474
Vansant v. Waddell, 2 Yerg. (Tenn.) 260 526
Villavaso v. Walker, 28 La. Ann. 712 115
Virginia v. Rives, 100 U. S. 313 385, 398, 402, 493, 551
Von Hoffman v. City of Quincy, 4 Wall. 535 360, 483, 720
Vroom v. Ditmas, 5 Paige (N. Y.), 528 66

Wall v. County of Monroe, 103 U. S. 74 560
Wallace v. McConnell, 13 Pet. 136 695
——— v. Tipton County 526
Walnut v. Wade, 103 U. S. 683 697
Warner v. Commonwealth, 2 Va. Cas. 595 311
Warren v. Mayor and Aldermen of Charlestown, 2 Gray (Mass.), 84 84
Water-works Company of Indianapolis v. Burkhart, 41 Ind. 364 602
Watkins v. Holman, 16 Pet. 25 635
Watson v. Bondurant, 30 La. Ann. 1, pt. 1 285
——— v. Murray, 23 N. J. Eq. 257 277
Weaver v. Maillot, 15 La. Ann. 395 704
Webb v. Alton Marine & Fire Insurance Co., 8 Ill. 225 161
Webster v. Upton, 91 U. S. 65 509, 804
Wells v. Supervisors, 102 U. S. 625 777
Welton v. State of Missouri, 91 U. S. 275 350
West v. Blake, 4 Blackf. (Ind.) 234 455
——— v. Skipp, 1 Ves. Sen. 239 625
White v. Franklin Bank, 22 Pick. (Mass.) 181 60
Whitely v. Martin, 3 Beav. 226 116
Whitney v. Cook, 99 U. S. 607 765
Wicks v. Stevens, 2 Woods, 312 792
Williams v. Louisiana, 103 U. S. 637 646
——— v. State, 44 Ala. 24 312
——— v. Town of Duanesburgh, 66 N. Y. 129 815
——— v. Town of Roberts, 88 Ill. 11 570
Williamson v. Berry, 8 How. 495 198
Wilson v. Salamanca, 99 U. S. 499 533
Winter v. State, 20 Ala. 39 312
Wolverton v. State, 16 Ohio, 173 311
Wood v. Edwards, 12 Johns. (N. Y.) 205 161
——— v. Keyes, 6 Paige (N. Y.), 418 66
——— v. McCann, 6 Dana (Ky.), 366 275
Woodward v. Michigan Southern & Northern Indiana Railroad Co., 10 Ohio St. 121 21
Worthington v. Mason, 101 U. S. 149 73

Yeats v. Pim, Holt N. P. 95 162
Young v. Rummell, 2 Hill (N. Y.), 478 207
——— v. Scott & Cage and Cavaroc, 25 La. Ann. 313 355

REPORTS OF THE DECISIONS

OF THE

SUPREME COURT OF THE UNITED STATES,

OCTOBER TERM, 1880.

RAILROAD COMPANY *v.* COMMISSIONERS.

103 U.S. 1
L.ed 359
146 295

1. Where a railroad company is, for the purpose of constructing and repairing its road, invested with the powers and privileges and subjected to the obligations contained in certain enumerated sections of the charter of another company which was exempt from taxation, — *Held*, that the grant does not include immunity from taxation.
2. *Railroad Companies* v. *Gaines* (97 U. S. 697) and *Morgan* v. *Louisiana* (93 id. 217) reaffirmed and applied to this case.

ERROR to the Court of Appeals of the State of Maryland.

The facts are stated in the opinion of the court.

Mr. William H. Tuck and *Mr. Montgomery Blair* for the plaintiff in error.

Mr. Henry Aisquith and *Mr. Charles J. M. Gwinn*, Attorney-General of Maryland, *contra*.

MR. CHIEF JUSTICE WAITE delivered the opinion of the court.

The Annapolis and Elk Ridge Railroad Company was incorporated by an act of assembly of Maryland, passed March 21, 1837. Sect. 5 of its charter is as follows: —

"And be it enacted, that the president and directors of the said company shall be, and they are hereby, invested with all the rights and powers necessary to the construction and repair of a

railroad from the city of Annapolis, to connect with the Baltimore and Washington railroad, not exceeding sixty feet in width, with as many sets of tracks as the said president and directors, or a majority of them, may think necessary; and for this purpose the said president and directors may have and use all the powers and privileges, and shall be subject to the same obligations, that are provided in the fourteenth, fifteenth, sixteenth, seventeenth, eighteenth, nineteenth, twentieth, twenty-first, twenty-second, and twenty-third sections of the aforesaid act, entitled 'An Act to incorporate the Baltimore and Ohio Railroad Company.'"

The capital stock of the company was fixed at $450,000, the State taking $300,000, on which a payment of at least six per cent per annum was to be guaranteed by the company. None of the sections of the charter of the Baltimore and Ohio Company referred to, except the eighteenth, have any special bearing on the present case. They related entirely to the powers and privileges necessary to the construction, operation, and maintenance of the road. Sect. 18, on which the case depends, is as follows: —

"And be it enacted, that the said president and directors, or a majority of them, shall have power to purchase with the funds of said company, and place on any railroad constructed by them under this act, all machines, wagons, vehicles, or carriages of any description whatsoever, which they may deem necessary or proper for the purposes of transportation on said road, and they shall have power to charge for tolls upon (and the transportation of persons) goods, produce, merchandise, or property of any kind whatsoever, transported by them along said railway from the city of Baltimore to the Ohio River, any sum not exceeding the following rates, viz.: On all goods, produce, merchandise, or property of any description whatsoever, transported by them from west to east, not exceeding one cent a ton per mile for toll, and three cents a ton per mile for transportation; on all goods, produce, merchandise, or property of any description whatsoever, transported by them from east to west, not exceeding three cents a ton per mile for tolls, and three cents a ton per mile for transportation, and for the transportation of passengers not exceeding three cents per mile for each passenger; and it shall not be lawful for any other company, or any person or persons whatsoever, to travel upon or use any of the roads of said company, or to transport persons, merchandise, produce, or property

of any description whatsoever, along said roads, or any of them, without the license or permission of the president and directors of said company; and that the said road or roads, with all their works, improvements, and profits, and all the machinery of transportation used on said road, are hereby vested in the said company, incorporated by this act, and their successors, forever; and the shares of the capital stock of the said company shall be deemed and considered personal estate, and shall be exempt from the imposition of any tax or burthen by the States assenting to this law."

Under the last clause of this section it was held at an early day, by the Court of Appeals of Maryland, that the property of the Baltimore and Ohio Company was exempt from taxation. *Mayor, &c. of Baltimore* v. *Baltimore & Ohio Railroad Co.*, 6 Gill (Md.), 288; *State* v. *Baltimore & Ohio Railroad Co.*, 48 Md. 49. In 1876, the General Assembly passed an act to provide for the assessment and taxation of railroad companies, and under that act the commissioners of Anne Arundel County proceeded to assess the property of the Annapolis and Elk Ridge Company. The object of the proceeding instituted in the court below was to vacate this assessment, on the ground that the property of the company was by its charter exempt from taxation. The Court of Appeals refused the relief asked, holding that no such exemption existed. To reverse that judgment the case has been brought here by writ of error.

We think the judgment below was right. Grants of immunity from taxation are never to be presumed. On the contrary, all presumptions are the other way, and, unless an exemption is clearly established, all property must bear its just share of the burdens of taxation. These principles are elementary, and should never be lost sight of in cases of this kind.

The Annapolis and Elk Ridge Company was "invested with all the rights and powers necessary to the construction and repair" of its railroad, and for that purpose was to "have and use all the powers and privileges," and be subject to the obligations, contained in the enumerated sections of the Baltimore and Ohio charter. Clearly this is not a grant of all the powers and privileges of the Baltimore and Ohio Company named in those sections, but only of such as were necessary to carry into effect the objects for which the new company was

incorporated. Such is the plain import of the language employed. Consequently, only such of the privileges of the old company could be enjoyed by the new as were appropriate to the work which the latter was authorized to do.

The power to construct and repair a railroad undoubtedly implies, in the absence of any restrictions, the power to use the road when constructed as railroads are ordinarily used. Such use is in general an incident to the ownership of that kind of property. The powers and privileges of the Baltimore and Ohio Company, therefore, which the new company was permitted to "have and use," were such as were necessary to the construction, repair, and use of its railroad. Exemption from taxation is not one of these privileges. It is undoubtedly a privilege, but not necessary either to the construction, repair, or operation of a railroad. We so held in the case of the Knoxville and Charleston Railroad Company (*Railroad Companies* v. *Gaines*, 97 U. S. 697), where the language of the charter was much like this. Our conclusion then was that the grant to one company of the rights and privileges of another, for the purpose of making and using a railroad, carried with it only such rights and privileges as were essential to the operations of the company, or, to use the language of Mr. Justice Field for the court in *Morgan* v. *Louisiana* (93 id. 217), the positive rights and privileges without which the road of the company could not be successfully worked.

It seems to us that case is conclusive of this. We cannot see that the claim of the company is at all strengthened by the fact that the State was to be the largest stockholder, and to some extent preferred in the division of profits. The corporation was not in that way made a part of the government. It had certain duties to the public to perform; but it was, notwithstanding the State's interest in its stock, just as much a private corporation as any other railroad company is. There are no more presumptions in its favor than any other railroad company with the same general powers and privileges can claim. The public ownership of the stock gave the company no more rights against the State than a private ownership would. The State was not, in any respect, "her own grantee." She granted a charter, and those who claim under her charter,

whether it be herself or some one else, must be content with what she granted in that way. Ordinarily the same rules of construction which are applied to other charters will be applied to such as this. The State, as a stockholder, must take what she, as sovereign, gave to the other stockholders, unless she, in express terms, provided specially for herself. She did in this case make provision for a preferred dividend, but did not on that account, or any other, relieve the property of the company from the burdens of taxation, such as were common to all property holders in the State. She did give the Baltimore and Ohio Company such an exemption, but that privilege was kept back from this corporation.

We are all clearly of the opinion that the power to tax the property of the company was never relinquished by the State, either in express terms or by any fair implication.

Judgment affirmed.

HALL v. WISCONSIN.

134-107
137-327

A contract between a State and a party, whereby he is to perform certain duties for a specific period at a stipulated compensation, is within the protection of the Constitution; and on his executing it he is entitled to that compensation, although before the expiration of the period the State repealed the statute pursuant to which the contract was made.

ERROR to the Supreme Court of the State of Wisconsin.

The facts are stated in the opinion of the court.

Mr. Luther S. Dixon for the plaintiff in error.

No counsel appeared for the defendant in error.

MR. JUSTICE SWAYNE delivered the opinion of the court.

This is a writ of error to the Supreme Court of Wisconsin. The case we are called on to consider is thus disclosed in the record: —

By an act of the legislature, entitled "An Act to provide for a geological, mineralogical, and agricultural survey of the State," approved March 3, 1857, James Hall, of the State of

New York, the plaintiff in error, and Ezra Carr and Edward Daniels, of Wisconsin, were appointed "commissioners" to make the survey. Their duties were specifically defined, and were all of a scientific character.

They were required to distribute the functions of their work by agreement among themselves, and to employ such assistants as a majority of them might deem necessary.

The governor was required "to make a written contract with each commissioner" for the performance of his allotted work, and "the compensation therefor, including the charge of each commissioner;" and it was declared that "such contract shall expressly provide that the compensation to such commissioners shall be at a certain rate per annum, to be agreed upon, and not exceeding the rate of two thousand dollars per annum, and that payment will be made only for such part of the year as such commissioner may actually be engaged in the discharge of his duty as such commissioner."

In case of a vacancy occurring in the commission, the governor was empowered to fill it, and he was authorized to "remove any member for incompetency or neglect of duty."

To carry out the provisions of the act, the sum of $6,000 per annum for six years was appropriated, "to be paid to the persons entitled to receive the same."

By an act of the legislature of April 2, 1860, Hall was made the principal of the commission, and was vested with the general supervision and control of the survey. He was required to contract with J. D. Whitney and with Charles Whittlesey for the completion within the year of their respective surveys. To carry into effect these provisions, the governor was authorized to draw such portion of the original appropriation, not drawn previous to the 29th of May, 1858, as might be necessary for that purpose; the residue to be otherwise used as directed.

By a subsequent act of March 21, 1862, both the acts before mentioned were repealed without qualification.

On the 29th of May, 1858, Hall entered into a contract with the governor, whereby it was stipulated on his part that he should perform the duties therein mentioned touching the survey, "this contract to continue till the third day of March,

1863, unless the said Hall should be removed for incompetency or neglect of duty, . . . or unless a vacancy shall occur in his office by his own act or default."

On the part of the State it was stipulated "that the said Hall shall receive for his compensation and expenses, including the expense of his department of said survey, at the rate of $2,000 per annum. . . . *Provided*, that for such time as said Hall or his assistants shall not be engaged in the prosecution of his duties, according to the terms of said act and of this contract, deduction shall be made, *pro rata*, from the sum of his annual compensation and expenses."

Hall brought this action upon the contract. The declaration avers that immediately after the execution of the contract he entered upon the performance of the duties thereby enjoined upon him, and continued in their faithful performance until the time specified in the contract for its expiration, to wit, the 3d of March, 1863; that he was not removed by the governor for incompetency or neglect, nor was any complaint ever made by the governor against him; that he never at any time, directly or indirectly, assented to the repeal of the acts of 1857 and 1860; and that thereafter he continued in the performance of his labors the same as before, and that for the year ending March 3, 1863, he devoted his whole time and skill, without cessation, to the work.

He avers further, that for his services performed prior to March 3, 1862, he was fully paid, but that for the year ending March 3, 1863, he had received nothing; that payment was demanded and refused on the 3d of December, 1863, and that the defendant is, therefore, justly indebted to him in the sum of $2,000, with interest from the date last mentioned.

He avers, finally, that on the 30th of January, 1875, he presented his claim to the legislature by a proper memorial, and that its allowance was refused.

The State demurred upon two grounds: —

1. That the complaint did not show facts sufficient to constitute a cause of action;

2. That it appeared upon the face of the complaint that the cause of action did not accrue within six years before the commencement of the action.

In support of the first objection, it was insisted that the employment of the plaintiff was an office, and that the legislature had therefore the right to abolish it at pleasure. For the plaintiff, it was maintained that there was a contract, and that the repealing act impaired its obligation in violation of the contract clause of the Constitution of the United States.

The court sustained the demurrer upon the first ground, and the plaintiff declining to amend, dismissed his petition. The opinion of the court is limited to the first point, and ours will be confined to that subject. The whole case resolves itself into the issue thus raised by the parties.

No question is made as to the suability of the State. The proceeding is authorized by a local statute. The question raised by the record is within our jurisdiction. In the exercise of that jurisdiction in such cases this court is unfettered by the authority of State adjudications. It acts independently, and is governed by its own views. *Township of Pine Grove* v. *Talcott*, 19 Wall. 666.

The question to be considered was before us in *United States* v. *Hartwell*, 6 id. 385. It was there said that "an office is a public station or employment conferred by the appointment of government. The term embraces the ideas of tenure, duration, emolument, and duties. . . . A government office is different from a government contract. The latter, from its nature, is necessarily limited in its duration and specific in its objects. The terms agreed upon define the rights and obligations of both parties, and neither may depart from them without the assent of the other."

In *United States* v. *Maurice* (2 Brock. 96), Mr. Chief Justice Marshall said: "Although an office is an employment, it does not follow that every employment is an office. A man may certainly be employed under a contract, express or implied, to perform a service without becoming an officer."

The case before us comes within the definition we have taken from *United States* v. *Hartwell*, *supra*.

The statute under which the governor acted was explicit, that he should "make a written contract with each of the commissioners aforesaid, expressly stipulating and setting forth the nature and extent of the services to be rendered by each,

and the compensation therefor," and that "such contract" should expressly provide that the compensation of each commissioner should be at a certain rate per annum, to be agreed upon, and not exceeding $2,000 per annum for the time such commissioner may be actually engaged.

The action of the governor conformed to this view. The instrument executed pursuant to the statute recites that it is an "agreement" between the governor as one party, and Hall, Carr, and Randall, the commissioners, as the other. They severally agreed to do what the statute contemplated, and he agreed to pay all that it permitted.

The names and seals of the parties were affixed to the agreement, and its execution was attested by two subscribing witnesses, as in other cases of contract.

Where an office is created, the law usually fixes the compensation, prescribes its duties, and requires that the appointee shall give a bond with sureties for the faithful performance of the service required. To do all this, if the employment were an office, by a contract with the officer and without his bond would, to say the least, be a singular anomaly.

The acts of 1857 and 1860 both speak of Hall as "of Albany, N. Y." He was not, therefore, a citizen or a resident of the State of Wisconsin.

It is well settled in Wisconsin that such a person cannot be a public officer of that State. *State, ex rel. Off*, v. *Smith*, 14 Wis. 497; *State, ex rel. Schuet*, v. *Murray*, 28 id. 96.

In *United States* v. *Hatch*, the Supreme Court of Wisconsin decided that the term "civil officers" as used in the organic law (act of Congress of April 20, 1836) embraces only those officers in whom a portion of the sovereignty is vested, or to whom the enforcement of municipal regulations or the control of the general interests of society is confided, and does not include such officers as canal commissioners. 1 Pinn. (Wis.) 182.

In *Butler* v. *The Regents of the University* (32 Wis. 124), the same court held, without dissent, that a professor in the State university, appointed for a stated term with a fixed salary, was not a public officer in such a sense as prevented his employment from creating a contract relation between himself and the regents.

It is hard to distinguish that case in principle from the one before us.

In a sound view of the subject it seems to us that the legal position of the plaintiff in error was not materially different from that of parties who, pursuant to law, enter into stipulations limited in point of time, with a State, for the erection, alteration, or repair of public buildings, or to supply the officers or employés who occupy them with fuel, light, stationery, and other things necessary for the public service. The same reasoning is applicable to the countless employés in the same way, under the national government.

It would be a novel and startling doctrine to all these classes of persons that the government might discard them at pleasure, because their respective employments were public offices, and hence without the protection of contract rights.

It is not to be supposed that the plaintiff in error would have turned his back upon like employment, actual or potential, elsewhere, and have stipulated as he did to serve the State of Wisconsin for the period named, if the idea had been present to his mind that the State had the reserved power to break the relation between them whenever it might choose to do so. Nor is there anything tending to show that those who acted in behalf of the State had any such view at that time. All the facts disclosed point to the opposite conclusion as to both parties.

Undoubtedly, as a general proposition, a State may abolish any public office created by a public law (*Newton* v. *Commissioners*, 100 U. S. 559), but even with respect to those offices the circumstances may be such as to create an exception. In *Trustees of Dartmouth College* v. *Woodward*, Mr. Justice Story said: "It is admitted that the State legislatures have power to enlarge, repeal, and limit the authorities of public officers in their official capacities, in all cases where the constitutions of the States respectively do not prohibit them; and this, among others, for the very reason that there is no express or implied contract that they shall always, during their continuance in office, exercise such authorities. . . . But when the legislature makes a contract with a public officer, as in case of a stipulated salary for his services during a limited period, this, during

the limited period, is just as much a contract, within the purview of the constitutional prohibition, as a like contract would be between two private citizens." 4 Wheat. 518, 694.

When a State descends from the plane of its sovereignty, and contracts with private persons, it is regarded *pro hac vice* as a private person itself, and is bound accordingly. *Davis* v. *Gray*, 16 Wall. 203.

The general government has no powers but such as are given to it expressly or by implication.

The States and their legislatures have all such as have not been surrendered, or prohibited to them. *Gilman* v. *Philadelphia*, 3 Wall. 713. And see also 2 Greenleaf's Cruise, 67.

That the laws under which the governor acted, if valid, gave him the power to do all he did, is not denied. We will not, therefore, dwell upon that point. The validity of those laws is too clear to admit of doubt. It would be a waste of time to discuss the subject.

We are of the opinion that the Supreme Court of the State erred in the judgment given. It will, therefore, be reversed, and the case remanded for further proceedings in conformity with this opinion.

So ordered.

DENNICK *v.* RAILROAD COMPANY.

103 11
L.ed 439
145 604

103 11
L.ed 439
146 670
491 437
501 824

103 11
L.ed 439
531 309

1. A right arising under or a liability imposed by either the common law or the statute of a State may, where the action is transitory, be asserted and enforced in any circuit court of the United States having jurisdiction of the subject-matter and the parties.
2. A. died in New Jersey from injuries there received, for which, if death had not ensued, B., the party inflicting them, would have been liable to an action for damages. The statute of that State (*infra*, p. 12) provides that such an action may be brought against the party by the personal representative of the deceased. C., appointed, under the laws of New York, administratrix of A., brought, in a court of the latter State, a suit against B., which, by reason of the citizenship of the parties, was removed to the Circuit Court of the United States. *Held*, 1. That the suit can be maintained, the right of action not being limited by the statute to a personal representative of the deceased appointed in New Jersey and amenable to her jurisdiction. 2. That distribution of moneys recovered by C. from B. may be enforced by the courts of New York in the manner prescribed by that statute.

ERROR to the Circuit Court of the United States for the Northern District of New York.

An act of the General Assembly of the State of New Jersey, approved March 3, 1848, provides as follows:—

"SECT. 1. That whenever the death of a person shall be caused by wrongful act, neglect, or default, and the act, neglect, or default is such as would, if death had not ensued, have entitled the party injured to maintain an action and recover damages in respect there of, then, and in every such case, the person who, or the corporation which, would have been liable, if death had not ensued, shall be liable to an action for damages, notwithstanding the death of the person injured and although the death shall have been caused under such circumstances as amount in law to felony.

"SECT. 2. That every such action shall be brought by and in the names of the personal representatives of such deceased person, and the amount recovered in every such action shall be for the exclusive benefit of the widow and next of kin of such deceased person, and shall be distributed to such widow and next of kin in the proportions provided by law in relation to the distribution of personal property left by persons dying intestate; and in every such action the jury may give such damages as they shall deem fair and just, with reference to the pecuniary injury resulting from such death, to the wife and next of kin of such deceased person."

The plaintiff brought suit in a State court of New York against The Central Railroad Company of New Jersey, to recover damages for the death of her husband by an accident on the defendant's road. The company entered an appearance and removed the case into the Circuit Court of the United States, on the ground that the plaintiff was a citizen of New York and the defendant a corporation of New Jersey. The complaint filed in the Circuit Court alleges that the plaintiff was his widow, and her children were his next of kin; that she was administratrix of his estate, appointed by the proper court in New York; and that his death was caused by the negligence of the defendant. Damages in the sum of $15,000 were claimed.

The answer denied the negligence, but admitted that the death was caused by the train running off the track in New Jersey, that there were a widow and next of kin, and that the

plaintiff had been appointed administratrix by the surrogate of Albany County, New York.

The parties waived a jury. The plaintiff introduced evidence tending to prove the negligence charged, whereupon the court ruled that for the death of her husband, which occurred in the State of New Jersey, she could not, under the special statute of that State, recover in the action. Judgment was rendered for the defendant. The plaintiff then sued out this writ of error.

Mr. Amasa J. Parker for the plaintiff in error.

The court below having acquired jurisdiction of the parties had full power to pass upon their relative rights and liabilities. The judicial power of every government looks beyond its municipal laws, and, in civil cases, between parties within its jurisdiction, lays hold of all subjects of litigation, though they are relative to the laws of the most distant part of the globe. The Federalist, No. 82. Rights which have accrued by the law of a foreign State are treated as valid everywhere; cognizance is therefore taken of extra-territorial facts, and of persons not generally subject to the jurisdiction. Westlake, Private Int. Law, p. 54, sect. 58.

In the jurisprudence of England, transitory actions at common law were entertained against, and at the suit of, any British subject or alien friend, wherever the cause of action really arose, if process might be served upon the defendant. Id. p. 105, sect. 120; 3 Stephen, Com. 451; 4 Phillimore, Int. Law, 648. Nor was there any distinction in this respect whether the cause of action was *ex contractu* or *ex delicto*. *Rafael* v. *Verelst*, 2 W. Bl. 983, 1055; *Scott* v. *Seymour*, 1 H. & C. 219; *Phillips* v. *Eyre*, Law Rep. 6 Q. B. 1; *Madrazo* v. *Willes*, 3 Barn. & Ald. 353; *Mostyn* v. *Fabrigas*, Cowp. 161; *De la Vega* v. *Viana*, 1 Barn. & Ad. 284; 1 Sm. L. C. 340.

The same principle has been recognized and applied without qualification in the courts of this country to cases arising on contracts: *Cox* v. *United States*, 6 Pet. 172; *Caldwell* v. *Carrington*, 9 id. 86; *Green* v. *Van Buskirk*, 7 Wall. 139; *King* v. *Sarria*, 69 N. Y. 24; *Barrell* v. *Benjamin*, 15 Mass. 354; *Roberts* v. *Knight*, 7 Allen (Mass.), 449; *Miller* v. *Black*, 2 Jones (N. C.) L. 341; *Ruse* v. *Mutual, &c. Insurance Co.*, 23 N. Y.

516; and to personal injuries or torts: *McKenna* v. *Fisk*, 1 How. 241; *McCormick* v. *Pennsylvania Railroad Co.*, 49 N. Y. 303; *Boynton* v. *Boynton*, 43 How. Ap. Cas. 383; *Johnson* v. *Dalton*, 1 Cow. (N. Y.) 543; *Smith* v. *Bull*, 17 Wend. (N. Y.) 323; *Stout* v. *Wood*, 1 Blackf. (Ind.) 71; *Lister* v. *Wright*, 2 Hill (N. Y.), 320; *Gardner* v. *Thomas*, 14 Johns. (N. Y.) 134; *Glen* v. *Hodges*, 9 id. 68; *Smith* v. *Butler*, 1 Daly (N. Y.), 508; *McIvor* v. *McCabe*, 26 How. Ap. Cas. 257; *Hull* v. *Vreeland*, 42 Barb. (N. Y.) 543; *Latourette* v. *Clark*, 45 id. 327; *De Witt* v. *Buchanan*, 54 id. 31; *Newman* v. *Goddard*, 3 Hun (N. Y.), 70; *Watts* v. *Thomas*, 2 Bibb (Ky.), 458; *Wall* v. *Hoskins*, 5 Ired. (N. C.) L. 177; *Shiff* v. *McCrow*, 3 Murphy (N. C.), 463; *Walters* v. *Breeder*, 3 Jones (N. C.) L. 64; *Northern Central Railroad Co.* v. *Scholl's Ex.*, 16 Md. 332; *Great Western Railway Co.* v. *Miller*, 19 Mich. 305; *Ackerson* v. *Erie Railroad Co.*, 31 N. J. L. 309.

As the rule is founded on the principle of comity, the foreign law, if not contrary to the public policy of the country where the suit is brought, nor to abstract justice or pure morals, will be recognized and enforced. *King* v. *Sarria*, 69 N. Y. 24; *Phillips* v. *Eyre*, Law Rep. 6 Q. B. 1; *Wall* v. *Hoskins*, *supra*.

It is no objection that all the parties to the suit are aliens or non-residents, and that the cause of action arose abroad. *Rafael* v. *Verelst*, *supra*; *Johnson* v. *Dalton*, 1 Cow. (N. Y.) 543; *Mason* v. *Ship Blaireau*, 2 Cranch, 240; *Barrell* v. *Benjamin*, 15 Mass. 354; *Roberts* v. *Knights*, 7 Allen (Mass.), 449; *Watts* v. *Thomas*, 2 Bibb (Ky.), 458; *De Witt* v. *Buchanan*, 54 Barb. (N. Y.) 31; *Newman* v. *Goodard*, 3 Hun (N. Y.), 70; *Latourette* v. *Clark*, 45 Barb. (N. Y.) 327; *Smith* v. *Spinola*, 2 Johns. (N. Y.) 198; *Gardner* v. *Thomas*, 14 id. 134; *Smith* v. *Butler*, 1 Daly (N. Y.), 508; *Melan* v. *Fitzjames*, 1 Bos. & Pul. 138; *Miller* v. *Black*, 2 Jones (N. C.) L. 341; *McCormick* v. *Pennsylvania Railroad Co.*, 49 N. Y. 303; *De la Vega* v. *Viana*, 1 Barn. & Ad. 284; *Walters* v. *Breeder*, 3 Jones (N. C.) L. 64; *Ruse* v. *Mutual, &c. Insurance Co.*, 23 N. Y. 516; *Ackerson* v. *Erie Railroad Co.*, 31 N. J. L. 309.

If, however, in this respect, the rule as between subjects or citizens of different nations were otherwise, it would not affect

the right of a citizen of one State to sue in the courts of another, as under the Federal Constitution he is entitled to all privileges and immunities of citizens in the several States, including the right of resorting to the same legal remedies. *Barrell* v. *Benjamin*, 15 Mass. 354; *McIvor* v. *McCabe*, *supra*; *Miller* v. *Black*, *supra*; *Bank of Augusta* v. *Earle*, 13 Pet. 520.

The rule has been specially applied to foreign corporations; and actions have been sustained in the courts of one State for injuries to persons and property, caused by negligence in operating railways in other States. *Bissell* v. *Michigan Railroad Co.*, 22 N. Y. 258; *McCormick* v. *Pennsylvania Railroad Co.*, *supra*; *Howe Insurance Co.* v. *Pennsylvania Railroad Co.*, 11 Hun (N. Y.), 182.

There is no reason in morals, justice, or policy why the same rule should not be applied to all transitory actions for injuries to persons and property, whether recognized by the common law, or created by statute to meet new exigencies of modern life. The claim of comity, on which the rule is founded, is as urgent and unanswerable in the one case as in the other. *Stallknecht* v. *Pennsylvania Railroad Co.*, 13 Hun (N. Y.), 451; *Ex parte Van Riper*, 20 Wend. (N. Y.) 614; *Lowry* v. *Inman*, 46 N. Y. 119.

A personal liability created by the statute of another State will, as other personal obligations, be enforced according to the course of procedure in the place where the defendant is found. *Lowry* v. *Inman*, *supra*; *Pickering* v. *Fisk*, 6 Vt. 102; *Railroad* v. *Sprayberry*, 8 Bax. (Tenn.) 341; *McDonald* v. *Mallory*, 77 N. Y. 547; *Whitford* v. *Panama Railroad Co.*, 23 id. 465; *Vandeventer* v. *New York & New Haven Railroad Co.*, 27 Barb. (N. Y.) 244; *Great Western Railway Co.* v. *Miller*, 19 Mich. 305; *Selma, &c. Railroad Co.* v. *Lacy*, 43 Ga. 461.

Mr. Henry G. De Forest for the defendant in error.

The statute in question has no extra-territorial force, and it gives a cause of action only to a personal representative appointed in New Jersey when the death occurred in that State. *Mackay, Admx.*, v. *Central Railroad Co. of New Jersey*, 14 Blatchf. 65; *Whitford* v. *Panama Railroad Co.*, 23 N. Y. 465; *Beach* v. *Bay State Co.*, 30 Barb. (N. Y.) 433.

The alleged injury in this case was received in New Jersey,

and the intestate died there. The question therefore arises whether the damages which her statute authorizes his personal representative to sue for and obtain for the benefit of his widow and next of kin can be recovered by an administrator appointed under the laws of New York.

An administrator takes his title by force of the grant of administration. *Marcy* v. *Marcy*, 32 Conn. 308. The laws of the State in which he is appointed prescribe his rights, powers, and duties. Another State cannot impose upon him different liabilities or obligations. He is the creature of the local law, and, until additional authority is derived by virtue of an appointment in another jurisdiction, he has only the power which that law confers.

The plaintiff sets up, not a right to her property, or to that which belonged to the deceased, but a right to sue as the trustee of a fund which may be obtained for his widow and next of kin, a position which she, by the law under which she was appointed, does not sustain. In order to execute such a trust, the trusteeship must attach to her appointment as administratrix under the laws of New York, and they do not confer upon her the right to damages for injuries received by him in another State, and resulting in his death. *Richardson* v. *New York Central Railroad Co.*, 98 Mass. 85; *Woodward* v. *Michigan Southern, &c. Railroad Co.*, 10 Ohio St. 121; *Armstrong* v. *Bendle*, 5 Sawyer, 485; *McCarthy* v. *Chicago, Rock Island, & Pacific Railroad Co.*, 18 Kan. 46; *Maryland* v. *Pittsburg & Connellsville Railroad Co.*, 45 Md. 41; *Needham, Admx.*, v. *Grand Trunk Railroad*, 38 Vt. 294; *Illinois Central Railroad* v. *Cragin, Admr.*, 71 Ill. 177.

The reasoning in the cases cited may be briefly summarized as follows: —

First, The plaintiff's right as administratrix to recover for the "pecuniary injury resulting from death to the widow and next of kin" is unknown at common law, and can exist only by statute.

Second, The statute of New Jersey, under which she sues, has no extra-territorial force. It gives a cause of action for this "pecuniary injury" only when the death occurs within the State of New Jersey.

Third, In like manner, the statute of New Jersey has no extra-territorial force to confer upon a creature of the New York law powers and duties other than those bestowed by the laws of New York.

MR. JUSTICE MILLER, after stating the case, delivered the opinion of the court.

It is understood that the decision of the court below rested solely upon the proposition that the liability in a civil action for damages which, under the statute of New Jersey, is imposed upon a party, by whose wrongful act, neglect, or default death ensues, can be enforced by no one but an administrator, or other personal representative of the deceased, appointed by the authority of that State. And the soundness or unsoundness of this proposition is what we are called upon to decide.

It must be taken as established by the record that the accident by which the plaintiff's husband came to his death occurred in New Jersey, under circumstances which brought the defendant within the provisions of the first section of the act making the company liable for damages, notwithstanding the death.

It can scarcely be contended that the act belongs to the class of criminal laws which can only be enforced by the courts of the State where the offence was committed, for it is, though a statutory remedy, a civil action to recover damages for a civil injury.

It is indeed a right dependent solely on the statute of the State; but when the act is done for which the law says the person shall be liable, and the action by which the remedy is to be enforced is a personal and not a real action, and is of that character which the law recognizes as transitory and not local, we cannot see why the defendant may not be held liable in any court to whose jurisdiction he can be subjected by personal process or by voluntary appearance, as was the case here.

It is difficult to understand how the nature of the remedy, or the jurisdiction of the courts to enforce it, is in any manner dependent on the question whether it is a statutory right or a common-law right.

Wherever, by either the common law or the statute law of a State, a right of action has become fixed and a legal liability incurred, that liability may be enforced and the right of action pursued in any court which has jurisdiction of such matters and can obtain jurisdiction of the parties.

The action in the present case is in the nature of trespass to the person, always held to be transitory, and the venue immaterial. The local court in New York and the Circuit Court of the United States for the Northern District were competent to try such a case when the parties were properly before it. *Mostyn* v. *Fabrigas*, 1 Cowp. 161; *Rafael* v. *Verelst*, 2 W. Bl. 983, 1055; *McKenna* v. *Fisk*, 1 How. 241. We do not see how the fact that it was a statutory right can vary the principle. A party legally liable in New Jersey cannot escape that liability by going to New York. If the liability to pay money was fixed by the law of the State where the transaction occurred, is it to be said it can be enforced nowhere else because it depended upon statute law and not upon common law? It would be a very dangerous doctrine to establish, that in all cases where the several States have substituted the statute for the common law, the liability can be enforced in no other State but that where the statute was enacted and the transaction occurred. The common law never prevailed in Louisiana, and the rights and remedies of her citizens depend upon her civil code. Can these rights be enforced or the wrongs of her citizens be redressed in no other State of the Union? The contrary has been held in many cases. See *Ex parte Van Riper*, 20 Wend. (N. Y.) 614; *Lowry* v. *Inman*, 46 N. Y. 119; *Pickering* v. *Fisk*, 6 Vt. 102; *Railroad* v. *Sprayberry*, 8 Bax. (Tenn.) 341; *Great Western Railway Co.* v. *Miller*, 19 Mich. 305.

But it is said that, conceding that the statute of the State of New Jersey established the liability of the defendant and gave a remedy, the right of action is limited to a personal representative appointed in that State and amenable to its jurisdiction.

The statute does not say this in terms. "Every such action shall be brought by and in the names of the personal representatives of such deceased person." It may be admitted that

for the purpose of this case the words "personal representatives" mean the administrator.

The plaintiff is, then, the only personal representative of the deceased in existence, and the construction thus given the statute is, that such a suit shall *not* be brought by her. This is in direct contradiction of the words of the statute. The advocates of this view interpolate into the statute what is not there, by holding that the personal representative must be one residing in the State or appointed by its authority. The statute says the amount recovered shall be for the exclusive benefit of the widow and next of kin. Why not add here, also, by construction, "if they reside in the State of New Jersey"?

It is obvious that nothing in the language of the statute requires such a construction. Indeed, by inference, it is opposed to it. The first section makes the liability of the corporation or person absolute where the death arises from their negligence. Who shall say that it depends on the appointment of an administrator within the State?

The second section relates to the remedy, and declares who shall receive the damages when recovered. These are the widow and next of kin. Thus far the statute declares under what circumstances a defendant shall be liable for damages, and to whom they shall be paid. In this there is no ambiguity. But fearing that there might be a question as to the proper person to sue, the act removes any doubt by designating the personal representative. The plaintiff here is that representative. Why can she not sustain the action? Let it be remembered that this is not a case of an administrator, appointed in one State, suing in that character in the courts of another State, without any authority from the latter. It is the general rule that this cannot be done.

The suit here was brought by the administratrix in a court of the State which had appointed her, and of course no such objection could be made.

If, then, the defendant was liable to be sued in the courts of the State of New York on this cause of action, and the suit could only be brought by such personal representative of the deceased, and if the plaintiff is the personal representative,

whom the courts of that State are bound to recognize, on what principle can her right to maintain the action be denied?

So far as any reason has been given for such a proposition, it seems to be this: that the foreign administrator is not responsible to the courts of New Jersey, and cannot be compelled to distribute the amount received in accordance with the New Jersey statute.

But the courts of New York are as capable of enforcing the rights of the widow and next of kin as the courts of New Jersey. And as the court which renders the judgment for damages in favor of the administratrix can only do so by virtue of the New Jersey statute, so any court having control of her can compel distribution of the amount received in the manner prescribed by that statute.

Again: it is said that, by virtue of her appointment in New York, the administratrix can only act upon or administer that which was of the estate of the deceased in his lifetime. There can be no doubt that much that comes to the hands of administrators or executors must go directly to heirs or devisees, and is not subject to sale or distribution in any other mode, such as specific property devised to individuals, or the amount which by the legislation of most of the States is set apart to the family of the deceased, all of which can be enforced in the courts; and no reason is perceived why the specific direction of the law on this subject may not invest the administrator with the right to receive or recover by suit, and impose on him the duty of distributing under that law. There can be no doubt that an administrator, clothed with the apparent right to receive or recover by suit property or money, may be compelled to deliver or pay it over to some one who establishes a better right thereto, or that what he so recovers is held in trust for some one not claiming under him or under the will. And so here. The statute of New Jersey says the personal representative shall recover, and the recovery shall be for the benefit of the widow and next of kin. It would be a reproach to the laws of New York to say that when the money recovered in such an action as this came to the hands of the administratrix, her courts could not compel distribution as the law directs.

It is to be said, however, that a statute of New York, just

like the New Jersey law, provides for bringing the action by the personal representative, and for distribution to the same parties, and that an administrator appointed under the law of that State would be held to have recovered to the same uses, and subject to the remedies in his fiduciary character which both statutes prescribe.

We are aware that *Woodward* v. *Michigan Southern & Northern Indiana Railroad Co.* (10 Ohio St. 121) asserts a different doctrine, and that it has been followed by *Richardson* v. *New York Central Railroad Co.*, 98 Mass. 85, and *McCarthy* v. *Chicago, Rock Island, & Pacific Railroad Co.*, 18 Kan. 46. The reasons which support that view we have endeavored to show are not sound. These cases are opposed by the latest decision on the subject in the Court of Appeals of New York, in the case of *Leonard, Administrator*, v. *The Columbia Steam Navigation Co.*, not yet reported, but of which we have been furnished with a certified copy.

The right to recover for an injury to the person, resulting in death, is of very recent origin, and depends wholly upon statutes of the different States. The questions growing out of these statutes are new, and many of them unsettled. Each State court will construe its own statute on the subject, and differences are to be expected. In the absence of any controlling authority or general concurrence of decision, this court must decide for itself the question now for the first time presented to it, and with every respect for the courts which have held otherwise, we think that sound principle clearly authorizes the administrator in cases like this to maintain the action.

Judgment reversed, with directions to award a new trial.

PREWIT v. WILSON.

1. A conveyance executed for a valuable and adequate consideration will be upheld against the creditors of the grantor, however fraudulent his purpose may have been, if the grantee had no knowledge thereof.
2. An ante-nuptial settlement of lands, though made by the settler with the design of defrauding his creditors, will not be set aside in the absence of the clearest proof of his intended wife's participation in the fraud.

APPEAL from the Circuit Court of the United States for the Northern District of Alabama.

The facts are stated in the opinion of the court.

Mr. John T. Morgan for the appellants.

Mr. F. P. Ward, contra.

MR. JUSTICE FIELD delivered the opinion of the court.

On the 27th of April, 1866, Mrs. Josephine Prewit was a widow, only twenty years of age. Her husband was the late John Prewit. Not many months after his death another Mr. Prewit—Richard, this time—proposed marriage to her. He was of mature age, being in his fifty-eighth year. His proposal was rejected. He renewed it, and accompanied it with a promise to settle upon her, if she would consent to the marriage, a large amount of property. This promise moved her to consent. The deed of settlement was accordingly executed, and in May following the marriage took place. Both parties affirm that the marriage was the only consideration for the settlement, and it is so stated in the deed.

A little more than two years and a half afterwards,—in December, 1868,—the husband was adjudged to be a bankrupt in the District Court of the United States for the Northern District of Alabama, in proceedings taken upon his own application; and in the following month the plaintiff was appointed assignee of his effects, and to him an assignment was made. The present suit is brought by him to set aside the deed of settlement, on the alleged ground that it was executed by Prewit to defraud his creditors.

At the time of the settlement Prewit was the holder of a

large amount of property, consisting chiefly of lands in Alabama, but was indebted in an amount greater than their value. It is stated that his property was not worth more than $50,000, and that his debts exceeded $70,000.

It would seem from the evidence, and we assume it to be a fact, that he was insolvent at the time he executed the deed of settlement, in the sense that his debts largely exceeded the value of his property. It may also be taken as true, so far as the present suit is concerned, that he intended by the deed to hinder, delay, and defraud his creditors, and that he made the settlement to place his property beyond their reach.

There is no evidence that Mrs. Prewit was aware at the time of the amount of property he held, or of the extent of his debts, or that he had any purpose in the execution of the deed except to induce her to consent to the marriage. It is not at all likely, judging from the ordinary motives governing men, that whilst pressing his suit with her, and offering to settle property upon her to obtain her consent to the marriage, he informed her that he was insolvent, and would, by the deed he proposed to execute, defraud his creditors. If he intended to commit the fraud imputed to him, it is unreasonable to suppose that he would, by unfolding his scheme, expose his true character to one whose good opinion he was at that time anxious to secure. If capable of the fraud charged, he was capable of deceiving Mrs. Prewit as to his pecuniary condition. She states in her answer that she knew he was embarrassed and in debt, but to what extent or to whom she did not know, and that it was because of the knowledge that he was embarrassed that she insisted upon his making a settlement upon her. The deed itself shows that he owed a large sum, for of the 6,770 acres of land embraced by it, 2,185 acres were charged with the payment of certain designated debts to the amount of $18,000. A knowledge of these facts justified her in saying that she knew he was embarrassed; but they rather dispelled than created any suspicion that he had a design to defraud his creditors. Her statements do not warrant the inference of knowledge of any such purpose, much less of any assent to its execution. Besides the property charged in the deed with the payment of the large amount of indebtedness mentioned, he owned

4,700 acres of land not included in it, and personal property of the value of several hundred dollars.

When a deed is executed for a valuable and adequate consideration, without knowledge by the grantee of any fraudulent intent of the grantor, it will be upheld, however fraudulent his purpose. To vitiate the transfer in such case, the grantee also must be chargeable with knowledge of the intention of the grantor.

Now, marriage is not only a valuable consideration, but, as Coke says, there is no other consideration so much respected in the law. Bishop justly observes, that "Marriage is attended and followed by pecuniary consequences; by happiness or misery to the parties; by life to unborn children; by unquiet or repose to the State; by what money ordinarily buys and by what no money can buy, to an extent which cannot be estimated or expressed, except by the word 'infinite.' To say, therefore, that it is to be regarded, where it is the inducement to any contract, as a valuable consideration, is to utter truth, yet only a part of the truth." And, also, that "Marriage is to be ranked among the valuable considerations, yet it is distinguishable from most of these in not being reducible to a value which can be expressed in dollars and cents, while still it is in general terms of the very highest value." Law of Married Women, sects. 775, 776. Such is the purport and language running through all the decisions, both in England and in this country, with reference to marriage as a consideration for an ante-nuptial settlement. *Barrow* v. *Barrow*, 2 Dick. 504; *Nairn* v. *Prowse*, 6 Ves. Jr. 752; *Campion* v. *Cotton*, 17 id. 264; *Sterry* v. *Arden*, 1 Johns. (N. Y.) Ch. 261; *Herring* v. *Wickham*, 29 Gratt. (Va.) 628.

In *Magniac* v. *Thompson* this court said that "Nothing can be clearer, both upon principle and authority, than the doctrine that to make an ante-nuptial settlement void, as a fraud upon creditors, it is necessary that both parties should concur in or have cognizance of the intended fraud. If the settler alone intend a fraud and the other party have no notice of it, but is innocent of it, she is not and cannot be affected by it. Marriage, in contemplation of the law, is not only a valuable consideration to support such a settlement, but is

a consideration of the highest value, and from motives of the soundest policy is upheld with a steady resolution." 7 Pet. 348, 393.

The same doctrine is asserted by the Supreme Court of Alabama, in which State the parties to the deed of settlement reside and in which it was executed. *Andrews* v. *Jones*, 10 Ala. 400.

According to these authorities there can be no question of the validity of the settlement in this case. There is an entire absence of elements which would vitiate even an ordinary transaction of sale where, if set aside, the parties may be placed in their former positions. And an ante-nuptial settlement, though made with a fraudulent design by the settler, should not be annulled without the clearest proof of the wife's participation in the intended fraud, for upon its annulment there can follow no dissolution of the marriage, which was the consideration of the settlement.

It follows that the decree of the court below must be reversed, and the cause remanded with directions to dismiss the bill of complaint; and it is

So ordered.

INSURANCE COMPANY v. STINSON.

1. The owner of the equity of redemption has an insurable interest equal to the value of the buildings on the land.
2. A party having a mechanic's lien on buildings by him erected on land then covered by mortgage has an insurable interest, limited only by their value and the amount of his claim. His discontinuance of his suit to enforce the lien after their destruction is not matter of defence to his action on the policy.

ERROR to the Circuit Court of the United States for the District of Massachusetts.

The facts are stated in the opinion of the court.

Mr. Charles T. Russell and *Mr. Charles T. Russell, Jr.*, for the plaintiff in error.

Mr. Robert D. Smith, contra.

MR. JUSTICE BRADLEY delivered the opinion of the court.

This was an action on a policy of insurance against loss or damage by fire. Stinson, the plaintiff below, had a contract to build a hotel to be called the Webster House, at Marshfield, Plymouth County, Massachusetts, for the sum of $25,000, and had nearly completed it; but, failing to get his payments from the owner, he stopped work and took the necessary steps for securing a mechanic's lien on the building. For this purpose he filed the required statement with the town clerk, and commenced an action to enforce his lien within the period prescribed by law. Whilst that action was pending, in July, 1875, he procured the policy in question from the plaintiffs in error, the defendants below, insuring him for three months against loss or damage by fire to the amount of $5,000 on the building, — the policy stating his interest to be that of contractor and builder. The loss occurred during the continuance of the policy, and due notice was given. After the fire the plaintiff did not further prosecute his action to enforce the lien; but commenced the present action for the amount of his insurance. When the building contract was entered into, and until the loss occurred, the property on which the building was erected was subject to a mortgage for a debt of $17,000, being the purchase-money which the owner had agreed to pay to the former owner; and which is conceded to have been a lien on the whole property prior to that of the plaintiff. Two defences were made by the insurance company to the action: first, the failure of the plaintiff to prosecute his suit for enforcing his lien; secondly, want of insurable interest, from the alleged fact that the property, at the time of the loss, was not worth more than the amount of the prior mortgage. The court overruled these defences, and charged the jury substantially as follows, namely: that if the plaintiff had a valid builder's lien when the policy was effected, which could have been enforced by the decree of the appropriate court against the equity of redemption of the property, and if it was a valid and subsisting lien at the time of the loss, it was immaterial whether he did or did not subsequently perform those acts, the non-performance of which as conditions subsequent might have dissolved the lien.

The court further instructed the jury in substance that if the plaintiff had such builder's lien when the policy was effected, which could have been enforced by the decree of the appropriate court, and by virtue of which he could have recovered the equity of redemption on that property, then he was entitled to recover, without regard to the question what his equity of redemption might or might not have realized at an auction sale; that if a party has a valid and subsisting second security for a given amount, and he enters into a contract of indemnity against the destruction of that security, and a loss by fire occurs, both parties having full knowledge of the state of the property and the title when the contract is entered into, such insurance would cover that second security, although by the subsequent course of events the older and prior security might have swept away the value of the second; and that if the jury found in this case that this plaintiff had a valid claim for a given amount subsisting at the time of the loss, and which he had done everything that was required of him to enforce up to the time of the loss, and that it was such a claim, for instance, as he could have recovered a judgment for $5,000 or $6,000 or $8,000, and a judgment against that equity of redemption on that property, that was, for the purposes of this trial, an insurable interest, and an interest which he had on that property, whether by any course of events that property might have been by subsequent events more or less affected; and for the purposes of this trial the court instructed the jury to so consider it.

To this charge, and to the refusal to give instructions to the contrary, the defendants took a bill of exceptions.

We think that the instructions were correct. As to the first point, based on the abandonment by the plaintiff, after the destruction of the building, of the proceedings to enforce his lien, it is apparent from the evidence adduced by the defendants themselves that it could not have injured them. But, aside from this consideration, if the plaintiff had an insurable interest at the time of issuing the policy and at the time of the loss, equal to the amount insured, he had a complete and absolute cause of action against the defendants; and it was no concern of theirs whether he farther prosecuted his lien or not,

unless they desired to be subrogated to his rights, and gave him notice to that effect. Whether, if they had done this, and had offered to indemnify him against all costs and expenses, a refusal on his part to continue the proceedings would have been a defence to this action, it is unnecessary to inquire. No such course was taken by the defendants. We may remark, however, that where a creditor effects insurance on property mortgaged or pledged to him as security for the payment of his debt, the insurers do not become sureties of the debt, nor do they acquire all the rights of such sureties. They are insurers of the particular property only, and so long as that property is liable for the debt, so long its destruction by fire would be a loss to the creditor within the terms of the policy. A surety of the debt might complain if the creditor should surrender to the debtor collateral securities; but an insurer of property for the benefit of the mortgagee would have no just ground of complaint. True, after a loss has occurred and the insurance has been paid, sufficient to discharge the debt, the insurers may be entitled to be subrogated to the rights of the creditor against the debtor, and to any collateral securities which the creditor may then hold and which are primarily liable for the debt before the insurers. But even then we do not think that the creditor is bound to take any active steps to realize the fruits of a collateral, or to keep it from expiring, unless the insurance be first paid and notice be given to him of a desire on the part of the insurers to be subrogated to his rights, with a tender of indemnity against expenses. We are aware that views somewhat differing from these have been held by respectable authority; but we think without any sound reason. See May on Insurance, sect. 457; *Insurance Company* v. *Woodruff*, 2 Dutch. (N. J.) 541. To impose such restrictions and obligations upon the creditor would be to add to the contract of insurance conditions never contemplated by the parties, making of it a mere shadow of security, and increasing the avenues of escape from obligation to pay, already too numerous and oppressive. When a building is insured in the interest of a mortgagee, the insurance company does not inquire what other collaterals he holds, and never reduces its premium on any such consideration.

As to the other question, relating to the insurable interest of

the plaintiff, we think that the charge given was equally free from exception. There is no doubt that the owner of the property had an insurable interest to the extent of the value of the building notwithstanding the existence of a mortgage on the property of sufficient amount to absorb it. Leading authorities on the point may be found cited in May on Insurance, sects. 81, 82. The remarks of Mr. Chief Justice Marshall, in delivering the opinion of the court in *Columbian Insurance Co.* v. *Lawrence* (2 Pet. 25), are apposite and illustrative. The assured in that case, though in possession, had only a contract for a purchase of the property, subject to a condition which had not been complied with, but of which the vendor had taken no advantage at the time of effecting the insurance, or at the time of the loss. The Chief Justice says: "That an equitable interest may be insured is admitted. We can perceive no reason which excludes an interest held under an executory contract. While the contract subsists, the person claiming under it has undoubtedly a substantial interest in the property. If it be destroyed, the loss in contemplation of law is his. If the purchase-money be paid, it is his in fact. If he owes the purchase-money, the property is its equivalent, and is still valuable to him. The embarrassment of his affairs may be such that his debts may absorb all his property; but this circumstance has never been considered as proving a want of interest in it. The destruction of the property is a real loss to the person in possession, who claims title under an executory contract, and the contingency that his title may be defeated by subsequent events does not prevent this loss."

The principle asserted in these remarks, as well as the reason of the thing, leads to the conclusion, that the owner of an equity of redemption has an insurable interest equal to the value of the insurable property embraced therein, whether he is personally liable for the mortgage debt or not. His interest arises from his ownership, carrying with it the incidental right of redeeming the property from the incumbrances on it. If he is also personally liable for such incumbrances, it only makes his interest more direct and exacting.

Such being the insurable interest of the owner of the equity of redemption, it follows that one who has a mechanic's lien

on the property by virtue of a contract with such owner, has an equal insurable interest, limited only by the value of the property and the amount of his claim. In the present case it is admitted that the value of the building insured exceeded the amount of the plaintiff's claim; and that the latter was equal to the amount insured. The insurable interest of the lienholder arises from the nature of the lien, which is a *jus ad rem*. All the owner's rights in the property are potentially his. They are under hypothecation to him for his security, and he can reduce them to possession if the debt be not paid. He is, therefore, directly interested in the property to the extent of his demand, whatever other security he may hold; and is entitled to insure to that extent; and, if a loss occurs, to recover the full amount of his insurance, or so much thereof as may be necessary to satisfy his debt.

We think that there is no error in the record.

Judgment affirmed.

FOLGER v. UNITED STATES.

An assistant treasurer of the United States to whom, without prepayment therefor, the Commissioner of Internal Revenue furnishes for sale and distribution sealed packages of adhesive stamps, is not entitled to commissions or extra compensation for selling them.

APPEAL from the Court of Claims.

The facts are stated in the opinion of the court.

Mr. Walter H. Coleman and *Mr. George F. Comstock* for the appellant.

The Solicitor-General, contra.

MR. JUSTICE HARLAN delivered the opinion of the court.

In the month of June, 1866, some correspondence passed between Van Dyck, then assistant treasurer of the United States at the city of New York, and the Commissioner of Internal Revenue, as to whether the former should be required, in addition to his ordinary duties, to assist in the distribution of adhesive

stamps among those desiring to purchase them for their own use. An official communication from the Secretary of the Treasury to the assistant treasurer, under date of July 2, 1866, shows upon its face that the latter officer objected to being required to perform any such services. In that communication the Secretary says: —

"The Commissioner of Internal Revenue has referred to me your recent letter to him in relation to the distribution of revenue stamps in the city of New York. I am aware that the cares and responsibilities of your position are burdensome, and I should not think of increasing them were it not for the seeming necessity of so doing. The adhesive revenue stamps are all printed in Philadelphia, and it is deemed imprudent to multiply the places of their production. It is indispensable, however, that every facility shall be given by the government for their purchase and distribution. The consumption of stamps in New York alone is very large, while the amount which is naturally distributed from that city is no small part of the supply for the whole country. It seems to me very advisable, therefore, because of their great value, that they should be kept, as other property of the government is kept, in the possession of the government itself until actual sale. I am aware that the distribution will require a room set apart, perhaps, exclusively for that purpose, and some additional clerical force; but reasonable prudence and a proper regard for the public convenience, as I have suggested, constrain me to ask your critical consideration of the subject. It may not be improper for me to add that the assistant treasurer at San Francisco is employed in the distribution of stamps, and that I am disposed to ask the same service of the several other assistant treasurers in different parts of the country."

In a subsequent communication, dated Sept. 11, 1866, the Secretary said: —

"It has been deemed proper, as an additional means of facilitating the distribution of internal revenue stamps, that packages containing such denominations of stamps as are in most general demand should be placed in the hands of the assistant treasurers of the United States and some of the designated depositaries. Printed circulars will be furnished to you, specifying the contents and the cash value of each package, and the packages are to be sold, with seals unbroken, at such value, which will be stated upon each package. The amounts received from the sale of these packages should

be transmitted to the Commissioner of Internal Revenue, in the form of certificates of deposit, daily or weekly, as may be most convenient."

At a later period Charles J. Folger became assistant treasurer of the United States at the city of New York. Between Nov. 16, 1869, and the twenty-second day of July, 1870, inclusive, in obedience to the instructions and requirements contained in the foregoing communications, and without any application upon his part, he was furnished by the Commissioner of Internal Revenue with sealed packages of adhesive stamps for sale and distribution. He was not required to give, and did not give, any bond with reference to them. Upon each package, as it came to him, was marked as well the aggregate face value of the stamps contained in it for delivery to purchasers, as the amount of them of like kind, to be paid out to purchasers, as their commissions under the regulations established by the Commissioner. He was directed to sell and deliver the packages without disturbing their seals.

The commissions, at the time allowed by such regulations, to purchasers of *common* stamps were: two per cent in purchases of $50 or more, three per cent on $100 or more, four per cent on $500 or more, and five per cent on $1,000 or more; while as to *proprietary* stamps, the commissions allowed, by statute, were as hereinafter stated.

His sales of common stamps from Nov. 16, 1869, to July 22, 1870, inclusive, amounted to $3,642,754.60, and of proprietary stamps, to $31,589.54. These sums, respectively, included the amount, in stamps, which he passed over to purchasers as their commissions. Upon retirement from office his accounts were settled and adjusted at the Treasury Department, without any assertion of a right to commissions for himself. In that settlement he was allowed, or credited with, all payments made by him, in stamps, of commissions to purchasers. He derived no personal advantage from the sales.

He brought this action on the first day of May, 1875, to recover from the United States the sum of $184,934.95, to which he claims to be entitled as commissions upon such sales. His claim was denied, and judgment having been entered for the government, he appealed.

By sect. 161 of the act of June 30, 1864, c. 173, providing internal revenue to support the government, to pay the interest on the public debt, and for other purposes, it is provided, among other things, that —

"The Commissioner of Internal Revenue be, and he is hereby, authorized to sell to and supply collectors, deputy collectors, postmasters, stationers, or any other persons, at his discretion, with adhesive stamps, or stamped paper, vellum, or parchment, as herein provided for, in amounts of not less than fifty dollars, upon the payment, at the time of delivery, of the amount of duties said stamps, stamped paper, vellum, or parchment, so sold or supplied, represent, and may allow, upon the aggregate amount of such stamps, as aforesaid, the sum of not exceeding five per centum as commission to the collectors, postmasters, stationers, or other purchasers; but the cost of any paper, vellum, or parchment shall be paid by the purchaser of such stamped paper, vellum, or parchment as aforesaid: *Provided*, that any proprietor or proprietors of articles named in Schedule C, who shall furnish his or their own die or design for stamps, to be used especially for his or their own pro prietary articles, shall be allowed the following commission, namely: on amounts purchased at one time, of not less than fifty dollars nor more than five hundred dollars, five per centum; on amounts over five hundred dollars, ten per centum." 13 Stat. 294.

Sect. 170 of the same act declares, —

"That in any collection district where in the judgment of the Commissioner the facilities for the procurement and distribution of stamped vellum, parchment, or paper, and adhesive stamps, are or shall be insufficient, the Commissioner is authorized to furnish, supply, and deliver to the collector and to the assessor of any such district and to any assistant treasurer of the United States, or designated depositary thereof, or any postmaster, a suitable amount of stamped vellum, parchment, or paper, and adhesive stamps, without prepayment therefor, and shall allow the highest rate of commissions allowed by law to any other parties purchasing the same; and may in advance require of any such collector, assessor, assistant treasurer of the United States, or postmaster, a bond with sufficient sureties to an amount equal to the value of any stamped vellum, parchment, or paper, and adhesive stamps, which may be placed in his hands and remain unaccounted for, conditioned for the faithful return, whenever so required, of all quantities or

amounts undisposed of, and for the payment monthly of all quantities or amounts sold, or not remaining on hand. And it shall be the duty of such collector to supply his deputy with, or sell to other parties within his district who may make application therefor, stamped vellum, parchment, or paper, and adhesive stamps, upon the same terms allowed by law or under the regulations of the Commissioner, who is hereby authorized to make such other regulations not inconsistent herewith, for the security of the United States and the better accommodation of the public, in relation to the matters hereinbefore mentioned, as he may judge necessary and expedient. And the Secretary of the Treasury may from time to time make such regulations as he may find necessary to insure the safe keeping or prevent the illegal use of all such stamped vellum, parchment, paper, and adhesive stamps." Id. 297.

Sect. 161 plainly provides for sales by the Commissioner, while sect. 170 authorizes him to furnish and supply certain officers with stamps for sale to others. Where stamps were purchased either directly from the Commissioner of Internal Revenue, for cash, under sect. 161, or from one of the officers to whom they were furnished for sale and distribution under sect. 170, the purchaser, it is conceded, was allowed commissions according to the rate or scale established by the regulations of the Commissioner. Touching the particular sales made by the appellant, the purchasers of common or general stamps were entitled, respectively, to five per cent commissions, and the purchasers of proprietary stamps to ten per cent. There can be no doubt of this, since his petition distinctly alleges that his sales of common stamps were in amounts of not less than $1,000, and of proprietary stamps in amounts exceeding $500. If, therefore, it be suggested that he was entitled to the difference between the highest rate or per cent allowed by the government (five per cent in purchases of common stamps, and ten per cent in purchases of proprietary stamps), and the amount paid over by him, in stamps, to purchasers, the obvious answer is, that there was in this case no such difference. This interpretation of the statute, we may observe, could, therefore, be of no practical value to him. His contention — and upon no other ground could his claim be sustained — is, that, without reference to the rate of commissions which purchasers

received, although it may have been the highest allowed, he was, nevertheless, given by the statute, to his own use, and as his personal allowance or compensation for distributing stamps, under sect. 170, the *highest rate* of commissions allowed to any one buying from the Commissioner of Internal Revenue.

For instance, upon the theory advanced by appellant's counsel, a purchaser, from the Commissioner of Internal Revenue, of common stamps to the amount, at one time, of $1,000 or more, would be allowed five per cent as commissions, payable in stamps (which, in such cases, would be the full extent of the government's loss), while upon a sale, through an assistant treasurer of the United States, to the same purchaser of the same stamps, in sealed packages, the government would lose altogether ten per cent in commissions, — five per cent to the assistant treasurer, and five per cent to the purchaser; that is, double commissions. In other words, according to that construction of the statute, the government held out an inducement to officers, named in sects. 161 and 170, not to become themselves purchasers, for cash, of stamps for sale and distribution in their respective localities (as they might under sect. 161), but to receive them, under sect. 170, and thereby, without advancing any money, secure for themselves (outside of what the purchasers from them would be allowed), the highest rate which the law allowed in purchases directly from the Commissioner.

We cannot give our assent to any such construction of the statute. The officers, named in sect. 170, were charged, at the outset, with the value of each sealed package of stamps delivered to them for distribution. In the settlement of their accounts they were entitled to be credited with the amount of stamps unsold and returned; with the sums received upon sales, and paid over to the government; and, also, with the value of the stamps placed in the sealed packages, for delivery to purchasers as commissions allowed *to them*. In this way they were relieved from the responsibility assumed when they were supplied with stamps for distribution under sect. 170. The statutory direction that the Commissioner, in such cases, "shall allow the highest rate of commissions allowed by law to any other parties purchasing the same," was an awkward mode

of expressing the idea that the same commissions, up to the highest rate, should be allowed in purchases under sect. 170, as under sect. 161, — that is, that those wishing stamps might purchase from the officers named in sect. 170 at the like rate, even the highest, accorded to "any *other* parties *purchasing* the same" stamps, for cash, directly from the Commissioner.

As to assistant treasurers distributing stamps under sect. 170, we are of opinion that Congress did not intend that they should receive any compensation whatever for services of that character, — certainly not in any case where the commissions paid to those who purchased from such officers were as large as the highest rate prescribed in sales by the Commissioner, for cash, under sect. 161. It was for the better accommodation of the public that the Secretary of the Treasury required assistant treasurers to aid in the distribution of adhesive stamps. The communications addressed to the assistant treasurer of New York, announcing his purpose to adopt that course, show upon their face that the Secretary had no expectation thereby of increasing the loss, in the way of commissions, which the government would sustain upon sales of stamps. He believed that he had the power to impose upon assistant treasurers the duty of distributing internal revenue stamps.

The conclusion we have indicated is in line with the settled policy which has existed upon the subject of extra compensation to officers having fixed salaries or pay, especially in regard to assistant treasurers of the United States.

By an act approved March 3, 1839, c. 82, making appropriations for the civil and diplomatic service, it was declared, that "no officer in any branch of the public service, or any other person whose salaries, or whose pay or emoluments, is or are fixed by law and regulations, shall receive any extra allowance or compensation, in any form whatever, for the disbursement of public money, or the performance of any other service, unless the said extra allowance or compensation be authorized by law." 5 Stat. 349. In a subsequent act of Aug. 23, 1842, c. 183, this prohibition against extra compensation to officers with fixed salaries was somewhat enlarged, and this provision was inserted: "No officer in any branch of the public service,

or any other person whose salary, pay, or emoluments is, or are, fixed by law or regulations, shall receive any additional pay, extra allowance, or compensation, in any form whatever, for the disbursement of public money, or for any other service or duty whatsoever, unless the same shall be authorized by law, and the appropriation therefor explicitly set forth that it is for such additional pay, extra allowance, or compensation." Id. 510. And at the same session of Congress, by an act approved Aug. 26, 1842, c. 202, it was declared that "no allowance or compensation shall be made to any clerk or other officer, by reason of the discharge of duties which belong to any other clerk or officer, in the same or any other department; and no allowance or compensation shall be made for any extra services whatever, which any clerk or other officer may be required to perform." Id. 525.

We come, then, to the act of Aug. 6, 1846, c. 90, under which the appellant was appointed to office, providing for the better organization of the treasury, and for the collection, safe-keeping, transfer, and disbursement of the public revenue. Among the duties imposed by that act upon assistant treasurers was that of doing and performing all duties as fiscal agents of the government which might be imposed by that or any other act of Congress, or by any regulation of the Treasury Department made in conformity to law; and, "also to do and perform all acts and duties required by law, or by direction of any of the executive departments of the government, as agents for paying pensions, or for making any other disbursements which either of the heads of those departments may be required by law to make, and which are of a character to be made by the depositaries hereby constituted, consistently with the other official duties imposed upon them." 9 id. 60. The same act fixed the salaries of the assistant treasurers, and declared: "And these salaries, respectively, shall be in full for the services of the respective officers; nor shall either of them be permitted to charge or receive any commission, pay, or perquisite, for any official service, of any character or description whatsoever." Id. 65. The foregoing provisions in the acts of 1839, 1842, and 1846 have been preserved in sects. 1763, 1764, 1765, and 3597 of the Revised Statutes. They were all in

force when the general revenue statute of 1864 was passed. Commenting upon the act of Aug. 23, 1842, this court in *Stansbury* v. *United States* said: "The law was passed to remedy an evil which had existed of detailing officers with fixed pay to perform duties outside of their regular employment, and paying them for it, when the government was entitled, without this double pay, to all their services. The law prohibited, and was intended to do so, the allowance of such claims as these, made by public officers, for extra compensation, on the ground of extra services." 8 Wall. 33, 37.

It will be observed that while the act of Aug. 23, 1842, allows an officer having a fixed salary to receive additional pay, extra allowance, or compensation, if "the appropriation therefor explicitly states that it is for such additional pay, extra allowance, or compensation," the act of 1846 contains no such reservation in favor of assistant treasurers of the United States. As to those officers, the statute expressly forbids *them* from receiving "any commission, pay, or perquisite, for any official service of any character or description whatsoever." And so the law is to this day. Rev. Stat., sect. 3597.

Of course these provisions would not avail the government should Congress, by subsequent enactment, allow assistant treasurers to receive, outside of their fixed salaries, commissions, pay, or perquisites for extra services. But, in view of the established policy of the government, as shown in the statutes to which we have referred, the act of 1864 should not be construed as a departure from that policy. Its language does not clearly indicate an intention to allow assistant treasurers additional pay or compensation for such services as those which appellant performed. We are not satisfied that Congress had any purpose to alter the existing statutes in reference to the allowance of extra compensation to assistant treasurers, with fixed salaries. His services in connection with the distribution of adhesive stamps were of a character which, consistently with his other official duties, he might be required to perform. But if they were not, he was not entitled to compensation, because the statute does not explicitly state that he was to receive additional pay therefor.

The views we have expressed are further fortified by the twenty-fifth section of the act of 1864, which declares that "there shall be allowed to collectors, in full compensation for their services, and that of their deputies, a salary of $1,500 to be paid quarterly, and in addition thereto a commission of three per cent upon the first hundred thousand dollars, and a commission of one per cent upon sums above $100,000 and not exceeding $400,000, and a commission of one-half of one per cent on all sums above $400,000, such commissions to be computed upon the amounts by them respectively collected and paid over and accounted for under the instructions of the Treasury Department." According to the argument advanced by counsel for appellant, collectors, notwithstanding the foregoing provision, would be entitled to receive, for their services in distributing stamps, under sect. 170, compensation other and beyond that which sect. 25 of the same act declares shall be "in full compensation for their services." Such was not, as we think, the intention of Congress.

If an assistant treasurer wished to derive personal advantage or profit from the distribution of adhesive stamps, he was at liberty to do so by becoming himself a purchaser, for cash, directly from the Commissioner, under sect. 161. The stamps in that case would become his property, whereas, if received under sect. 170, they remained the property of the government until they were actually sold. By *purchasing* stamps for cash, in amounts of $1,000 and over, he would be allowed, as any other purchaser would be, five per cent as commissions, and upon sales in small amounts by him to others he could realize to his own use the difference between five per cent and the rate (whatever it was) at which the purchaser from him could have obtained stamps directly from the Commissioner. But when he received stamps, under sect. 170, for distribution, he could derive no advantage from their sale, certainly not in cases where the commissions allowed to the purchasers amounted, in sales of common stamps, to five per cent, and in sales of proprietary stamps to ten per cent. Congress never intended that the government should, in any contingency, lose on sales of adhesive stamps, by whomsoever and in whatsoever quantities made, more than five per cent of the face value of common

stamps, and more than ten per cent of the face value of proprietary stamps.

Judgment affirmed.

MR. JUSTICE FIELD, with whom concurred MR. JUSTICE BRADLEY, dissenting.

I dissent from the judgment of the court. I think that Mr. Folger was entitled to the difference between the five per cent given by the government and the amount he allowed to the purchasers.

BAMBERGER v. TERRY.

1. A stipulation in writing, signed by the parties and filed with the clerk, that the cause shall be tried by the court, is equivalent to their waiver of a jury.
2. The court is authorized by sect. 954 of the Revised Statutes to allow, at any time during the trial, amendments in the pleadings; and where it has done so, it must, in its discretion, determine whether the submission of the cause ought to be vacated.
3. Where the plaintiff is permitted to amend his declaration so as to avoid a variance between it and the proofs, and it appears that neither the nature nor the merits of the issue are thereby changed, the defendant is not entitled to an order setting aside the submission of the cause for trial.

ERROR to the Circuit Court of the United States for the District of Connecticut.

The parties to this action having stipulated in writing that it should be tried by the court, the following facts were found by it to have been proven: —

On or about Aug. 12, 1875, the firm of S. A. Castle & Co., of the city of New York, consisting of Samuel A. Castle, Rufus E. Hitchcock, and Henry S. McGrane, being insolvent, made an assignment of all their goods and effects, for the joint and equal benefit of their creditors, under the statute of New York of April 13, 1860, to Leopold Bamberger, of that city, who accepted the trust, gave bonds according to law, and entered upon his duties Aug. 12, 1875.

Previously to this time the firm had been the selling agents in that city of the United States Button Company, a joint-stock corporation, duly incorporated in pursuance of the laws of Connecticut, and established in Waterbury. The firm had in their store on Aug. 12, 1875, the manufactured goods of the company theretofore sent for sale upon commission to a large amount, and being the property of the company. Their market value was $7,500. The company had not been in the habit of drawing against its consignments, but prior to that date had obtained from Castle & Co. their accommodation acceptances to the amount of $22,500; and it was agreed between the parties at the time when the acceptances were given that the firm should have, as security against their liability upon them, a lien on the goods which were from time to time unsold. These acceptances had been discounted for the benefit of the company, and were then held and owned by the Waterbury National Bank.

The goods of the company in the possession of Castle & Co. were specified in their inventory, which was duly made and filed, in pursuance of the laws of New York, under the head of "Goods on hand on which allowances have been made, and merchandise in stock," &c., as "consigned by the United States Button Co.," and were appraised at $6,054. The assignee thus had notice of the ownership of the goods. He immediately took possession of them as his own, and as equitably belonging to the creditors of Castle & Co., and proceeded forthwith to sell them as rapidly as he was able for the benefit of the estate. On Sept. 24, 1875, the company took up and received the acceptances from the Waterbury National Bank by the substitution of the company's notes therefor; and thereupon the president of the company carried said acceptances to New York, tendered them to Bamberger, and demanded of him the goods belonging to the company, but he refused to deliver the same, and continued the sale thereof.

The Superior Court of New Haven County, on or about Nov. 1, 1875, appointed Terry, the plaintiff, receiver of the estate of the Button Company, and authorized him, by its decree, to execute the powers specified in the General Statutes of Connecticut. He accepted said trust, gave bonds pursuant to

law, which were accepted by the court, and entered upon his duties.

Nov. 24, 1875, the plaintiff, accompanied by the secretary of the company as a witness, again tendered the acceptances to Bamberger, in the city of New York, and demanded the goods as the property of the Button Company. Bamberger refused to deliver them. The plaintiff then asked him if there were any other acceptances outstanding against the goods, or if there were any other claims or charges against the goods for interest, commissions, &c., except the tendered drafts, to which inquiry Bamberger replied in the negative. Upon the payment of said accommodation acceptances, Castle & Co. were indebted to the Button Company in a large amount, as appeared by the inventory.

The defendant objected to all evidence of the demand of Terry as receiver upon Bamberger, and of his refusal and of the title of Terry to the goods, upon the following grounds:—

"It being conceded by the plaintiff that all the demanded goods at the time of the appointment of said Terry, and continuously until said demand, and until after the bringing of this suit, were in the city of New York, all evidence of demand and refusal and of the title of said Terry is objected to on the ground that said Terry's title is confined to the property of said corporation within the State of Connecticut and the jurisdiction of the State court."

The objection was overruled, whereupon the defendant excepted.

At the close of plaintiff's evidence the defendant moved for judgment in his favor, on the ground,—

1. That the plaintiff's only title to the goods in question is as receiver appointed by the State court of Connecticut.

2. All the goods in question are in New York, and beyond the jurisdiction of the courts of Connecticut.

3. The statutes and courts of Connecticut have no power to give title to goods located beyond the jurisdiction of that State.

The motion was denied, and the defendant excepted.

At the close of the testimony, the plaintiff asked and obtained leave, against the objection of the defendant, to amend the declaration by the addition of counts for a conversion prior

to the plaintiff's appointment. Opportunity was given to the defendant, after the allowance of the amendments, to introduce additional testimony if he desired, but he claimed that a new issue having been raised, he was entitled to a trial by jury upon the whole case.

The court held that the defendant having stipulated to try the case by the court, and having closed his pleadings and presented all his evidence, had waived his right to trial by jury. Judgment having been rendered in favor of the plaintiff, the defendant sued out this writ of error.

Mr. R. B. Warden and *Mr. S. W. Johnston*, for the plaintiff in error.

Mr. S. W. Kellogg and *Mr. George E. Terry*, *contra*.

MR. CHIEF JUSTICE WAITE delivered the opinion of the court.

This record shows that on the 25th of May, 1876, Bamberger, the defendant below, moved that the cause be entered on the jury docket of the court, "pursuant to the statute in such case provided, and as of right he may demand." Afterwards he stipulated in writing that the cause be tried by the court. This was equivalent to a waiver of a jury. The stipulation was duly filed and entered of record. Afterwards the parties appeared and the case was tried by the court. At the close of the testimony, Terry, the plaintiff below, asked and, against the objection of the defendant, obtained leave to amend his declaration so as to avoid a variance between the pleadings and the proof. The defendant then put in a general denial to the amended declaration and demanded a jury trial. This the court refused, but gave the defendant leave to introduce additional evidence, if he desired.

By sect. 954, Rev. Stat., the trial court may at any time permit either of the parties to amend any defect in the process or pleadings upon such conditions as it shall in its discretion, or by its rules, prescribe. This clearly authorizes the allowance of amendments during the progress of a trial in furtherance of justice. When such an amendment is permitted the court must, in its discretion, determine whether any submission which has been made ought to be vacated. Here the

court decided that it ought not, and in this we see nothing wrong. Neither the nature of the case nor the real issue between the parties, as it had been tried, was changed by the amendment. All that had been done was to present by the pleadings, fairly and on its merits, the controversy as it had actually been tried.

Judgment affirmed.

PENNOCK *v.* COMMISSIONERS.

1. Lands in Kansas held in fee-simple by a half-blood member of the tribe of Sac and Fox Indians of the Mississippi under a patent from the United States, issued pursuant to the seventeenth article of the treaty of Feb. 18, 1867 (15 Stat. 495), are not exempt from State taxation.
2. *The Kansas Indians* (5 Wall. 737) distinguished.

ERROR to the Supreme Court of the State of Kansas.

The facts are stated in the opinion of the court.

Mr. George E. Peck and *Mr. Thomas Ryan* for the plaintiff in error.

No counsel appeared for the defendants in error.

MR. JUSTICE FIELD delivered the opinion of the court.

The plaintiff, Sarah A. Pennock, is an Indian, and a member, by "birth, blood, and descent," of the confederate tribes of Sacs and Foxes of the Mississippi. At the date of the treaties of 1859 and 1867, between those tribes and the United States, she was the wife of William Whistler, a member of the same tribe. After his death she intermarried with one Henry Pennock, a white person, a citizen of the United States, and a resident of Kansas, with whom she now lives. In May, 1871, she was the owner in fee of certain lands in Franklin County in that State, which were listed and assessed by its officers for taxes in the same way as other real property in the county. The taxes and charges being unpaid, the lands were sold to pay them, and certificates of sale given. To restrain the issue of deeds to the purchasers, and to set aside the tax sale as illegal, the present suit was brought. The District Court of the

county held the sale illegal, and gave a decree for the plaintiff. The Supreme Court of the State reversed the decree and rendered judgment for the defendants, and the plaintiff has brought the case, on writ of error, to this court.

It is admitted in the record that the plaintiff, though residing with her husband in Kansas, keeps up her relations with her tribe, and the question is presented whether under these circumstances her lands in Kansas are exempt from taxation by that State. With some exceptions not applicable to them, other property within its limits, real and personal, is subject to taxation. The solution of the question depends upon the construction given to the treaties between the United States and the tribes mentioned.

By the treaty concluded with them in October, 1842, they ceded to the United States all the lands west of the Mississippi River to which they had any claim or title, or in which they had any interest. In consideration of the cession it was, among other things, agreed that the United States should pay to them an annual interest of five per cent on $800,000, and discharge certain debts which they had contracted, and that the President should assign to them a tract of land on the Missouri River, or some of its waters, suitable and convenient for Indian purposes, "for a permanent and perpetual residence for them and their descendants." 7 Stat. 596. Pursuant to this latter provision, the President soon afterwards assigned to them a tract of land on the Missouri River, afterwards known as their reservation, situated within what are now the limits of the State of Kansas. The lands were held by them in common until 1860. In the mean time, white settlements had sprung up around them, and they had adopted many of the habits and customs of the white people. It was by comparison of their own condition with that of their white neighbors — at least we may so infer from what subsequently occurred — that they were induced to believe that the continued ownership of their lands in common was not beneficial to them, and that their prosperity would be promoted if limited quantities were held by individuals in severalty. This consideration led to a new treaty, which was concluded on the 1st of October, 1859, and ratified in July, 1860. 15 id. 467. It recited that the tribes

had more lands than were necessary for their occupancy and use, and that they were anxious to promote "habits of industry and enterprise amongst themselves by abolishing the tenure in common" by which they held their lands, and "by assigning limited quantities thereof in severalty to the individual members of the tribes, to be cultivated and improved for their individual use and benefit," and it stipulated, among other things, that a portion of their reservation, amounting to 153,600 acres, should be set apart and retained for that purpose; and that out of it there should be assigned to each member of the tribes, without distinction of age or sex, a tract of eighty acres. It declared that these tracts should not be aliened in fee, leased, or otherwise disposed of by the parties to whom they were assigned, except to the United States or to members of the tribes, and then under such rules and regulations as might be prescribed by the Secretary of the Interior, and that they should be exempt from taxation, levy, sale, or forfeiture, until otherwise provided by Congress.

In order to establish the members of the tribes upon the lands thus assigned to them in severalty, by building them houses and furnishing them with agricultural implements, stock animals, and other necessary aid and facilities for commencing agricultural pursuits under favorable circumstances, the treaty further provided that the lands in the reservation of the tribes which were not thus set apart and retained should be sold, under the direction of the Secretary of the Interior, and the proceeds expended for those purposes, and to pay the debts of the tribes and of the individual members thereof.

These stipulations, which are set forth in the first five articles of the treaty, would be deemed to apply to all members of the confederate tribes, but for the special provisions contained in article 10. The latter relate exclusively to such members as were either "mixed and half bloods," or women, being whole-bloods, who had intermarried with white men. To each of them three hundred and twenty acres were to be assigned from that portion of the land relinquished by the treaty to the United States in trust, provided the parties desired to take such tracts. The lands thus granted were to remain inalienable except to the United States or members of the tribes, and

the grantees were not to participate in the proceeds of the land sold. This article operates as a limitation upon the provisions of the previous articles, and confines them to members of the tribes other than the mixed or half bloods, or the females intermarried with white men. These parties, by accepting the grant of the tenth article, were excluded from the benefits and freed from the restrictions of the other articles, except as they were repeated in it. Under it various tracts of the quantity specified were assigned to the parties coming under the classes designated, and, among others, to Mrs. Pennock, — who is of mixed and half blood, — the plaintiff in this suit, at the time the wife of William Whistler.

In February, 1867, another treaty was concluded with the Sacs and Foxes, which was ratified in October, 1868. 15 id. 495. By it they ceded to the United States all the lands in Kansas to which they had any claim, and agreed to remove to the Indian Territory, where the United States promised to give them for their future home another tract of land. The treaty provided for their removal, the payment of certain debts contracted by them, the erection of various buildings for their use, and other measures designed for their improvement and civilization. It also allowed various parties to select half and quarter sections of land, and provided for the issue of patents to them. Article 17 declared that the half-breeds and full-bloods, who were entitled to selections of land under the treaty ratified in July, 1860, and whose selections had been approved by the Secretary of the Interior, should be entitled to patents in fee-simple for the lands selected, according to certain schedules annexed.

Under this treaty the tribes removed to the Indian Territory, where they now reside, and under the seventeenth article patents were issued to Mrs. Pennock, under her former name of Sarah A. Whistler, and to other parties of a like class, for the tracts of land severally assigned to them under the tenth article of the treaty ratified in July, 1860. Mrs. Pennock did not accompany her tribe, but remained with her white husband in Kansas, having an indefeasible and absolute title to the lands covered by her patent, and having acquired by purchase other tracts from parties to whom similar patents had been

issued. She had renounced all claim to share in the proceeds of lands in the reservation sold by the United States, by accepting the grant under the tenth article of that treaty. Her subsequent relation to her tribe, as a member of it, if she chose to keep it up, cannot affect the jurisdiction of the State over her property for governmental purposes. She might have followed her tribe, — she can now do it; but as that tribe, under a treaty with the United States, has left the State, while she remains, and has taken, not an imperfect title, to be held under the guardianship of the Secretary of the Interior, to be disposed of only to the United States, under regulations to be prescribed by him, but a title carrying with it absolute ownership, with a right of free disposition at her will, she and her property have come under the control of the State, and are subject to its laws, entitled to its protection, and bound to bear a portion of its burdens.

The eighteenth article of the treaty does not, in our judgment, apply to the lands covered by the patent to the plaintiff, or by the patents to the other parties from whom she purchased. Its language is that "All sales hereafter made by or on behalf of persons to whom lands are assigned in this treaty shall receive the approval of the Secretary of the Interior before taking effect or conveying title to lands so sold." This language strictly considered would, it is true, place a limitation upon all subsequent sales, by or on behalf of *persons* to whom lands were assigned under the treaty; but we think the restriction was only intended to apply to the alienation of the *lands* thus assigned, and not to other lands which such persons may have had assigned to them by other treaties. And we are also of opinion that the restriction upon alienation only applies to lands where the sole title of the holder is by the assignment made. When the patent of the government is once issued for the lands, all restrictions upon their alienation, not expressly named, are gone. Without such designation, inability to alienate the property would be inconsistent with the perfect title which accompanies the patent.

There is nothing in the case of *The Kansas Indians*, reported in 5th Wallace, in conflict with these views. There the Indians resided in tribes, though their tribal organizations had been

much broken in upon by their intercourse with the whites. Patents to individual members, enabling them to hold lands in severalty, were accompanied with a condition against alienation without the consent of the Secretary of the Interior. A treaty of the United States with one of the tribes stipulated that their lands should not be liable to "levy, sale, execution, or forfeiture," — terms which were held to prevent a levy and sale by officers of the State for taxes, as well as a levy and sale under judicial proceedings. And the act admitting Kansas into the Union as a State provided that the rights of the Indians in the Territory should remain unimpaired, and the general government be at liberty to make any regulation respecting them and their lands which it would have been competent to make had Kansas not been thus admitted. Their tribal organizations continuing in the State, and the United States treating with them as distinct political communities, the legislature of Kansas could not interfere with their lands or the lands of individual members of the tribes, and subject them to taxation.

Judgment affirmed.

SPRING COMPANY *v.* KNOWLTON.

140-539

103 49
Lud 347
145 407

1. A party to a contract, the making of which, although prohibited by law, is not *malum in se*, may, while it remains executory, rescind it and recover money by him advanced thereon to the other party who had performed no part thereof.
2. The trustees of A., a corporation which was organized under the act of New York of Feb. 17, 1848, for the formation of corporations for manufacturing purposes, and acts amendatory thereof, passed a resolution increasing its capital stock, which was $1,000,000, by the addition of $200,000, allowing each stockholder to take one share of the new stock for every five shares of the original stock which he held, and providing that on his paying in instalments $80 on each share of $100, a certificate as for full-paid stock should be issued to him by the company, and on his failure to pay an instalment of $20 per share on or before a specified date his claim to the new stock should be forfeited, and such forfeited shares divided ratably among the other stockholders who had paid that instalment. A subscription agreement binding the subscribers thereto to take stock and pay $80 per share in instalments as they should be called for by the company, and, on failure to pay any instalment, to submit to the forfeiture of all sums

theretofore paid, was prepared and signed by B., who, being then a trustee of A. and its vice-president, was an active promoter of the scheme for the increase of the stock. He paid but one instalment of twenty per cent on his new stock, and the latter was, by a resolution of the company, declared to be forfeited. The capital stock of the company was afterwards reduced to its original amount, and, to refund the payments made on the new stock withdrawn, bonds were issued. None of them were tendered to or demanded by B. On A.'s refusing to pay him the amount of that instalment, he brought suit therefor. *Held*, that he was entitled to recover.

ERROR to the Circuit Court of the United States for the Northern District of New York.

This suit was brought in 1869 by Dexter A. Knowlton, a citizen of Illinois, against The Congress and Empire Spring Company, in the Supreme Court of the State of New York, to recover the sum of $13,980, with interest from Feb. 20, 1866. In 1876 he died, and the suit was revived and continued by the administrators of his estate. They are citizens of Illinois, and on their application the suit was, March 20, 1877, removed to the Circuit Court of the United States. The parties, by written stipulation, waived a jury. The court tried the case, and found the facts to be substantially as follows: —

The Congress and Empire Spring Company is a corporation organized under the statute of the State of New York of Feb. 17, 1848, authorizing the formation of corporations for manufacturing, mining, mechanical, or chemical purposes, and subsequent acts amendatory thereof. Its capital stock was $1,000,000, divided into ten thousand shares of $100 each, issued in payment of property purchased by the trustees of the corporation for its use.

The mode by which such a corporation might increase its capital stock is prescribed by sects. 21 and 22 of chapter 40 of the laws of 1848.

Sect. 21 prescribes how the notice of a meeting of the stockholders to consider the proposition to increase the capital stock shall be given, and what vote of the stockholders shall be necessary to carry the proposition.

Sect. 22 prescribes how the meeting of the stockholders, called under sect. 21, shall be organized, and declares that if a sufficient number of votes has been given in favor of increasing the amount of capital stock, "a certificate of the proceedings,

showing a compliance with the provisions of this act, the amount of capital actually paid in, . . . the whole amount of debts and liabilities of the company, and the amount to which the capital shall be increased, . . . shall be made out, signed, and verified by the affidavit of the chairman and countersigned by the secretary, and such certificate shall be acknowledged by the chairman and filed, as required by the first section of this act; and when so filed the capital stock of such corporation shall be increased . . . to the amount specified in such certificate, . . . and the company shall be entitled to the privileges and provisions, and subject to the liabilities, of this act, as the case may be."

The corporation passed a resolution, Jan. 11, 1866, to increase its capital stock by the addition thereto of $200,000, for the purpose of building a glass factory for the manufacture of bottles and providing a working capital. It also resolved that the books of the company should be opened for subscriptions to the additional stock, and that each stockholder should be allowed to take one share of the new for every five shares he held of the original stock, and that when he had paid $80 on each share the company should issue to him a certificate as for full-paid stock.

At a meeting of the board of trustees of the corporation, held Feb. 8, 1866, a dividend of four per cent on the original stock was declared, payable Feb. 20, and it was resolved that a call of twenty per cent on the new stock should be made, payable on the latter date; that the books of the company should be at once opened for subscriptions to the new stock; that each stockholder should have the privilege of taking one share of the new for every five shares of the old stock held by him, and that on failure of any stockholder to pay, on or before that date, $20 on each share of the new stock taken by him, all his claim to such new stock should be forfeited and the same divided ratably among the stockholders who had paid the instalment of $20 per share.

In pursuance of the resolutions the trustees immediately issued a stock subscription agreement, by which the subscribers stipulated to take the number of shares set opposite their names and to pay for each share $80, in instalments, as called

for by the directors; and upon failure to pay the instalments within sixty days after call, that the money already paid on the stock should be forfeited to the company. By the same agreement the company bound itself to pay interest up to Feb. 1, 1867, on all sums paid on the new stock, and on Feb. 8, 1867, to issue for every share of said new stock on which $80 had been paid a certificate to the holder as for full-paid stock; and it was provided that the holders of such stock should be entitled to vote thereon, and the same should draw dividends and be treated in all respects as full-paid stock.

This agreement was signed by one C. Sheehan, who subscribed for six hundred and ninety shares of the new stock, he being the holder of thirty-four hundred and ninety shares of the old stock.

Thereupon a contract was made between Sheehan and Knowlton, whereby the former agreed to lend the dividend on his old stock to the latter, who agreed to assume the new stock subscribed for by Sheehan, and pay all future calls thereon. Sheehan's dividend on his old stock amounted to $13,988. Knowlton, in consideration of the transfer to him of this dividend, delivered his note to Sheehan for $13,980, dated Feb. 20, 1866, payable in one year, and secured the same by a pledge of one hundred and fifty shares of the stock of the company. He paid the residue, to wit, $8, in cash.

Knowlton paid to the company, March 8, 1866, the call of twenty per cent on the new stock, subscribed by and sold to Sheehan as aforesaid, by the application thereto of Sheehan's dividend on the old stock, amounting to $13,980, for which the company gave Knowlton a receipt.

About December, 1868, Knowlton paid in full his note to Sheehan for $13,980.

Calls and personal demands were made both upon Sheehan and Knowlton more than sixty days before Jan. 25, 1867, for the payment of subsequent instalments on the stock subscribed by Sheehan, and both of them neglected and refused to pay the instalments called for; whereupon the trustees of the company passed a resolution by which they declared that the new stock subscribed by Sheehan and assumed by Knowlton should be and was forfeited.

From August, 1865, to August, 1866, Knowlton was a trustee and vice-president of the company; he advised the increase of the capital stock above mentioned, proposed the resolutions in relation thereto, moved their adoption, drew up and signed the stock subscription agreement, and advised others to sign it.

At a meeting of the stockholders of the company, held Aug. 7, 1867, it was resolved that the capital stock of the company should be reduced to the original sum of $1,000,000, and that the trustees be authorized to arrange with the holders of the new stock for retiring the same on such terms and conditions as they should deem for the interest of the company.

On the same day the board of trustees met and passed a resolution, whereby the executive committee of the board was authorized to adjust, on the best terms for the company, the claims of all persons holding receipts for payments on the new stock ordered to be retired.

The executive committee passed a resolution, March 27, 1868, that the company issue five-year coupon bonds sufficient to refund the payments made on the new stock of the company which had been retired.

No tender of these bonds was ever made to Knowlton, nor was any demand made for them by him; but he demanded repayment of the amount paid by him on his new stock, and the company refused to repay it or any part of it.

The majority of the holders of the original stock became subscribers for the new stock, and all of them except Sheehan, Knowlton, and one or two subscribers for small amounts, paid the calls made on them in respect to the new stock. The first call of twenty per cent on the new stock was paid mainly by the dividend on the old stock above mentioned, but about $3,000 were paid in cash. All the stockholders who did not subscribe for new stock were paid their part of the dividend in cash. About $86,500 of said five per cent bonds were issued by the company to retire the new stock.

As a conclusion of law from these facts, the court held that the plaintiffs, as such administrators, were entitled to judgment against the Congress and Empire Spring Company for the sum of $13,980, with interest from Feb. 20, 1866, and

rendered judgment accordingly. The company sued out this writ of error.

It appears by a bill of exceptions that the defendant's counsel requested the court below to decide that the proceedings of the defendant in increasing its capital stock, and forfeiting the amount paid by the plaintiffs' intestate, were in all respects legal and valid. The court refused so to find, and ruled that the plan devised by him and the other trustees of the company was contrary to the provisions of the statute, against public policy, and a fraud upon stockholders not consenting thereto, and the public.

It further appears that the defendant's counsel requested the court to decide that, inasmuch as the intestate devised, counselled, and assisted in passing and adopting all the acts and resolutions for an increase of stock by the company, the plaintiffs were not entitled to recover. The court refused so to decide, and ruled that the intestate had a right to abandon the illegal transaction to which he was a party, and that by declining to pay further calls, and demanding repayment of the payments made before the consummation of the illegal scheme, he did abandon it, and his representatives were entitled to recover. To these refusals and rulings the defendant's counsel excepted.

The errors assigned here are that the court below erred in each of its refusals and rulings, and in deciding that the plaintiffs were entitled to recover.

Mr. Francis Kernan and *Mr. Charles S. Lester* for the plaintiff in error.

1. The scheme and contract to increase the stock were in violation of the statute under which the company was organized, and against public policy. *Knowlton* v. *Congress & Empire Spring Co.*, 57 N. Y. 518. That statute expressly requires that all stock shall be paid for at its par value in money, or in such property as is necessary to enable the company to carry on its business. 2 Rev. Stat. N. Y. 507, sect. 49; id. 505, sect. 40; id. 504, sect. 38; id. 505, sect. 41. By this scheme it was stipulated and agreed that scrip for stock should be issued of the nominal or par value of $100 per share on payment of only $80 per share. The first instalment of

$20 of the $80 was intended to be and was paid by applying thereto a dividend of four per cent declared on the old stock. The corporation would thus actually receive only $60 in money per share for the new stock from the subscribers thereof.

2. Knowlton was *particeps criminis* and *in pari delicto* as to the scheme and contract, by which the rights of non-assenting stockholders, creditors, and the public were to be sacrificed. The company could and did become a party thereto only by the action of its trustees and officers. He was a trustee and its vice-president when he originated, actively promoted, and participated in carrying out this scheme. An officer of a corporation who by his advice, votes, and action involves it in such schemes, and who as an individual becomes a party thereto, is at least *in pari delicto* with it. In fact and in law he is the criminal. *Thomas* v. *City of Richmond*, 12 Wall. 349, 356.

3. The plaintiffs were not entitled to recover.

a. Where the scheme or contract is *malum in se*, as in this case, and the parties to it are *in pari delicto*, the law refuses to aid either against the other. It leaves them where it finds them. This rule applies as fully where money has been paid and applied in part execution or performance, as where the scheme or contract has been completely executed. Smith, Contracts (3d Am. ed.), 187–191; *Burt* v. *Place*, 6 Cow. (N. Y.) 431; *Nellis* v. *Clarke*, 20 Wend. (N. Y.) 24; s. c. 4 Hill (N. Y.), 424; *Smith* v. *Hubbs*, 10 Me. 71; *Schermerhorn* v. *Talman*, 14 N. Y. 94, 141; *Knowlton* v. *Congress & Empire Spring Co.*, 57 N. Y. 518; *Howson* v. *Hancock*, 8 T. R. 575.

The scheme was, however, actually carried into effect as to the money which the plaintiffs seek to recover. Their intestate had no *locus penitentiæ* as to the dividend of four per cent on the old stock, payable February 20, and amounting exactly to $13,980, the percentage on the new stock, payable at the same time and place. The dividend was then applied to the payment and satisfaction of that percentage which Knowlton was to pay on the new stock.

b. Had Knowlton paid or advanced moneys to the company, his right of recovery, if it could be enforced at all, would be

solely by virtue of his original title to them. But as he did not advance them, there is no promise or obligation, expressed or implied, on the part of the company to pay him.

4. The record presents no Federal question. This suit, after the court of last resort in New York had reversed the judgment in favor of Knowlton, and ordered a new trial, was, on his death, revived and continued in the court of original jurisdiction, in the name of his administrators. It was subsequently removed therefrom to the Circuit Court, upon the ground of the citizenship of the parties. The questions involved relate to the statutes under which the company was organized, and to the public policy and law of New York. The Commission of Appeals of that State adjudged and determined, after full argument and consideration, that Knowlton was not entitled to recover. As the decision was made in this suit between the same parties and on the facts now presented, it would be held on a retrial in the courts of New York to be *res judicata.*

It is submitted that this court, in accordance with its established rule, should follow that decision. *Jefferson Branch Bank* v. *Skelly*, 1 Black, 436; *Elmendorf* v. *Taylor*, 10 Wheat. 152; *Township of Elmwood* v. *Marcy*, 92 U. S. 289; *Fairfield* v. *County of Gallatin*, 100 id. 47; *Scipio* v. *Wright*, 101 id. 665.

Mr. H. M. Ruggles, contra.

MR. JUSTICE WOODS, after stating the case, delivered the opinion of the court.

The plaintiff in error claims that the plan adopted by it to increase its capital stock, by which certificates as for full-paid stock were to be issued on the payment of eighty per cent thereof, was against the law and public policy of the State of New York, and was, therefore, void; that Knowlton, having been an active party in devising this scheme, and having paid his money in part execution of it, his legal representatives cannot recover the sum so paid.

It is conceded by the defendants in error that the plan adopted by the company to increase its stock was in violation of the law of New York, and therefore void. It has been so held, in effect, by the Court of Appeals of the State of New

York, in the case of *Knowlton* v. *Congress & Empire Spring Co.*, 57 N. Y. 518.

We are, then, to consider whether, upon the hypothesis that the plan for the increase of the stock was illegal, there can be a recovery upon the facts of the case as found by the Circuit Court.

We think it clear that there was only a part performance of the illegal contract between the company and Knowlton in reference to the new stock, for which Sheehan subscribed and which he agreed to transfer to Knowlton.

The company, in fact, created no new stock. It only proposed to do so. To increase the stock of the company it was not only necessary that the meeting of the stockholders should be called, as prescribed by the law, and a vote of two-thirds of all the shares of stock should be cast at the meeting in favor of the increase, but that there should be a certificate of the proceedings, showing, among other things, a compliance with the provisions of the law, and the amount of the increase of the stock, signed and verified by the affidavit of the chairman of the meeting at which the increase was voted, and countersigned by the secretary, and such certificate should be acknowledged by the chairman and filed, as required by the first section of the act. And the law declared that "when so filed the capital stock of such corporation shall be increased to the amount specified in such certificate."

It does not appear from the findings of the Circuit Court that any such certificate was ever made or filed. Consequently it does not appear that the steps necessary, under the law, to an increase of the stock were ever taken. Neither does it appear that any scrip or certificates were ever issued to the subscribers to the new stock. So that all that was done amounted only to a proposition by the company, on the one hand, to increase its stock, and an agreement by Knowlton to take certain shares of the new stock when issued, and the payment by him of an instalment of twenty per cent thereon. There was no performance of the contract whatever by the company, and only a part performance by Knowlton.

It is to be observed that the making of the illegal contract was *malum prohibitum* and not *malum in se*. There is no moral

turpitude in such a contract, nor is it of itself fraudulent, however much it may afford facilities for fraud.

The question presented is, therefore, whether, conceding the contract to be illegal, money paid by one of the parties to it in part performance can be recovered, the other party not having performed the contract or any part of it, and both parties having abandoned the illegal agreement before it was consummated.

We think the authorities sustain the affirmative of this proposition.

Their result is fairly stated in 2 Comyn on Contracts, 361, as follows: —

"Where money has been paid upon an illegal contract, it is a general rule that if the contract be executed and both parties are *in pari delicto*, neither of them can recover from the other the money so paid, but if the contract continues executory and the party paying the money be desirous of rescinding it, he may do so and recover back by action of *indebitatus assumpsit* for money had and received. And this distinction is taken in the books that where the action is in affirmance of an illegal contract, the object of which is to enforce the performance of an engagement prohibited by law, clearly such an action can in no case be maintained, but where the action proceeds in disaffirmance of such a contract, and instead of endeavoring to enforce it presumes it to be void and seeks to prevent the defendant from retaining the benefit which he derived from an unlawful act, then it is consonant to the spirit and policy of the law that the plaintiff should recover."

Mr. Parsons, in his work on Contracts, vol. ii. p. 746, says: —

"All contracts which provide that anything shall be done which is distinctly prohibited by law, or morality, or public policy, are void, so he who advances money in consideration of a promise or undertaking to do such a thing, may at any time before it is done rescind the contract and prevent the thing from being done and recover back his money."

To the same effect see 2 Addison, Contracts, sect. 1412; Chitty, Contracts, 944; 2 Story, Contracts, sect. 617; 2 Greenl. Evid., sect. 111.

The views of the text-writers are sustained by a vast array of authorities, both English and American.

A few will be cited. *Taylor* v. *Bowers* (1 Q. B. D. 291) was an action to recover property assigned for the purpose of defrauding creditors. A verdict was rendered for the plaintiff, with leave to move to enter a verdict for the defendant. A rule was obtained on the ground that the plaintiff could not by the allegation of his own fraud get back the goods from the defendant. The Queen's Bench sustained the verdict, the Chief Justice, Cockburn, delivering the opinion. The defendant then appealed to the Court of Appeals, where the judgment was affirmed. Both courts agreed that an illegal contract partially performed might be repudiated and the money paid upon it recovered.

Lord Justice Mellish, in the Court of Appeals, said: "If the illegal transaction had been carried out, the plaintiff himself, in my judgment, could not afterwards have recovered the goods. But the illegal transaction was not carried out; it came wholly to an end. To hold that the plaintiff is entitled to recover does not carry out the illegal transaction, but the effect is to put everybody in the same situation as they were before the illegal transaction was determined upon, and before the parties took any steps to carry it out. That, I apprehend, is the true distinction in point of law. If money is paid or goods delivered for an illegal purpose, the person who had so paid the money or delivered the goods may recover them back before the illegal purpose is carried out; but if he waits till the illegal purpose is carried out, or if he seeks to enforce the illegal transaction, in neither can he maintain an action; the law will not allow that to be done."

The same rule substantially is laid down in the following English cases: *Lowry* v. *Bourdieu*, 2 Doug. 452; *Tappenden* v. *Randall*, 2 Bos. & Pul. 467; *Hastelow* v. *Jackson*, 8 Barn. & Cress. 221; *Bone* v. *Ekless*, 5 H. & N. 925; *Lacaussade* v. *White*, 7 T. R. 531; *Cotton* v. *Thurland*, 5 id. 405; *Mount* v. *Stokes*, 4 id. 561; *Smith* v. *Bickmore*, 4 Taunt. 474.

In *Morgan* v. *Groff* (4 Barb. (N. Y.) 524), it was held that money paid on an illegal contract, which remains executory,

can be recovered back in an action founded on a disaffirmance, and on the ground that it is void.

To the same effect are the following cases: *Utica Insurance Co.* v. *Kip*, 8 Cow. (N. Y.) 20; *Merritt* v. *Millard*, 4 Keyes (N. Y.), 208; *White* v. *Franklin Bank*, 22 Pick. (Mass.) 181; *Lowell* v. *Boston & Lowell Railroad Corporation*, 23 id. 24.

In *Thomas* v. *City of Richmond* (12 Wall. 849) this court cites with approval the note of Mr. Frere to the case of *Smith* v. *Bromley* (2 Doug. 696), to the effect that a recovery can be had as for money had and received when the illegality consists in the contract itself, and that contract is not executed; in such case there is a *locus penitentiæ*; the *delictum* is incomplete; the contract may be rescinded by either party.

The rule is applied in the great majority of the cases, even when the parties to the illegal contract are *in pari delicto*, the question which of the two parties is the more blamable being often difficult of solution and quite immaterial. We think, therefore, that the facts of this case present no obstacle to a recovery by Knowlton's administrators of the sum paid by him on the stock which had been subscribed for by Sheehan.

The law of New York does not in express terms forbid a corporation from issuing certificates for full-paid stock when the stock has not been fully paid. The illegality of such an issue is deduced from several sections of the law under which the Congress and Empire Spring Company was organized, namely, sects. 38, 40, 41, and 49. We think it is fairly inferable from the record that the trustees of the company, one of whom was Knowlton, did not know that the plan adopted by them for the increase of the stock was illegal, and that when they discovered that it was forbidden by the law, and before any harm was done or could have been done, the scheme was abandoned. Under such circumstances, the rule which would prevent the recovery of the money paid to carry on the illegal plan would be a very harsh one, not founded on any law or public policy.

It is suggested by counsel for the plaintiff in error that the Court of Appeals of the State of New York has in this identical suit, upon the same state of facts, adjudicated the rights of

the parties, and that this court ought to consider the questions raised in this case as *res judicata*.

The reply to this suggestion is that it nowhere appears in the record that this case was ever before the Court of Appeals, or that it was ever decided by any court except the United States Circuit Court for the Northern District of New York, from which it has been brought to this court on error. We cannot consider facts not brought to our notice by the record.

Judgment affirmed.

MR. JUSTICE HARLAN dissenting.

This action was commenced in the Supreme Court of the State of New York. The present transcript is imperfect in that it does not contain all the proceedings in the courts of the State up to the removal of the case into the Circuit Court of the United States. It is, however, conceded, in the briefs of counsel, that Knowlton recovered in the Supreme Court a judgment which, upon a writ of error from the Commission of Appeals, was reversed upon the grounds stated in *Knowlton* v. *Congress & Empire Spring Co.*, 57 N. Y. 518. The learned district judge who tried the case commences his opinion, which is incorporated in the transcript, with the statement that "this case comes here by removal from the State court, after a decision adverse to the plaintiff by the Commission of Appeals, reversing the judgment of the Supreme Court in favor of plaintiff, and ordering a new trial. 57 N. Y. 518." He then proceeds to determine it upon principles of law different from those announced in that decision. Had it been again tried in the Supreme Court, judgment must have been rendered against these defendants in error, because the reversal was upon such grounds as precluded any recovery whatever by them. That decision should, in my opinion, have been accepted as the law of this case, although the proceedings in the Commission of Appeals are not set forth in the transcript. The reported case shows, beyond question, that it is the identical case now before us; at any rate, that it was between these parties and involved the same issues. We know that the adjudication of that court was long prior to the removal of this case, and

that the questions arising upon this record have been once determined by a court of competent jurisdiction in a suit between the same parties touching the subject-matter now in controversy. All this plainly appears by that decision, the legal effect of which, the defendants in error should not be permitted to escape by removing the case into the Circuit Court.

Upon these grounds, and without expressing my own views upon the propositions of law discussed in the opinion of the court, I dissent from the judgment just rendered.

MITCHELL v. OVERMAN.

16 354

Where the complainant dies after the term at which the cause on its submission for final hearing upon the pleadings and proofs was continued by an order of *curia advisare vult*, the decree in his favor entered as of that term cannot be impeached by the defendants upon the ground that it was rendered subsequently to his death.

ERROR to the Circuit Court of the United States for the Southern District of Ohio.

The facts are stated in the opinion of the court.

Mr. Rufus King and *Mr. Lawrence Maxwell, Jr.*, for the plaintiff in error.

Mr. Stanley Matthews and *Mr. William M. Ramsey* for the defendant in error.

MR. JUSTICE HARLAN delivered the opinion of the court.

Conrad Stutzman brought suit, July 26, 1866, against Robert Mitchell and others, in the District Court for the county of Webster, a court of general jurisdiction, in the State of Iowa. Two of the defendants, although duly served with process, failed to appear, and a decree *pro confesso* against them was rendered by the court, at its October Term, 1868. As to all the other parties, the plaintiff and the defendants being present in person, or by counsel, "the cause" (as appears by

the recitals in the record) "was submitted upon the pleadings and proofs on file; and, after argument of counsel, the cause was then finally submitted, and taken under advisement by the court, the decree herein to be rendered as of the term of said trial and submission." At the October Term, 1870, Mitchell "asked leave to amend his answer, which was granted, at the May Term, 1871, upon terms." At the October Term, 1872, that "amendment was stricken from the files for non-compliance with such terms;" and thereupon the court, at the last-named term, to wit, on Nov. 10, 1872, rendered a decree in favor of Stutzman against Mitchell for the sum of $3,395.58, with interest thereon at the rate of six per cent per annum, from Oct. 16, 1868, and for the costs. It was further ordered that the decree be "entered now [then], as of the sixteenth day of October, 1868, the last day of the October Term of this court, 1868, and shall take effect as of that date."

It appears that on the 10th of November, 1869, while the case was held under advisement, Stutzman died intestate. No suggestion of his death was entered of record, nor was the suit revived in the name of his personal representative, to whom, under the laws of Iowa, the right of action survived. Indeed, letters of administration upon his estate were not issued until Nov. 26, 1872.

At the time the decree was rendered, Mitchell and his attorney were ignorant of Stutzman's death, but the fact was known to Stutzman's attorney of record, who drafted and procured the entry of the decree. It is, however, found by the court below, to which this cause was submitted upon a written stipulation, waiving a jury, that there was no fraud in obtaining the decree.

Upon the decree, Overman, administrator of Stutzman, on the 15th of September, 1873, commenced this action against Mitchell. A recovery is resisted on the ground that the decree is absolutely void, inasmuch as it was in fact rendered after the death of Stutzman. Judgment was rendered against Mitchell for the full amount of the decree. He sued out this writ, and assigns for error that the facts found do not authorize the judgment.

The common law was in force in Iowa during the whole period from the commencement to the conclusion of the suit in the State court, except as modified by sects. 3469, 3470, 3472, 3473, 3477, and 3478 of the Iowa Code of 1860, and by the act of April 8, 1862. The latter act — of which, as well as of the State code, we must take judicial notice — substitutes for one of the sections of the code the following provision: "Actions, either *ex contractu* or *ex delicto*, do not abate by the death, marriage, or other disability of either party, nor by the transfer of any interest therein, if from the legal nature of the case the cause of action can survive or continue. In such cases the court may, on motion, allow the action to be continued by or against his legal representative or successor in interest; but in case of the death of the defendant, a notice shall be served upon his representative, under the direction of the court." Laws of Iowa, 1862, p. 229. These statutory provisions prescribe the manner in which actions may be revived, and the time within which such revivor must take place. But it is clear that they do not provide for a case like the one before us. The question here is, whether the State court was wholly without jurisdiction to enter the decree against Mitchell as of, or make it take effect from, the last day of the term at which the cause, during the lifetime of Stutzman, was finally submitted for determination. We are not informed by any decision, to which our attention has been called, that the Supreme Court of Iowa has passed upon it. The cases cited from that court do not, in our opinion, meet it in the exact form in which it is here presented. It must, therefore, be determined by the rules of practice which obtain in courts of justice in virtue of the inherent power they possess.

The adjudged cases are very numerous in which have been considered the circumstances under which courts may properly enter a judgment or a decree as of a date anterior to that on which it was in fact rendered. It is unnecessary to present an analysis of them, some of which are cited in a note to this opinion. We content ourselves with saying that the rule established by the general concurrence of the American and English courts is, that where the delay in rendering a judgment or a

decree arises from the act of the court, that is, where the delay has been caused either for its convenience, or by the multiplicity or press of business, either the intricacy of the questions involved, or of any other cause not attributable to the laches of the parties, the judgment or the decree may be entered retrospectively, as of a time when it should or might have been entered up. In such cases, upon the maxim *actus curiæ neminem gravabit*, — which has been well said to be founded in right and good sense, and to afford a safe and certain guide for the administration of justice, — it is the duty of the court to see that the parties shall not suffer by the delay. A *nunc pro tunc* order should be granted or refused, as justice may require in view of the circumstances of the particular case. These principles control the present case. Stutzman was alive when it was argued and submitted. He was entitled at that time, or at the term of submission, to claim its final disposition. A decree was not then entered because the case, after argument, was taken under advisement. The delay was altogether the act of the court. Its duty was to order a decree *nunc pro tunc*, so as to avoid entering an erroneous decree.

We attach no consequence to the fact that, while the cause was under advisement, Mitchell asked leave to amend his answer, which was granted upon terms. As they were not complied with, his amendment was stricken from the files. The question must, therefore, be determined as if no amendment had been attempted.

It is scarcely necessary that we should extend this opinion by any comments upon the numerous cases cited in the printed argument of appellant's counsel. In many of them, although the death occurred after the submission of the cause or after verdict, the judgment was, in fact, entered as of a time subsequent to the death. They manifestly have no bearing on this case, where the decree was entered as of a time when the party was alive, and to take effect from the date when it would have been entered but for the act of the court, induced by causes beyond the control of the parties.

It seems to us to be entirely clear that the State court had the power, upon well-settled rules of practice, both in courts of

law and of equity, to enter the decree as of the term when, in the lifetime of Stutzman, the cause, after argument, was finally submitted for decision.

Judgment affirmed.

NOTE.— *Bank of United States* v. *Weisiger*, 2 Pet. 481; *Clay* v. *Smith*, 3 id. 411; *Griswold* v. *Hill*, 1 Paine, 484; *Gray* v. *Brignardello*, 1 Wall. 627; *Campbell* v. *Misier*, 4 Johns. (N. Y.) Ch. 342; *Vroom* v. *Ditmas*, 5 Paige (N. Y.), 528; *Wood* v. *Keyes*, 6 id. 418, 478; *Perry* v. *Wilson*, 7 Mass. 393; *Currier* v. *Lowell*, 16 Pick. (Mass.) 170; *Stickney* v. *Davis*, 17 id. 169; *Springfield* v. *Wooster*, 2 Cush. (Mass.) 62; *Hess* v. *Cole*, 3 Zabr. (N. J.) 116; *Cumber* v. *Wane*, 1 Stra. 426; *Astley* v. *Reynolds*, 2 id. 915; *Tooker* v. *Duke of Beaufort*, 1 Burr. 746; *Trelawney* v. *Bishop of Winchester*, 2 id. 219; *Davies* v. *Davies*, 9 Ves. Jr. 461; *Belsham* v. *Percival*, 8 Hare, 157; 2 Coop. 176; *Green* v. *Cobden*, 4 Scott, 486; *Lawrence* v. *Hodgson*, 1 Y. & J. 368; *Freeman* v. *Tranah*, 12 C. B. 406; *Collinson* v. *Lister*, 1 Jurist, N. S. 835; 20 Beav. 355; *Blaisdell* v. *Harris*, 52 N. H. 191; 2 Daniell, Ch. Pr. (5th Am. ed.) pp. 1017, 1018; Tidd's Pract. (4th ed. with American notes) 952; 1 Barb. Ch. Pr. (2d rev. ed.) 341; Freeman, Judgments, sect. 57, and other authorities cited by those authors.

STOUT v. LYE.

108 66
L.ed 428
150 396
58f 414
58f 906

Pending proceedings in a State court by a national bank, to foreclose a mortgage executed to it by A. and duly recorded, B., his creditor, recovered against him in the Circuit Court of the United States a judgment which, by the *lex loci*, was a lien on the equity of redemption. B. then filed his bill in the latter court against A. and the bank to set aside the mortgage as illegal, or to have certain alleged payments of usurious interest applied to reduce the debt. Shortly thereafter, the State court rendered a decree of foreclosure and sale, which the bank set up in its answer to the bill. The Circuit Court thereupon dismissed the bill. *Held*, 1. That the State court having first acquired jurisdiction of the subject-matter, its decree was a bar to the further prosecution of the suit against A. and the bank. 2. That A. represented all the parties who, pending the foreclosure proceedings, acquired through him an interest in or a charge on the mortgaged land, and that B., although not a party to them, is bound by the decree therein rendered.

APPEAL from the Circuit Court of the United States for the Northern District of Ohio.

The facts are stated in the opinion of the court.

Mr. John Hutchins for the appellants.

Mr. John E. Richie, contra.

MR. CHIEF JUSTICE WAITE delivered the opinion of the court.

This record discloses the following facts: On the 10th of November, 1873, Francis J. Lye executed to the First National Bank of Delphos a mortgage on certain real estate situate in the village of Delphos, Allen County, and within the northern judicial district of the United States in the State of Ohio, to secure his note to the bank for $6,000, dated Nov. 1, 1873, and payable Jan. 1, 1874, which was given to take up in part his old note to the bank then past due. The mortgage was duly recorded in the records of the county, November 10, at which time, under the laws of the State, it took effect. Rev. Stat. Ohio (1880), sect. 4133.

On the 29th of December, 1875, the present appellants, John W. and Jacob O. Stout, brought suit in the Circuit Court of the United States for the Northern District of Ohio, against Lye and Philip Walsh, who were partners, to recover a judgment for $5,106.36 and interest. The first day of the January Term, 1876, of that court was January 4, and process was served on Lye & Walsh, in the suit of the Stouts, January 3. On the 15th of January, 1876, the bank commenced suit against Lye in the Court of Common Pleas of Allen County to foreclose its mortgage. Process was served on Lye in that action January 20. The Stouts were not made parties, the bank having then no actual notice of the pendency of their suit in the Circuit Court.

On the 31st of January the Stouts recovered judgment in their action in the Circuit Court against Lye & Walsh for the full amount of their claim and costs, and on the same day caused an execution to be issued, which was, on the first day of February, duly levied on the lands covered by the bank mortgage. The effect of the judgment, without this levy, was to bind the lands of the defendant for the satisfaction thereof from the first day of the term of the court at which it was rendered, January 4. Id., sect. 5375. On the 23d of February the Stouts commenced this suit in the Circuit Court of the United States for the Northern District of Ohio, making the bank a defendant, in which they sought to set aside the mortgage as illegal for want of authority to take it, or if that could

not be done, to have certain alleged payments of usurious interest applied to reduce the debt. The bank was served with subpœna on the 25th of February, and required to appear on the first Monday in April.

The February Term of the Court of Common Pleas of Allen County began on the 7th of February, and on the 7th of March, during that term, a judgment was rendered in the suit of the bank against Lye for the full amount of his note and interest, and for a foreclosure of the mortgage by a sale of the mortgaged property. The bank answered the suit of the Stouts, setting up the foregoing facts, which being proved by the agreed statement of the parties, the bill was dismissed. From that decree this appeal was taken.

The first question to be decided is whether the appellants are concluded by the judgment of the State court finding the amount due the bank and establishing the lien of its mortgage. If they are, they concede that the decree below is right.

There cannot be a doubt that the State court had jurisdiction of the suit instituted by the bank, and, as was said by Mr. Justice Grier, speaking for the court in *Peck* v. *Jenness*, "It is a doctrine of law too long established to require a citation of authorities, that, where a court has jurisdiction, it has a right to decide every question which occurs in the cause, and whether its decision be correct or otherwise, its judgment, till reversed, is regarded as binding in every other court; and that where the jurisdiction of a court, and the right of a plaintiff to prosecute his suit in it, have once attached, that right cannot be arrested or taken away by proceedings in another court." 7 How. 612, 624. The mere fact, therefore, that the Stouts commenced this suit in the Circuit Court before judgment was rendered in the State court in favor of the bank is of no importance. The point to be decided is whether the judgment in the State court binds the Stouts, they not having been parties to the suit in which it was rendered. The rule is, that where suits between the same parties in relation to the same subject-matter are pending at the same time in different courts of concurrent jurisdiction, a judgment on the merits in one may be used as a bar to further proceedings in the others.

It is also an elementary rule that "if, pending a suit by a

mortgagee to foreclose the equity of redemption, the mortgagor makes a second mortgage, or assigns the equity of redemption, an absolute decree of foreclosure against the mortgagor will bind the second mortgagee or assignee of the equity of redemption." Mitf. p. 73; Story, Eq. Pl., sect. 351. Acting on this rule in *Eyster* v. *Gaff* (91 U. S. 521), we held that an assignee in bankruptcy, appointed pending a foreclosure suit, was barred by a decree against the mortgagor. In this we may have gone somewhat beyond the rulings of the English courts, and of Chancellor Walworth in an anonymous case (10 Paige (N. Y.), 20), but to our minds, under the late bankrupt law, an assignee stands as any other grantee of the mortgagor would stand who acquired title after the commencement of the suit to foreclose the mortgage.

That the suit of the bank was one to foreclose a mortgage, and that it was actually pending when the judgment lien of the Stouts was acquired, are conceded facts. When the suit was begun, Lye, the mortgagor, represented the entire equity of redemption. He had parted with no portion of it voluntarily; and if the Stouts had failed to get their judgment during the January Term, 1876, of the Circuit Court, no one would claim they were not bound by the decree of foreclosure, although not parties to the suit. Neither could it with any propriety be claimed, we think, that they would not be bound if their lien had only taken effect from the date of their judgment. It is true the lien followed by operation of law from a judgment in an adversary proceeding against the mortgagor, and was not created directly by his own voluntary act, but it was the legitimate result of his failure to pay a debt he had incurred, and reached only the equity of redemption that was being foreclosed in the pending suit. It was in legal effect no more and no less than an incumbrance of the equity of redemption by the mortgagor under the operation of the judicial proceedings which had been instituted against him to enforce the payment of a debt he owed. As this incumbrance was created *pendente lite*, there can be no question that it comes within the rule just stated as governing such transfers, unless the rights of the parties are changed because the lien, when created, bound the property from January 4 as against other liens and

conveyances made by the mortgagor. The inquiry is not as to the extent or validity of the lien, but whether the holder is any less an incumbrancer *pendente lite*, because, although his incumbrance was actually created while the suit was pending, it bound the land, for certain purposes, from an earlier date. Confessedly the lien of the bank, if its mortgage was valid, was in any event superior to that of the judgment. The only point in controversy is as to the necessity of making such an incumbrancer a party to a pending suit in order to cut off by a foreclosure his interest thus acquired in an equity of redemption. No doubt the Stouts, as soon as their judgment was rendered, had a lien on the mortgaged property, which for some purposes antedated the foreclosure suit; but until they had secured their lien they would not have been heard to contest the validity of the bank's mortgage, or the amount that was due on the mortgage debt. If they had been made parties when the suit was begun, they could have done nothing by way of defence to the action until they had acquired some specific interest in the mortgaged property. As creditors at large they were powerless in respect to the foreclosure proceedings, but when they obtained their judgment, not before, they were in a position to contest in all legitimate ways the validity and extent of the superior lien which the bank asserted on the property, in which, by the judgment, they had acquired a specific interest. They might have appeared in the Common Pleas and asked to be admitted to defend the bank's suit, or for some other appropriate relief, or they might do what they in fact did, — commence this suit in the Circuit Court in aid of their execution. By this suit, however, they could not deprive the Common Pleas of the jurisdiction it had acquired in the bank's suit, nor take away from the bank its right to prosecute that suit to the end. The two suits related to the same subject-matter, and were in fact pending at the same time in two courts of concurrent jurisdiction. The parties also were in legal effect the same, because in the State court the mortgagor represented all who, pending the suit, acquired any interest through him in the property about which the controversy arose. By electing to bring a separate suit the Stouts voluntarily took the risk of getting a decision in the Circuit Court before the State court settled

the rights of the parties by a judgment in the suit which was pending there. Failing in this, they must submit to the same judgment that has already been rendered against their representative in the State court. That was a judgment on the merits of the identical matter now in question, and it concluded the "parties and those in privity with them, not only as to every matter which was offered and received to sustain or defeat the claim or demand, but as to any other admissible matter which might have been offered for that purpose." *Cromwell v. County of Sac*, 94 U. S. 351, 352. It is true the mortgagor did not set up as a defence that the bank had no right to take the mortgage, or that he was entitled to certain credits because of payments of usurious interest, but he was at liberty to do so. Not having done so, he is now concluded as to all such defences, and so are his privies.

Decree affirmed.

UNITED STATES v. HOUGH.

1. A prayer for instructions which are presented as a whole, is properly refused if any of them is erroneous.
2. A collector of internal revenue gave bond, Sept. 16, 1864, with sureties to the United States, conditioned for the payment of the money received by him for stamps sold, and the return of those not sold, which had been or might be delivered to him under the act of March 3, 1863, c. 74. That act was repealed June 30, 1864. *Held*, that the liability of the sureties was limited to the stamps delivered to him before the last-mentioned date.

ERROR to the Circuit Court of the United States for the Western District of Tennessee.

The facts are stated in the opinion of the court.

Mr. Assistant Attorney-General Smith for the appellant.

Mr. Philip Phillips and *Mr. W. Hallett Phillips*, *contra.*

MR. JUSTICE MILLER delivered the opinion of the court.

Ruel Hough, collector of internal revenue for the first district of Tennessee, was furnished by the Commissioner of Internal Revenue with a large amount of revenue stamps, and on

the sixteenth day of September, 1864, he gave, with sureties, bond to the United States in the sum of $25,000, conditioned for the payment of the money received by him for such stamps, and a faithful return of those not sold, whenever required so to do. Suit was brought on this bond. Treasury transcripts were offered in evidence by the plaintiff, showing a statement of his account in reference to revenue stamps, dated Sept. 30, 1870, by which he was found to be indebted to the United States on that account in the sum of $6,093.78. Evidence was offered by the defendants tending to show a balance of $6,434.75 due to him for salary, commissions, and expenses as disbursing agent, which he, before the institution of the suit, had instructed the accounting officer to convey to the credit of this stamp account, and which was sufficient to satisfy it.

Evidence was also offered tending to show a sum due from Hough to the United States for money received as collector of internal revenue, much larger than the amount of his credit for salary and commissions as disbursing agent.

The case was tried by a jury. There was a verdict for the defendants, on which judgment was rendered. The United States sued out this writ.

The main assignments of error relate to the charge of the court to the jury, and the refusal of the court to charge as requested by counsel for the United States.

With reference to the charge given by the court, while it is found in the bill of exceptions, there is clearly no exception shown to that charge. The bill, after reciting the charge, is immediately followed by the statement that "the district attorney moved the court for a new trial, which motion was overruled by the court, to all which the district attorney excepted, and tenders this his bill of exceptions," &c. No mention is made of any exception or any objection to the charge of the court, and none can be considered here.

Before this, however, the district attorney had asked of the court to give a charge, consisting of four propositions, which are set out, and "which instructions," says the bill, "the court refused to give, and the district attorney excepted."

According to the well-settled rule of this court, if either of these four propositions was erroneous, or, in other words, if all

the charge thus asked was not sound law, the court did right in refusing the prayer which presented them as a whole. See *Johnston* v. *Jones*, 1 Black, 209; *Harvey* v. *Tyler*, 2 Wall. 328; *Lincoln* v. *Claflin*, 7 id. 132; *Beaver* v. *Taylor*, 93 U. S. 46; *Worthington* v. *Mason*, 101 id. 149.

One of the propositions so asked was that, under the bond sued on in this case, the sureties of Hough are liable for all amounts of stamps which the proof shows came to his hand as stamp agent, both before and since the execution of the bond, unless the same had been properly accounted for.

It is true that one condition of the bond is to make a faithful return, whenever so required, of the moneys received by him for such stamped vellum, parchment, or paper, and adhesive stamps, as have been or may hereafter be delivered to him; but it is also a part of the condition of the bond describing the stamps for which they shall be liable, that they were stamps delivered and to be delivered under "the act of Congress to provide internal revenue for the support of the government, approved March 3, 1863," pursuant to the sixteenth section of that act. Now, that act, and especially the sixteenth section of it, was repealed by the act of June 30, 1864, which enacts its own provisions on this subject. The act of March 3, 1863, was, therefore, no longer in existence when the bond was taken which binds the sureties for stamps received under its provisions, and, as the obligation of sureties cannot be extended beyond what they have in terms assumed, they cannot be held liable for stamps furnished under the act of 1864. The date of the bond, be it remembered, was Sept. 16, 1864. The act of 1863 had then been repealed more than two months. Stamps undoubtedly had been delivered, before the repeal of the act of 1863, to Hough which had not been accounted for when the bond was given, and it was competent for the government to take a bond covering the stamps advanced to him under that act.

It was also competent for the sureties to limit their liabilities to stamps received under the act of 1863; and the record shows that they did. The court below told the jury that the sureties were only liable for stamps received by Hough prior to the 30th of June, 1864, the date of the repealing act; and to

this no exception was taken. As we think the court was right in this, the charge asked by the district attorney was properly rejected.

The difficulty seems to have grown out of the use of a form of bond framed under a statute which had been repealed.

Objection is made to the admission of two pieces of evidence designed to show that Hough had applied the credit due him as disbursing agent to the extinguishment of the balance due from him as stamp agent. The objection is not made to the pertinency of the evidence, but to the fact that it was not presented for allowance as a credit to the proper accounting officer of the treasury and rejected, as provided in sect. 951, Revised Statutes.

The answer to this is that the claim itself had been allowed by the proper accounting officer of the treasury, and the point in issue was as to the application of the sum so allowed to one of two distinct claims of the government against him. To such a case the section has no application.

Though there may have been many errors committed in the trial of this case, there are none so presented by the record that we can correct them.

Judgment affirmed.

WALL v. COUNTY OF MONROE.

130-661
43-355
108 74
L.ed 430
511 167

1. A county in Arkansas, when sued on its warrants by a *bona fide* holder thereof for value, may set up any defence to which they were subject in the hands of the original payee.
2. The same rule is applicable where the warrants are issued to the payee, in lieu of others in his favor cancelled by the county court, after it found them to be just claims against the county.
3. Neither the order directing the issue of the original warrants, nor that cancelling them and substituting others in their place, has the force of a judicial determination concluding either the payee of them or the county.

ERROR to the Circuit Court of the United States for the Eastern District of Arkansas.

This is an action upon the warrants of the county of Monroe, Arkansas, which were drawn by the clerk of the county

upon its treasurer, in favor of one Frank Gallagher, and transferred by him to the plaintiff.

The following is a copy of one of them. The others are of like tenor and effect, though some of them are for only $20.

"$50.] [No. 804.

"The treasurer of the county of Monroe will pay to Frank Gallagher or bearer the sum of fifty dollars, out of any money in the treasury for general county purposes and not otherwise appropriated.

"Given under my hand, at office, in Clarendon, Ark., this fifteenth day of September, 1875.

"W. S. DUNLAP, *Clerk*."

They were renewal warrants, drawn in lieu of others which, under the laws of Arkansas, had been called in by the county court for examination, registration, and reissue. The called-in warrants, having been found to be just and legal claims against the county, were cancelled by order of the court, and the clerk was directed to issue new warrants in lieu thereof to the original payee, Frank Gallagher.

The new warrants were purchased in good faith for a valuable consideration by the plaintiff, who, on the refusal of the treasurer to pay them on demand, instituted this action. The answer sets up as a defence that said Gallagher was, at the time the warrants were issued to him, indebted to the county as surety on the official bond of one Ambrose Gallagher, tax-collector of the county, in a sum larger than the amount sued for; that since then the county has recovered a judgment against the said Frank Gallagher for a much larger amount than the warrants in suit; that the judgment was recovered before the transfer of the warrants to the plaintiff, and has not been reversed or modified, and is still in full force and unsatisfied; and it asks that the judgment may be set off against the warrants. The plaintiff demurred to the answer, alleging as the cause of demurrer that its allegations were not sufficient to constitute a defence at law.

Upon the argument of the demurrer the following questions arose: —

First, Is the defendant estopped by the reissue of the war-

rants to set up a defence known to have been existing at the time they were reissued in lieu of the original warrants surrendered to the county court, and by its order cancelled?

Second, Can the claim set up in the answer, if held by the county against the original payee when the warrants were issued or while they were still in his possession, be set up as defence or set-off in a suit by a holder of them for value, who had no notice of such defence when he acquired them?

On which questions the opinions of the judges were opposed, and the demurrer having been overruled, final judgment was rendered for the defendant.

Whereupon, upon motion of the plaintiff, the points on which the disagreement happened were stated under the direction of the judges, and certified to this court for final decision.

Mr. M. T. Sanders for the plaintiff in error.

Under the law of Arkansas, the warrants which are the foundation of this suit are negotiable instruments. Rev. Stat., sects. 602, 603, 605; *Crawford County* v. *Wilson*, 7 Ark. 214; *Carnall* v. *Crawford County*, 11 id. 604; *Gunn* v. *Pulaski County*, 3 id. 427; *Adamson* v. *Adamson*, 9 id. 26; *Brem* v. *Arkansas County Court*, id. 241; *Reiff* v. *Conner*, 10 id. 241; *Jefferson County* v. *Hudson*, 22 id. 595.

Sect. 27, art. 7, of the Constitution of the State gives to the county court exclusive original jurisdiction in the local concerns of the county. It is a court of record. Its judgment allowing demands against the county, and directing the issue of a warrant for their payment, merges them and all pre-existing equities between the parties, and cannot be collaterally impeached.

The transferee of the warrants sued on must be treated as the assignee of the judgment pursuant to which they were issued. A defence which might have been made available against the original claim cannot be set up in an action on the judgment. *Noble* v. *Merrill*, 48 Me. 140; *Guinard* v. *Heysinger*, 15 Ill. 288; *Flint* v. *Sheldon*, 13 Mass. 443; *Ellis* v. *Clarke*, 19 Ark. 420.

The defence here does not arise out of the transaction in which the warrants, all of which bear date in 1875, were issued. It rests upon a claim of the county against the original payee,

who was a surety of the defaulting county tax-collector for the year 1872. Conceding that they are of no higher grade than bills of exchange or promissory notes negotiated after maturity, the county could not avail itself of the defence set up.

The indorsee of an overdue negotiable note takes it subject to all the equities which attached to it in the hands of the payee, if they are connected with the note itself, but not to such as grow out of distinct and independent transactions. *National Bank of Washington* v. *Texas*, 20 Wall. 72, 89; *Oulds* v. *Harrison*, 10 Exch. Rep. 572; *Burrough* v. *Moss*, 10 Barn. & Cress. 558; *Renwick* v. *Williams*, 2 Md. 356.

Mr. Augustus H. Garland, contra.

MR. JUSTICE FIELD delivered the opinion of the court.

The warrants in suit are evidences of indebtedness by the county of Monroe, issued by that branch of its government to which is intrusted, by the laws of the State, the examination and approval of claims against the county. They are orders upon the treasurer of the county to pay out of its funds for county purposes, not otherwise appropriated, the amounts specified. They establish, *prima facie*, the validity of the claims allowed and authorize their payment. But they have no other effect. Their issue determined nothing as to other demands of the payee against the county, or of the county against him. Had there been other claims to be adjusted and settled between the parties, these warrants, if lawfully issued, would have been taken as approved items in the account — nothing more.

The warrants being in form negotiable, are transferable by delivery so far as to authorize the holder to demand payment of them and to maintain, in his own name, an action upon them. But they are not negotiable instruments in the sense of the law merchant, so that, when held by a *bona fide* purchaser, evidence of their invalidity or defences available against the original payee would be excluded. The transferee takes them subject to all legal and equitable defences which existed to them in the hands of such payee.

There has been a great number of decisions in the courts of the several States upon instruments of this kind, and there is

little diversity of opinion respecting their character. All the courts agree that the instruments are mere *prima facie* and not conclusive evidence of the validity of the allowed claims against the county by which they were issued. The county is not estopped from questioning the legality of the claims; and when this is conceded the instruments conclude nothing as to other demands between the parties. The cases will be found collected in notes to the fourteenth chapter of Dillon on Municipal Corporations. The law respecting these instruments is also fully stated by this court in *Mayor* v. *Ray*, reported in the 19th of Wallace. That case was upon warrants of a city and not of a county, a circumstance which does not affect the doctrine. The court, speaking through Mr. Justice Bradley, said: "Vouchers for money due, certificates of indebtedness for services rendered, or for property furnished for the uses of the city, orders or drafts drawn by one city officer upon another, or any other device of the kind, used for liquidating the amounts legitimately due to public creditors, are, of course, necessary instruments for carrying on the machinery of municipal administration, and for anticipating the collection of taxes. But to invest such documents with the character and incidents of commercial paper, so as to render them in the hands of *bona fide* holders absolute obligations to pay, however irregular or fraudulently issued, is an abuse of their true character and purpose." And again: "Every holder of a city order or certificate knows that, to be valid and genuine at all, it must have been issued as a voucher for city indebtedness. It could not be lawfully issued for any other purpose. He must take it, therefore, subject to the risk that it has been lawfully and properly issued. His claim to be a *bona fide* holder will always be subject to this qualification. The face of the paper itself is notice to him that its validity depends upon the regularity of its issue. The officers of the city have no authority to issue it for any illegal or improper purpose, and their acts cannot create an estoppel against the city itself, its taxpayers, or people. Persons receiving it from them know whether it is issued, and whether they receive it for a proper purpose and a proper consideration. Of course they are affected by the absence of these essential ingredients; and all

subsequent holders take *cum onere*, and are affected by the same defect." These observations apply equally to the county warrants in suit, as to the city warrants there considered. And the same reasons which deny to them negotiability in the sense of the law merchant, allow any matter of set-off to them which the county held against the original parties.

The case of *Crawford County* v. *Wilson*, in the Supreme Court of Arkansas, is cited as showing that a different rule prevails in that State. The language of the opinion, that county warrants are endowed with the properties of negotiable instruments, must be read in connection with the point involved, which was whether county warrants were transferable by mere delivery, so as to vest the legal interest in the holder. To this extent they may be called negotiable, but no court of Arkansas has held that they were negotiable in the sense of the law merchant, so as to shut out, in the hands of a *bona fide* purchaser, inquiries as to their validity, or preclude defences which could be made to them in the hands of the original parties. The law is not different there from that which obtains in other States.

The cancellation of the warrants originally issued and the substitution of others in their place did not change their character. Neither that proceeding nor the original auditing of the claims of Gallagher had the force of a judicial determination, concluding either him or the county. There was no litigation on the subject between adversary parties which could give to the result any greater efficacy than the award of an ordinary board authorized to audit claims against a municipal body. *Shirk* v. *Pulaski County*, 4 Dill. 209.

We answer, therefore, the first question certified to us in the negative, and the second in the affirmative, and accordingly affirm the judgment.

Judgment affirmed.

129-332
140-462
143-696

ALLEN v. LOUISIANA.

1. If the provisions of a statute which are unconstitutional be so connected with its general scope that, should they be stricken out, effect cannot be given to the legislative intent, the other provisions must fall with them.
2. Neither the charter of the city of Louisiana, Missouri, approved March 12, 1870, construed with art. 10, sect. 14, of the State Constitution adopted in 1865, nor sect. 17, chap. 63, of the General Statutes of 1865, taken in connection with an amendment to that chapter adopted as sect. 52, March 24, 1870, authorized the city to subscribe to the capital stock of a railroad company organized under the laws of Illinois.
3. A popular vote in favor of a municipal subscription for stock of a railroad company cast at an election held without authority of law does not bind the municipality nor confer the power to make the subscription.

ERROR to the Circuit Court of the United States for the Eastern District of Missouri.

The facts are stated in the opinion of the court.

Mr. S. T. Glover and *Mr. John R. Shepley* for the plaintiff in error.

Mr. James O. Broadhead, contra.

MR. CHIEF JUSTICE WAITE delivered the opinion of the court.

Art. 10, sect. 14, of the Constitution of Missouri, adopted in 1865, is as follows: —

"The General Assembly shall not authorize any county, city, or town to become a stockholder in, or to loan its credit to, any company, association, or corporation, unless two-thirds of the qualified voters of such county, city, or town, at a regular or special election to be held therein, shall assent thereto."

The charter of the city of Louisiana, approved March 12, 1870, contained the following sections as sects. 8 and 9 of art. 3, and sect. 14 of art. 7: —

"SECT. 8. The bonded or funded debt of the city for all purposes, including one hundred thousand dollars subscribed (or to be lawfully subscribed) to railroads terminating at or passing through the city of Louisiana, shall not exceed the sum of two hundred thousand dollars: *Provided, however*, that said debt may be increased to a sum not exceeding two hundred and fifty thousand dollars in all, by ordinance or ordinances properly passed and sub-

mitted to an election under the authority of the city council of all resident taxpayers of the city, that is to say, of all adult persons who shall have been assessed and actually paid a tax on real or personal property for the year or the year previous to the year in which such election shall be held, and at such election the judges holding the same shall require proof of the payment of such tax before recording the vote of any person offering to vote at such election, and a majority of all the legal votes cast at said election shall determine the question for or against such ordinance.

"SECT. 9. The city shall have power to subscribe for stock in any incorporated railroad company connecting with the city of Louisiana, or give a bonus to any institution of learning by submitting an ordinance making the appropriation or authorizing the issue of bonds for any such purpose to a vote of the qualified voters (as provided by section 8) of the city, at any general election held in the city, or any special election expressly ordered, at which election a majority of the votes cast shall be for such ordinance."

"SECT. 14. The city shall not at any time become a subscriber for any stock in any corporation, except as authorized by this or some other act of the General Assembly, but said city may by ordinance appropriate money to aid in opening any road leading to the city, or in other improvements within the city, or in building any bridge within two miles of the city, and which may be deemed of general public benefit to the inhabitants of the city: *Provided, however*, that no appropriation shall be made for any improvement beyond the limits of the city, unless a vote be taken on such appropriation at some general election or special election ordered for that purpose, and a majority of all votes polled be cast in favor of that appropriation."

Under the authority of these provisions of the charter the city council, on the 10th of August, 1871, passed an ordinance, sect. 1 of which is as follows: —

"There shall be an election held at the several places in each ward for the holding general election in the city of Louisiana on the fifth day of September, 1871, on the proposition to take stock in the Clarksville and Western Railroad Company, or in the Quincy, Alton, and St. Louis Railroad Company: *Provided*, the said Quincy, Alton, and St. Louis Railroad Company shall cross the Mississippi River and make its southern terminus within the corporate limits of the said city of Louisiana, at such place as may

be agreed upon by the officers of said Quincy, Alton, and St. Louis company and the city council of Louisiana, to an amount not to exceed fifty thousand dollars ($50,000); said election to be conducted by the same judges and at the same places as the general election held on the Tuesday after the first Monday in March, 1871, and the returns to be made and certified to the city council in the same manner as that of any general election."

Other sections provided for the payment of the subscription in bonds, and for the form of the ballots. Sect. 4 provided that if on counting the votes it appeared that two-thirds of the legal votes cast at the election were in favor of the proposition a subscription might be made, and sect. 5 made provision for a registration of the voters prior to the day of the election.

The Quincy, Alton, and St. Louis Railroad Company was an Illinois corporation, one terminus of whose road was on the bank of the Mississippi River, in the State of Illinois, opposite the city of Louisiana. Before the day of election a full registration of the voters of the city was made, from which it appeared that there were three hundred and fifty-six qualified voters then in the city. On the day appointed an election was held, at which there were three hundred and thirty-six votes cast in favor of the subscription and ten against it. Afterwards the stock was subscribed to the Quincy, Alton, and St. Louis company, and the company having complied with the terms and conditions of the subscription, the bonds were delivered by the city, amounting in the aggregate to $50,000, in the following form: —

"Know all men by these presents, That the city of Louisiana, in the State of Missouri, is indebted to —— ——, or bearer, in the sum of one thousand dollars, lawful money of the United States of America, which the said city of Louisiana promises to pay on the second day of October, 1891, at the treasurer's office in the city of Louisiana, Mo., with interest thereon at the rate of eight per cent per annum, payable annually on the first day of January in each year, upon presentation and surrender of the annexed coupons, as they severally become due and payable. This bond is issued by the city of Louisiana, under authority of the General Assembly of the State of Missouri, entitled 'An Act to amend and reduce into one the several acts incorporating the city of Louisiana,' approved

March 25, 1870; also an ordinance of the city council of the city of Louisiana, No. 628, passed Sept. 26, 1870.

"In witness whereof, the city of Louisiana has caused its seal to be hereto affixed, and the same to be signed by the mayor, and countersigned by the clerk of the city council, at the city of Louisiana, Mo., the fourth day of November, in the year of our Lord eighteen hundred and seventy-one.

[SEAL.] "WM. PARKER,
"*Mayor of City of Louisiana.*

Countersigned, "N. H. GRIFFITH,
"*Clerk City Council.*"

The city paid without objection the first instalment of interest as it fell due, but since that time has been in default. This suit was brought on seventy-nine coupons, past due, of which the plaintiff's intestate was a purchaser for value before maturity without notice.

Upon this state of facts the Circuit Court gave judgment for the defendant, and to reverse that judgment this writ of error has been brought.

The question which lies at the foundation of this case is whether the legislature of Missouri has, by a valid law, authorized the city of Louisiana to subscribe to the capital stock of the Quincy, Alton, and St. Louis Railroad Company, an Illinois corporation. It is conceded that if there was no such law the judgment below was right. It is also conceded that such a subscription could not be made on the vote of a majority of the taxpayers of the city, because the General Assembly is prohibited by the Constitution from granting authority for that purpose except upon the assent of two-thirds of the qualified voters. Neither is it contended that the qualified voters, whose vote is to be taken under sect. 9 of the charter, are not the resident taxpayers specified in sect. 8; but the claim is that, if this unconstitutional provision is disregarded, enough can be found in the other parts of the sections to authorize the subscription.

It is an elementary principle that the same statute may be in part constitutional and in part unconstitutional, and that if the parts are wholly independent of each other, that which is constitutional may stand while that which is unconstitutional

will be rejected. "But," as was said by Chief Justice Shaw, in *Warren* v. *Mayor and Aldermen of Charlestown* (2 Gray (Mass.), 84), "if they are so mutually connected with and dependent on each other, as conditions, considerations, or compensations for each other as to warrant a belief that the legislature intended them as a whole, and that, if all could not be carried into effect, the legislature would not pass the residue independently, and some parts are unconstitutional, all the provisions which are thus dependent, conditional, or connected must fall with them." The point to be determined in all such cases is whether the unconstitutional provisions are so connected with the general scope of the law as to make it impossible, if they are stricken out, to give effect to what appears to have been the intent of the legislature.

It is contended that, with a proper application of these principles, sufficient authority for this subscription can be found either in sects. 8 or 9, art. 3, or sect. 14, art. 7.

As to sect. 8. This section provides, in substance, that the bonded or funded debt of the city, including $100,000 subscribed or lawfully to be subscribed to railroads terminating at or passing through the city, shall not exceed $200,000 without the assent of a majority of the resident taxpayers, but that with the assent of the taxpayers, given in the way pointed out, the debt may be increased to $250,000. It authorizes no subscription to railroad corporations, but recognizes the fact that under certain circumstances such a subscription may be lawfully made, and limits the permanent debt to be incurred for that and other purposes to $200,000, without the consent of the taxpayers, and to $250,000, with their consent. In other words, it is a charter provision against incurring a bonded debt beyond the prescribed amounts. That is the whole scope and effect of this section.

As to sect. 9. This, when taken in connection with the requirements of the Constitution, cannot be construed as being of itself a grant of authority to subscribe, because it makes a subscription dependent on a majority vote of the resident taxpayers, while the Constitution requires the assent of two-thirds of the qualified voters. In the construction of a statute, every word is, if possible, to be given some effect. Nothing is to be

stricken out if it can be avoided. It is not to be presumed that the legislature intended any part to be without meaning. In the light of these maxims of interpretation, the substantial object of this section evidently was to limit to a greater extent than had been done by the Constitution the power to subscribe to the stock of railroad companies connecting with the city. Under the Constitution, a two-thirds vote of the qualified voters, taken under the authority of law, would be enough; but under the charter, the two-thirds vote of the qualified voters required by the Constitution, and a majority vote of the taxpayers, were both necessary. The charter limitation could be repealed. It was in the nature of a legislative regulation which could be dispensed with whenever, in authorizing a particular subscription or otherwise, the legislature should so declare. As it stands, it operates as a charter protection to the taxpayers against the imposition of burdens of this kind by the qualified voters alone, but of itself it authorizes no subscription.

Had there been no constitutional restriction put on the legislature in matters of this kind, the language employed might have been susceptible of a different meaning; but with the Constitution as it is, the entire provision as to the majority vote of the taxpayers, to which the legislature evidently attached special importance, must be stricken out, and that of the Constitution as to the two-thirds vote of the qualified voters inserted by implication, before it can be said that what now appears to be a limitation was, in fact, a positive grant of power. We are clearly of the opinion that this cannot be done consistently with the evident purpose of the law, and, as a consequence, that no authority for the subscription can be found in this section of the charter.

As to sect. 14, art. 7. This clearly gives no affirmative power to subscribe. It is, in effect, nothing more than a provision that no subscription shall be made unless expressly authorized by law, which is but an enactment of what had before become a well-established rule of decision. It authorized appropriations of money for the purposes specified, on a majority vote of the qualified voters at a general or special election, and it recognized the fact, which is no longer disputed, that the legislature might authorize the city, in a proper way, to become

a subscriber to stock in some corporations. This is the full extent of the operation of that section.

These, so far as we can discover from the record, were the only provisions of law relied on in the court below to sustain the subscription for the payment of which the bonds now in question were issued. In this court, however, it is contended that power to make the subscription may be found in sect. 17, chap. 63, of the General Statutes of Missouri, of 1865, taken in connection with an amendment to that chapter, adopted as additional sect. 52, March 24, 1870. Session Acts, pp. 89, 90. Upon this point it is sufficient to say that the Quincy, Alton, and St. Louis company was an Illinois corporation, and under sect. 17 authority was only given to subscribe to the stock of companies organized under the laws of Missouri. By the amendment of 1870 (sect. 52), under certain circumstances, railroad companies of other States might extend their roads into Missouri, "and for that purpose . . . possess and exercise all the rights, powers, and privileges conferred by the general laws of this State [Missouri] upon railroad corporations organized thereunder;" but this did not make them corporations "organized under the laws of Missouri." If, as is argued, the foreign corporation got, as one of the privileges conferred on it by this law, the right to receive municipal subscriptions, it was of no practical value as a privilege until the power to subscribe was in some form given to the municipalities.

It is of no importance that two-thirds of the qualified voters of the city gave their assent to the subscription at the election which was called. It has been uniformly held that until the legislature authorizes an election, a vote of the people cannot be taken which will bind the municipality or confer upon the municipal authorities the power to make such a subscription. The legislative authority to obtain the popular assent is as essential to the validity of the election as it is to the subscription.

Judgment affirmed.

JONES v. VAN BENTHUYSEN.

1. A dealer in tobacco, who is assessed upon his sales thereof when it is in a bonded warehouse, is not liable to be taxed for the revenue stamps required to be affixed thereto before the removal thereof, unless they were at the time of such sales so affixed, whereby they entered into the value of the tobacco and formed a part of the price thereof.
2. It is error to instruct touching the law applicable to facts of which there is no evidence.

ERROR to the Circuit Court of the United States for the District of Louisiana.

The facts are stated in the opinion of the court.

Mr. Assistant Attorney-General Smith for the plaintiff in error.

Mr. John D. Rouse and *Mr. William Grant, contra.*

MR. JUSTICE MILLER delivered the opinion of the court.

Sidney A. Stockdale, late collector of internal revenue at New Orleans, was sued by Van Benthuysen to recover a tax illegally exacted of him. The case was tried by a jury, and a verdict and judgment rendered for the plaintiff below. Stockdale died pending the suit, and this writ is prosecuted by his executrix.

The facts of the case, as presented to the jury, are embodied in a short bill of exceptions, from which it appears that the plaintiff was a commission merchant, whose business was the sale of manufactured tobacco for others; that he stood charged on the books of the assessor of that district with sales of tobacco amounting to $1,256,000, on which was assessed a tax of two per cent, which he paid to the collector under protest.

The ground of this protest is that the sales so made by him, as shown by the bill of exceptions, "were made while the tobacco was in bond, and was situated in the bonded warehouse; that said tax was assessed and collected upon the value of the tobacco and upon the amount of stamps which by law was required to be affixed upon the same before it was released from the bonded warehouse; that the value of the tobacco so

sold was $787,855.67, and the amount of stamps placed upon said tobacco was $468,144.33; and that plaintiff, as a commission merchant, charged his commissions as against his principals, both upon the value of the tobacco in bond and upon the amount invested in said stamps; that the special tax was assessed and collected upon both the value of the tobacco and the amount of the stamps."

The court refused to charge that the tax on the sales made by plaintiff was properly assessed by the defendant on the gross amount of them, namely, $1,256,000; but the jury was instructed that the special tax of two per cent upon the amount of sales of dealers in tobacco could not properly be collected upon the stamps which were required to be affixed upon the tobacco in bond, and that to the extent of the tax upon the stamps, which plaintiff had paid, he was entitled to recover.

The act of July 20, 1868, c. 186, under which these taxes were assessed, enacts that "dealers in tobacco, whose annual sales exceed $100, and do not exceed $1,000, shall each pay $5, and when their annual sales exceed $1,000, shall pay in addition $2 for each $1,000 in excess of $1,000. Every person whose business it is to sell, or offer for sale, manufactured tobacco, snuff, or cigars shall be regarded as a dealer in tobacco." 15 Stat. 125, 152.

Undoubtedly this statute only intended to impose a tax upon the sales of tobacco, and if the dealer was also the owner of stamps to be used in paying the duties on tobacco, he could sell them separately in any quantity, without being liable to a tax for such sales. When unattached to the tobacco they do not enter into its value, and they can be bought and sold at their face value as an independent commodity, to be used when and wherever the purchasers choose to do so. For such sales no tax is imposed upon the seller or the buyer.

On the other hand, we are of opinion that when they are once attached to the tobacco and cancelled, and can never be lawfully used again, they cease to have any separate and independent value, and that which they had previously has become merged into that of the tobacco. All subsequent sales are

made upon the basis of the increased value the tobacco has acquired by the payment of the stamp duty, and can never be estimated apart from this.

It would seem to follow from this that if the stamps for which the plaintiff was charged by the collector were not affixed to the tobacco at the time he made the sale, no tax should be charged to him for that value. On the other hand, if the stamps were affixed at the time of the sale, they then entered into the value of the tobacco purchased, and the broker who made the sale should be taxed on the price of the tobacco as it was sold.

In the case before us it is stated that the aggregate sum of $1,256,000 of sales on which plaintiff paid the tax was made up of a vast number of separate sales, during a period running from April, 1869, to January, 1872, of which he made monthly reports to the assessor. It is obvious that the owner of the tobacco in a bonded warehouse might have sold it without any stamps on it, as the law did not require the stamps to be affixed until it was about to be removed. And we see no reason why a single lot of tobacco might not be sold several times before it came to a purchaser who wished to take it out of the warehouse, when for the first time the stamps would be attached. For such sales as this no tax could be rightfully assessed for the value of the stamps. After the stamps were attached their value necessarily constituted part of the price for which the tobacco sold, and for this price the dealer should be taxed.

It follows that, in deciding the liability of the plaintiff to taxation on these sales, it is important to know in the case of each sale whether the stamps had been affixed to the tobacco at the time of the sale or not.

There is in the bill of exceptions nothing which enables us to ascertain this fact, nor from which the jury could ascertain it. The language of the bill of exceptions is that the sales of tobacco for which the disputed tax was collected "were made when the tobacco was in bond, and was situated in the bonded warehouse," but not a word to show whether the stamps had then been affixed to the tobacco or not.

Under these circumstances we do not think the court was

authorized to charge that, "if the jury found as a fact that such tax had been levied and collected from plaintiff, not only upon the proceeds of tobacco sold in bond, but upon the amount of stamps required to be affixed upon such tobacco before it could be delivered from the bonded warehouse," that to the extent of that sum plaintiff was entitled to recover.

The right to recover did not depend upon the amount of stamps required to enable the tobacco to be taken out of the warehouse, or that might have been affixed long after the sale, but upon whether said stamps were affixed to the tobacco at the time of the sale, and, therefore, entered into the purchase price.

Judgment reversed, with directions to grant a new trial.

BOOGHER v. INSURANCE COMPANY.

1. *Quære*, Does the act of June 1, 1872, c. 255 (17 Stat. 196; Rev. Stat., sect. 914), authorize the review here of an action at law, wherein, pursuant to the practice of the courts of the State in which the Circuit Court was held, the facts were found by a referee.
2. Sect. 700 of the Revised Statutes is the only enactment providing for the review here of a civil cause where an issue of fact has been tried in the Circuit Court otherwise than by a jury.
3. The Practice Act of Missouri declares that an issue of fact in any action may, upon the written consent of the parties, be referred. Where, therefore, the record states that, after a case was called for trial and a jury sworn to try the issue joined, a juror was, by "consent of parties," withdrawn and the case referred to A., this court must assume that such consent, as well as that to waive a jury, was in writing.
4. In order to give this court jurisdiction to determine whether the facts found by the referee, and confirmed by the court below, are sufficient to support the judgment, they must be treated as the finding of the court. Otherwise, there has not been such a judicial determination of them as to make them conclusive here.
5. The ruling that where any portion of the charge to the jury is correct, an exception to the entire charge will not be sustained, reaffirmed, and held to be applicable to a general exception taken to the report of a referee.
6. A bond executed Dec. 22, 1871, to an insurance company by B., its agent, and conditioned for the faithful discharge of his duties, contains a provision that it shall continue and remain in force so long as he "shall be the agent of said company, whether under his existing appointment or any future

one," and until all liabilities on his part, by reason of such agency, "shall have been discharged." Dec. 23, 1873, a new contract entered into between the company and B., whereby the latter was appointed agent, changes the rate of his commissions and contains the following clause: "This contract abrogates all former ones, so far as new business is concerned." *Held*, that the bond of Dec. 22, 1871, was not abrogated thereby.

ERROR to the Circuit Court of the United States for the Eastern District of Missouri.

This was an action by the New York Life Insurance Company against Davis R. Boogher and his sureties, upon a bond executed by them Dec. 22, 1871, and conditioned as follows: —

"Whereas the above bounden Davis R. Boogher has been appointed by said company as their agent for the purpose of procuring applications for life insurance, and performing such other duties in connection therewith as may be intrusted to him: Now, if the said Davis R. Boogher shall pay or hand over all moneys belonging to said company which shall at any time be received by him, or for which he shall be liable, whether the same shall be or shall have been received by him personally and solely, or by, through, or together with any co-partner, co-agent, sub-agent, or other person, including all moneys so received prior to the date of this instrument (if any such there be), as well as that received thereafter, as also all moneys which he now owes, or hereafter may owe, said company, either on account of advances to him or otherwise, and shall faithfully discharge his duties as said agent, then this obligation shall be void, otherwise to remain in full force and effect. It being understood and agreed that this obligation shall not be annulled or revoked without the consent of the above-named company, but shall be and remain in force as long as said Davis R. Boogher shall continue to be the agent of said company, whether under his existing appointment or any future one, and whether such present or future agency be sole, or whether said Davis R. Boogher be joined with any other person or persons, and until all transactions under such agency shall have been finally adjusted and settled, and all liabilities of said Davis R. Boogher by reason thereof shall have been discharged."

Boogher was at that time employed by the company as soliciting agent under a contract of appointment dated Oct. 27, 1871, which took effect November 1 of that year. The contract, after minutely prescribing his duties and the rate of

commission to be allowed upon premiums on policies of insurance effected by or through him, provides for his discharge as agent and the forfeiture of his right to commissions on renewals in the event of any dereliction of duty. A new contract of appointment, made Dec. 23, 1873, differs from the preceding one as to the rate of commissions allowed, and contains the following: —

"14. The commissions as above subject to the stipulations and limitations herein contained, shall continue to be paid to the said agent, or in case of his death, to his personal representatives, for the term of ten years from the date of each policy, provided he shall continue to act exclusively for said company for term of five years; but in case said agent shall be discontinued for cause by said company, then all commissions which would accrue to him under this or any former contract shall be forfeited to said company unconditionally."

"15. This contract abrogates all former ones, so far as new business is concerned."

The breach of the condition of the bond alleged was, that Boogher misappropriated funds of the company amounting to $1,400.

The defendants traversed the breach, and claimed as a special defence, that as the acts complained of related to new business transacted after the date of the second appointment, the bond was abrogated, and that they were therefore released from liability thereunder.

Boogher filed a separate answer by way of counter-claim for $6,000 damages, alleging that the company had broken the contract of Dec. 23, 1873, by refusing to permit him to collect the premiums on insurances effected by him, and by refusing to perform the contract on its part, or to pay him according to its terms.

The company denied any breach on its part of the contract of employment, and alleged that Boogher, prior to the institution of the suit, had been discharged for cause, and that, therefore, all his rights to commissions were unconditionally forfeited.

By the act to regulate practice in civil cases in Missouri, "all or any of the issues of fact in the action may be referred, upon the written consent of the parties." Wag. Stat. 1041, sect.

17; Gen. Stat. 169, sect. 17. "All testimony taken before referees shall be reduced to writing, and if either party shall except to the competency of a witness, or the admission or exclusion of evidence, or any other matter to which exceptions may be taken, the referees, if required, shall state the particulars of the exceptions in their report." Wag. Stat. 148, sect. 39. "The referees shall, in all cases, report . . . showing the . . . proceedings had, and return the same, together with the testimony taken, to the court." Id., sect. 40. "All exceptions to the report . . . shall be in writing, and filed within four days, in term, after the report is filed. . . ." Id., sect. 41. "If exceptions are allowed, the matter may again be referred, with instructions, if necessary; but if the report is confirmed by the court, judgment shall be rendered thereon in the same manner and with like effect as upon a special verdict." Id., sect. 42.

In this case the record shows the following entry: "Now come the parties by their attorneys, . . . and this cause being regularly called for trial, and both parties being ready, it is ordered that a jury come; and thereupon comes said jury, to wit, . . . twelve good and lawful men, duly sworn and impanelled well and truly to try the issues joined herein; and now, by consent of parties, it is ordered that a juror be withdrawn, and said juror being withdrawn, it is ordered that this cause be referred to Amos M. Thayer for final report, subject, however, to exceptions." Under this order the referee tried the cause and made his report, stating the issues tried and his findings of fact and law thereon. The testimony was returned with the report, and certain exceptions taken before him were noted in the return. The defendants appeared in court and objected to the confirmation of the report, filing twenty-two separate exceptions, most of which were to the effect that the findings of fact were not sustained by the evidence. The others were as follows: "4. The conclusions of said referee in said report are not sustained by his findings of fact therein. 5. Said report is erroneous and not in accordance with law. . . . 8. The referee erred in finding that the special plea of release in the answers herein had not been sustained. . . . 15. The referee erred in admitting the accounts mentioned in the report as

evidence against the defendants. 16. The referee erred in admitting incompetent and irrelevant testimony in favor of plaintiff. . . . 19. The referee erred in admitting in evidence a note of $1,000, dated Oct. 8, 1873."

Upon the hearing by the court the evidence was read together with the report, and, after argument, the exceptions were overruled as a whole. To this the defendants excepted generally. A new trial was then moved for, and overruled. To this another exception was noted. The court made the following order and finding: —

"Now come the said parties by their attorneys, . . . and the exceptions to the referee's report herein being submitted to the court, and the same having been duly considered, it is ordered that said exceptions be overruled, and that the report of the referee be and the same is hereby confirmed and approved, and thereupon this cause is submitted to the court upon the pleadings and the report of said referee, on consideration whereof the court finds that the defendant, Davis R. Boogher, is indebted to the plaintiff by reason of the breaches of the writing obligatory sued upon in the sum of twelve hundred and seventeen dollars and fifty-two cents."

Judgment was thereupon rendered against the defendants for the penalty of the bond sued on, to be discharged upon the payment of said sum and costs of suit.

A bill of exceptions was then taken, which sets forth the report of the referee, the testimony before him with the objections noted, the exceptions to the report, the exception to the order confirming it, the motion for a new trial, the order overruling it, and the exception thereto.

The defendants sued out this writ, and assign for error: "1. That the referee erred in finding in favor of the defendant in error, on the counter-claim of Boogher, and the court erred in confirming the finding. 2. The undisputed facts in the case, established by the testimony of the defendant in error, fail to support the finding of the referee, that Boogher was discharged for good cause, because of an 'unauthorized detention of plaintiff's funds,' and the court erred in confirming that finding. 3. The pleadings of the defendant in error are not supported by any evidence; and, 4. The special plea of

discharge was fully sustained, as appears by the pleadings and findings of the referee, and the court erred in not rendering judgment for plaintiffs in error thereon."

Mr. Shepard Barclay and *Mr. Linden Kent* for the plaintiffs in error.

Mr. Frederick N. Judson, contra.

MR. CHIEF JUSTICE WAITE delivered the opinion of the court.

It is, to say the least, doubtful whether cases tried in the circuit courts by a referee, in States where such a practice exists, can be reviewed here. While, since the act of 1872, c. 255 (17 Stat. 196, now sect. 914, Rev. Stat.), the practice, pleadings, and forms and modes of proceedings in civil causes, other than equity and admiralty causes, in the circuit and district courts, must conform, as near as may be, to the practice, pleadings, and forms and modes of proceeding existing at the time in like causes in the courts of record of the State within which such circuit or district courts are held, the review of a case in this court is regulated by the acts of Congress and not by the laws of the States. This was decided in *United States* v. *King* (7 How. 833), where the precise question arose under the act of 1824, c. 181, regulating the practice of the courts of the United States in the district of Louisiana. 4 Stat. 62. The Seventh Amendment to the Constitution provides that "no fact tried by a jury shall be otherwise re-examined in any court of the United States, than according to the rules of the common law." The Judiciary Act of 1789, c. 20, sect. 12 (1 Stat. 80), provided that the trial of issues of fact in the circuit courts should in all suits, except those of equity and of admiralty and maritime jurisdiction, be by jury; but it has always been held that if the parties waived a jury a judgment after trial by the court would not be erroneous. *Kearney* v. *Case*, 12 Wall. 275. Such a judgment, however, would not be reviewable here, because, as was said by Mr. Chief Justice Taney, in *Campbell* v. *Boyreau* (21 How. 223), "if, by agreement of parties, the questions of fact in dispute are submitted for decision to the judge upon the evidence, he does not exercise judicial authority in deciding, but acts rather in the character of an arbitra-

tor. . . . And as this court cannot regard facts found by the judge as having been judicially determined in the court below, there are no facts before us upon which questions of law may legally and judicially have arisen in the inferior court, and no questions, therefore, open to our revision as an appellate tribunal." To get rid of this difficulty and give parties the right of review here, if they submitted their issues to a trial by the court, the act of 1865, c. 86, sect. 4 (13 Stat. 501; Rev. Stat., sects. 649, 700), was passed. In this way it was provided that issues of fact in civil cases in the Circuit Court might be tried and determined by the court, without the intervention of a jury, " whenever the parties, or their attorneys of record, file with the clerk a stipulation in writing waiving a jury. The finding of the court upon the facts . . . shall have the same effect as the verdict of a jury." Provision was also made for presenting for review here by bill of exceptions the rulings of the court in the progress of the trial, and, when the finding was special, for extending the review to the determination of the sufficiency of the facts found to support the judgment.

The doubt we have is whether the act of 1872 enlarged the existing modes of subjecting cases to review here. There is no express provision of that kind, and on its face the act is confined to the practice, pleadings, and modes of proceedings in the circuit and district courts. Any allusion to a review here seems to have been studiously avoided. The act of 1865 was not repealed. On the contrary, that act, as well as the one of 1872, was brought into the Revised Statutes, and it is now, as sect. 700, the only statute which provides for a review here of cases where an issue of fact in a civil cause has been tried in the Circuit Court otherwise than by a jury.

This objection was not raised in the argument, and its final determination may perhaps with propriety be postponed, as, if the trial before the referee is treated as a trial by the court, we think the judgment must be affirmed. In *Kearney* v. *Case* (*supra*), it was held that unless there was a written stipulation of the waiver of a jury filed with the clerk, there could be no review here of a case tried by the court. Such a stipulation in writing is a prerequisite to our right to re-examine. We said, however, in that case (p. 283), if it affirmatively appeared

in any part of the record proper that such a writing was made and filed by the parties, we might take jurisdiction, even though the stipulation itself, or a copy of it, should not be sent up with the transcript.

It nowhere expressly appears in this case that a stipulation was filed, but inasmuch as an action of this kind could not, under the Practice Act of Missouri, be referred without the written consent of the parties, and this was referred by consent, we think we must assume that a consent was given in such form as to authorize what was done under it. The withdrawal of a juror after the trial was begun and the consent to a reference necessarily implied a waiver of a jury; and as this consent to be available must have been in writing, it follows that the waiver which flowed from the consent was also in writing. We think, therefore, it sufficiently appears that the stipulation which the act of Congress requires was entered into.

We have often held that the act of 1865 (sects. 649, 700, Rev. Stat.) does not permit us to consider the effect of the evidence in the case, but only to determine whether the facts found on the trial below are sufficient to support the judgment, and to pass on the rulings of the court in the progress of the trial presented by a bill of exceptions. For all the purposes of our review the facts as found and stated by the court below are conclusive. *The Abbotsford*, 98 U. S. 440, and the cases there cited. Neither can we consider this case unless the facts found by the referee, when confirmed by the court, are treated as the finding of the court. In that way alone can it with propriety be said that the facts have been determined judicially by the court, so as to be made the foundation of a review here of the questions of law properly raised on them in the record.

Upon the facts as found and reported there can be no doubt of the correctness of the judgment. Indeed, no complaint is made, by an assignment of error or otherwise, on that account. This brings us to a consideration of the bill of exceptions, and the only exceptions which we there find to the rulings of the court are: 1, To the overruling of the objections to the referee's report; and, 2, to the order overruling the motion for a new trial. We have many times decided that the rulings of the

circuit courts on motions for a new trial are not reviewable here on writ of error. *Railway Company* v. *Twombly*, 100 U. S. 78. The whole case, therefore, turns on the exception to the overruling of the objections to the report. This exception is a general one, to the single order overruling the twenty-two specific objections as a whole. We have uniformly held that "if a series of propositions is embodied in instructions (to the jury), and the instructions are excepted to in a mass, if any one of the propositions is correct the exception must be overruled." *Johnston* v. *Jones*, 1 Black, 209; *Rogers* v. *The Marshal*, 1 Wall. 644; *Harvey* v. *Tyler*, 2 id. 328; *Lincoln* v. *Claflin*, 7 id. 132; *Beaver* v. *Taylor*, 93 U. S. 46. The same rule should be applied to cases of this kind. Here are, so to speak, a series of propositions in respect to the report of the referee. They were overruled and excepted to in a mass. If one of the propositions was correct, therefore, the exception will not be good. The party should, by his exception, direct the attention of the court to the specific proposition or propositions on which he relies, and separate it or them from the rest.

Among the objections to the report included in the general exception are many relating to the sufficiency of the evidence to support the findings. These cannot be re-examined here. But if we consider the action of the court on the objections to the sufficiency of the evidence as not included in the general exception, the difficulty is not removed, because the five remaining objections embrace separate matters. Some of them are confessedly not well taken, and have not been mentioned here, either in the argument or assignment of errors. Only one is relied on, and that the eighth, which is to the effect that the referee erred in finding that the special plea of release had not been sustained. This, taken in connection with the pleadings, raises the question whether the legal effect of the second agreement between the parties, which was in writing and set forth in the complaint, was to cancel and discharge the bond sued on. We have no hesitation in saying that it did not. The bond was not one of the agreements which that instrument abrogated.

This disposes of the case, and leads to an affirmance of the judgment.

Judgment affirmed.

NATIONAL BANK v. WHITNEY.

1. A national bank may enforce against the mortgagee and parties claiming under him with notice a mortgage of lands executed to it as collateral security for his then existing indebtedness to it, and such as he might thereafter incur.
2. An objection to the taking of such a mortgage as security for future advances can only be urged by the United States.
3. In New York, a mortgage for a past indebtedness, if taken without notice of one for an indebtedness to be subsequently incurred, has precedence, if it be first recorded.
4. Costs are not payable out of the fund in controversy.

134-291
139-77
103 99
L-ed 443
146 248

ERROR to the Supreme Court of the State of New York.

The facts are stated in the opinion of the court.

Mr. Theodore Bacon for the plaintiff in error.

Mr. W. Harris Day, contra.

MR. JUSTICE FIELD delivered the opinion of the court.

It appears from the record that the defendant Whitney, some time previously to 1871, executed to Maria Crocker a mortgage upon certain real property situated in the county of Genesee, in the State of New York, to secure an indebtedness to her; that in a suit brought for that purpose the mortgage was foreclosed and a decree entered for the sale of the premises; that such sale was had, and the amount received satisfied the debt and left a surplus of over $3,800, which was paid into court. The present controversy is between subsequent mortgagees and judgment creditors for this surplus.

On the 12th of January, 1871, Whitney executed a mortgage upon the same premises to the National Bank of Genesee, providing in terms for the payment of $5,000, one year from its date, with interest, but declaring that it was made as collateral security for the payment of all notes which the bank held at the time against him, and for his other indebtedness then due or thereafter to become due. This mortgage was recorded on the 19th of September, 1872. It subsequently appeared from an examination of the accounts between the parties that his

indebtedness at the date of the mortgage was $3,200, and that this was paid before Sept. 16, 1872.

On this last day Whitney executed two other mortgages upon the same property, one to Homer Bostwick and the other to Edward McCormick. The one to Bostwick was executed as security for the payment of liabilities and indebtedness which already had been or might thereafter be incurred by him on account of Whitney, either by indorsement or otherwise, to an amount not exceeding $2,500. This mortgage was recorded at noon on the day of its execution. The amount of the liability subsequently incurred by Whitney to Bostwick exceeded the sum named. The mortgage to McCormick was executed as security for similar liabilities and indebtedness which might be incurred by him for Whitney, to an amount not exceeding $1,500, and was recorded at forty-five minutes past one of the day of its execution. The amount of liabilities incurred by McCormick for Whitney exceeded the sum named.

It is unnecessary to give the particulars of other subsequent incumbrances, as under no circumstances could any of the surplus be applied to their discharge. In any view that can be taken of the mortgages mentioned, the surplus in controversy will be exhausted by them.

The principal question for our determination relates to the validity of the mortgage of Whitney to the national bank, so far as it applies to future advances to him. His indebtedness existing at the execution of the mortgage has been satisfied. His indebtedness subsequently incurred amounted at the sale of the premises to $5,160. If the mortgage for the future indebtedness can be sustained as a valid instrument for that purpose, the entire surplus will be absorbed for its payment, excepting such portion as may be first payable to McCormick, by reason of the fact that he took his mortgage without notice of the one to the bank. It is contended that the mortgage to the bank, so far as it applies to future advances, is invalid, because a mortgage of that character is prohibited by the national banking law. That law, after in terms authorizing every national banking association to loan money on personal security, declares that it "may purchase, hold, and convey real estate for the following purposes, and for no others: *First*, such as may be

necessary for its immediate accommodation in the transaction of its business; *second*, such as shall be mortgaged to it in good faith by way of security for debts previously contracted; *third*, such as shall be conveyed to it in satisfaction of debts previously contracted in the course of its dealings; *fourth*, such as it shall purchase at sales under judgments, decrees, or mortgages held by the association, or shall purchase to secure debts to it."

The question presented is not an open one in this court. It was determined in the case of *National Bank* v. *Matthews*, at the October Term of 1878. It there appeared that Matthews and another person had given their joint note to a mercantile company for $15,000, secured by a deed of trust on certain real property in Missouri, executed by Matthews alone. Soon afterwards the company assigned the note and deed of trust to the Union National Bank of St. Louis, to secure a loan made to it at the time. The loan was not paid at its maturity, and the bank directed the trustee to sell the premises. Matthews thereupon filed a bill to enjoin the sale, and obtained a decree for a perpetual injunction, upon the ground that the loan was made upon real security, which was forbidden by the statute. The Supreme Court of the State affirmed the decree, and the case was brought here, where the decree was reversed and the cause remanded, with directions to the court below to dismiss the bill.

In coming to this conclusion this court considered the transaction in two aspects: first, as not being within the letter of the statute, because the deed of trust was not executed *to* the bank; and, second, as a loan upon real-estate security.

Viewed in the first aspect, the court held that as a mortgage the deed of trust was merely an incident to the note, and a right to its benefit, whether it was delivered or not with the note, passed with the transfer of the latter. If the loan had been made upon the note alone, the benefit of the deed as a mortgage would have inured to the bank by operation of law. Of course that which the law would give independently of a direct transfer by the mortgagee, the statute did not intend to defeat because such transfer was made.

Viewed in the second aspect, as a loan upon real-estate

security, the court observed that, so treating it, the consequence insisted upon did not follow; that the statute did not declare such security void, but was silent on the subject; that had Congress so intended it would have been easy to say so, and it can hardly be presumed that this would not have been done, instead of leaving the question to be settled by the uncertain result of litigation and judicial decision. And after citing numerous cases where a disregard of statutory prohibitions has not been held to vitiate the contracts of parties, but only to authorize actions by the government against them, the court held that the prohibitory clause of the banking law did not vitiate real-estate securities taken for loans, and that a disregard of them only laid the association open to proceedings by the government. "The impending danger," said the court, "of a judgment of ouster and dissolution was, we think, the check, and none other, contemplated by Congress. That has been always the punishment prescribed for the wanton violation of a charter, and it may be made to follow whenever the proper public authority shall see fit to enforce its application."

The construction of the act of Congress thus given has been acted upon by the national banks throughout the country ever since it was published. It is not unreasonable to suppose that they have conducted their business and made loans to a large amount in reliance upon it, and that in many cases great injury would follow a departure from it. Judicial decisions affecting the business interests of the country should not be disturbed except for the most cogent reasons, certainly not because of subsequent doubts as to their soundness. The prosperity of a commercial community depends, in a great degree, upon the stability of the rules by which its transactions are governed. If there should be a change, the legislature can make it with infinitely less derangement of those interests than would follow a new ruling of the court, for statutory regulations would operate only in the future.

The decision in the case cited controls the present case, and in conformity with it we must hold that the mortgage to the bank, so far as the subsequent incumbrances are concerned, is to be regarded as a valid security for the future advances to

the mortgagor. Whatever objection there may be to it as security for such advances from the prohibitory provisions of statute, the objection can only be urged by the government. *Fleckner* v. *United States Bank*, 8 Wheat. 338–355.

But it appears from the record that the mortgage to McCormick was taken by him without notice of the prior mortgage to the bank, which had not then been registered. He has, therefore, a right as against the bank to prior payment of the $1,500 and interest, for which amount his mortgage was a lien upon the premises.

Bostwick took his mortgage with notice of the one to the bank. He cannot, therefore, claim any of the surplus until the debt of the bank is paid. The surplus should, therefore, be first applied to McCormick's claim, and the balance to the claim of the bank.

It follows that the decree of the Supreme Court of New York must be reversed, and the case remanded with directions to enter a decree in conformity with this opinion.

So ordered.

MR. JUSTICE MILLER and MR. JUSTICE HARLAN dissented.

A petition for a rehearing having been filed, MR. JUSTICE FIELD, at a subsequent day of the term, delivered the opinion of the court.

By the decision in this case we held that, in the distribution of the surplus moneys in court, the claim of McCormick should be paid before that of the bank. He took his mortgage without notice of the one to the bank, which had not been registered. The bank now asks a rehearing of the case on this point, contending that, under the decisions of the New York courts, the priority of its mortgage cannot be displaced. It cites the statute of the State to show that the recording act gives priority only to the mortgage first recorded, when that is executed for a valuable consideration, which, according to those decisions, means some new consideration advanced at the time; and that a mortgage for a pre-existing indebtedness is not protected by a prior record, against a non-recorded mortgage for value. Here the mortgage to McCormick was given to secure

— to the extent of $1,500 — a previous liability and indebtedness, and such as might be subsequently incurred. The previous indebtedness at the time equalled the whole amount of the intended security.

There would be force in the position of the bank if its own mortgage stood in any better condition. When the McCormick mortgage was executed — Sept. 16, 1872 — the indebtedness of Whitney to the bank was paid, and his mortgage remained in force only for any future indebtedness which he might incur. For such future indebtedness it could not cut out the mortgage to McCormick, executed for an existing indebtedness, and of which mortgage the bank had notice. For advances afterwards made, the mortgage to the bank was a subsequent incumbrance.

As between two mortgages, — one for a past indebtedness, and one for an indebtedness to be subsequently incurred, — the one for the past indebtedness must have precedence, if first recorded.

The petition for a rehearing by the bank must, therefore, be denied.

The petition of McCormick to be allowed costs out of the fund in court must, according to the usual practice of the court in such cases, be also denied. His costs are chargeable against the bank which contested his right to be paid out of the proceeds in court. If paid out of the fund, they would reduce by their amount the moneys properly applicable to the indebtedness of Whitney.

Petition denied.

CUCULLU v. HERNANDEZ.

1. The failure to inscribe or to reinscribe a mortgage of lands in Louisiana does not affect its validity as against the parties thereto or their heirs.
2. To secure the payment of his note, A., the owner of lands, executed a mortgage of them, which was duly inscribed, but never reinscribed. He subsequently conveyed them to B., who contracted to pay the note as part of the purchase-money, and, to secure it and the remainder of the purchase-money, granted a mortgage of them with vendor's privilege, in the act of sale to him, which was in due time inscribed and reinscribed. After the note was overdue, B. paid interest thereon from time to time; and, to compel him to perform his contract, A. brought suit, which was pending at the time that he filed his bill of foreclosure against B. and C., the latter being the transferee of the note and mortgage executed by A. *Held*, 1. That the prescription as to the note was, against A. and B., interrupted by the payment of the interest, and was suspended during the continuance of that suit. 2. That, notwithstanding the lapse of more than ten years since the inscription of that mortgage, C. is entitled to priority of payment out of the proceeds of the sale of the lands.
3. A party, after contesting, by prolonged litigation, a claim against him, is not entitled to the benefit of art. 2652 of the Civil Code of Louisiana, and cannot cancel it by paying what it cost the party to whom it was transferred.

APPEAL from the Circuit Court of the United States for the District of Louisiana.

The facts are stated in the opinion of the court.

Mr. Joseph P. Hornor and *Mr. William S. Benedict* for the appellant.

Mr. Thomas J. Semmes, contra.

MR. JUSTICE WOODS delivered the opinion of the court.

On Feb. 1, 1850, the complainant, Joseph S. Cucullu, was the owner of certain real estate situate in the parish of St. Bernard, in the State of Louisiana, known as the Myrtle Grove Plantation. On the day mentioned he made and delivered to one E. Villavaso his note of that date for $10,000 borrowed money, due in twelve months, and secured the same by an act of mortgage, dated Feb. 7, 1850, on said plantation; and on Feb. 4, 1853, he made another note, also for $10,000 borrowed money, due in one year, payable to himself, and indorsed and delivered it to the same Villavaso, and secured it by another act of mortgage on said plantation. No part of the money

which Cucullu by these notes promised to pay has ever been paid. The mortgages executed to secure the notes were duly inscribed in the proper mortgage office, but have never been reinscribed.

On Sept. 28, 1857, Cucullu sold and conveyed the Myrtle Grove Plantation to one Augustus W. Walker for the purchase price of $135,000. Twenty-five thousand dollars of the consideration was paid in cash, and for the residue Walker gave his notes, two for $5,000 each, both payable Jan. 31, 1858; six for $13,333, payable respectively on December 10 in the years 1858, 1859, 1860, 1861, 1862, and 1863; and he assumed to pay for Cucullu the two notes above mentioned, made by him for $10,000 each, payable to Villavaso. To secure the payment of these obligations for the purchase-money, including the Villavaso notes, Walker, in the act of sale from Cucullu to him, granted a mortgage on the Myrtle Grove Plantation, with vendor's privilege in favor of Cucullu.

The two notes for $5,000 were never paid; it is conceded that they are prescribed, and they do not appear in this case.

Walker paid in full the second of the notes for $13,333, being the one which fell due Jan. 10, 1859, and one half of the first note for $13,333, being the one which fell due Jan. 10, 1858. The other half of this note, with interest, and the four other notes for $13,333, remain wholly unpaid. These unpaid notes of Walker were all claimed by Cucullu, in the bill filed in this case, to be his property.

The mortgage granted in the act of sale by Walker to secure the obligation entered into by him for the payment of the purchase price of the Myrtle Grove Plantation was duly inscribed and twice reinscribed in the mortgage office, according to law, thus preserving the privilege of the mortgage. By act dated Feb. 4, 1858, between Villavaso and Walker, the time for the payment by the latter of the Cucullu notes was extended until Feb. 1, 1859.

In 1860 Cucullu, desiring that the notes for $10,000, given by him to Villavaso, and secured by mortgages on the Myrtle Grove Plantation, should be paid off by Walker, who had assumed their payment in the manner above mentioned, began a suit against Walker in the District Court for the Parish of St.

Bernard, to compel him to pay them, and he prayed that Walker be ordered and adjudged to discharge the said Villavaso mortgages. To this suit Walker filed an exception, in which he alleged that the petition disclosed no cause of action; the exception was overruled. Walker then filed an answer, denying that the Villavaso notes were due, and alleging that they had been extended and renewed. The court gave a decree for Cucullu, treating the suit as one to enforce the specific performance of Walker's contract to pay the Villavaso notes and mortgages. This decree was reversed by the Supreme Court of Louisiana, on the ground that Villavaso was not made a party to the suit, and the cause was remanded in order that Villavaso might be brought in.

Thereupon, on Oct. 7, 1861, Cucullu filed an amended petition, in which he averred that, "by the decision of the Supreme Court rendered in this case, the holders of the mortgage notes and claims, the payment of which petitioner sought to enforce in his original petition, were necessary parties to the suit;" the amended petition, therefore, prayed that Villavaso be made a party, and judgment rendered as prayed for in the original petition.

Villavaso, having been cited, filed an answer to the amended petition on Feb. 7, 1862, in which he averred that Cucullu had no cause of action against him, because he being the holder and owner of the two notes of Cucullu for $10,000 each, secured by the mortgages of Cucullu to enforce their payment, had already issued executory process against Walker on his contract to pay these notes. After the filing of this answer nothing was done in the suit, and it is still pending.

On Oct. 21, 1861, a petition was filed in the District Court of St. Bernard Parish by Villavaso against Walker to foreclose the mortgages given by Cucullu to him on the Myrtle Grove Plantation to secure the two notes made by Cucullu for $10,000 each. This suit was a writ of seizure and sale taken out against Walker, who was Cucullu's vendee, and who was, at the time the writ was issued, in possession of the plantation. The writ bore date Nov. 21, 1861.

In this suit Hernandez, on Oct. 1, 1874, intervened and filed his petition, averring that he was the owner of certain of the

notes made by Walker to Cucullu, and secured by mortgage on the Myrtle Grove Plantation, and claiming that the Walker mortgage had precedence of those from Cucullu to Villavaso, because the latter had not been reinscribed within ten years, and praying an injunction against the sale of the plantation under the writ of seizure and sale, which had been issued upon the mortgages given by Cucullu to Villavaso. The injunction was allowed. Before this suit was finally terminated, Villavaso sold out to one James E. Zunts his interest therein, and all his title to the notes executed by Cucullu, and to the mortgages on the Myrtle Grove Plantation given to secure them, and Zunts was substituted as plaintiff in the suit.

The court declared Hernandez, by reason of his ownership of the Walker notes, to be a first-mortgage creditor on the Myrtle Grove Plantation. Zunts, the vendee of Villavaso, alone appealed from this judgment. It was affirmed by the Supreme Court in May, 1876, on the ground that Villavaso had not preserved the priority of his mortgages as against Hernandez, who was declared to be a third person, by proper reinscription, and therefore Hernandez, representing a part of the second mortgage, had priority over the first.

On Aug. 7, 1875, the mortgaged property had been sold by the sheriff, and adjudicated to Zunts for $10,000. He paid no part of the purchase-money, because he claimed the right, as first mortgagee, to retain the entire price as in part payment of his mortgages.

After the decision in favor of Hernandez, just mentioned, Zunts, by notarial act dated July 7, 1877, sold and transferred to Hernandez "all his right, title, interest, claim, and demand, of whatsoever nature or kind, in and to Myrtle Grove Plantation."

Hernandez having thus, as he claimed, acquired all the rights of Zunts in the suit, took a rule to compel the sheriff of St. Bernard Parish to execute a deed to him for the Myrtle Grove Plantation on payment of $10,000, the price at which it was struck off to Zunts at the sale made on Aug. 7, 1875. This rule was made absolute July 7, 1877.

On Nov. 23, 1877, the bill in this case was filed by Cucullu. He claimed to be the owner of five of the notes made by Walker

for the purchase-money of the Myrtle Grove Plantation. He averred that the plantation was the property of the succession of Walker, the mortgagor, but that it was claimed by Hernandez and various other persons, each of whom asserted title to four of the Walker notes, which he, the complainant, claimed as his property, and to collect which he had brought the suit to foreclose.

On March 23, 1879, the Circuit Court made a decree in the case, by which it was declared that the title to the Myrtle Grove Plantation was in the succession of Walker; that Cucullu was the holder and owner of the unpaid notes made by Walker and secured by his mortgage on said plantation, being the same mentioned in the bill of complaint, amounting to the sum of $57,000, with interest, as claimed in the bill, and that the same continued to be a lien upon said plantation; that Hernandez, by purchase from Zunts, the vendee of Villavaso, was the owner of the two notes for $10,000 made by Cucullu and secured by mortgages on said plantation before its sale by Cucullu to Walker. The decree directed the sale of the plantation and the application of the proceeds, first, to the payment of the Cucullu notes held by Hernandez, and the surplus, if any, to the payment of the Walker notes held by complainant; the effect of the decree being to give priority to the notes and mortgages executed by Cucullu.

The complainant Cucullu alone appealed from this decree. This fact eliminates from the case many controversies decided by the Circuit Court, and the evidence applicable thereto, and leaves only for decision by this court these questions: Whether the Villavaso notes and mortgages were subsisting obligations; whether Hernandez was their owner; and whether, as such owner, he was entitled to priority of payment over the unpaid Walker notes and the mortgage by which they were secured, and of which Cucullu was decreed to be the owner.

The complainant insists, *firstly*, that Hernandez is not the owner of the Villavaso notes; that the act of transfer by Zunts to Hernandez, dated July 7, 1877, conveyed only the rights of Zunts as purchaser of the plantation at the sheriff's sale, made on Aug. 7, 1875; and to support this view the complainant

refers to the affidavit of Zunts, filed by him in the Circuit Court in support of a petition for rehearing in this case. In this affidavit Zunts declares that by said act he did not transfer to Hernandez the Cucullu notes, but only his rights as purchaser of the Myrtle Grove Plantation under the sale of Aug. 7, 1875.

This affidavit cannot be considered in evidence, for two reasons: first, because the transfer by Zunts to Hernandez being in writing must speak for itself, and the purpose of Zunts in executing the transfer must be derived from it, and not from his subsequent declarations; and, second, even if the evidence were competent, it should have been presented in the form of a deposition regularly taken, according to the equity rules by which the witnesses might have been subjected to cross-examination. The affidavit, being purely *ex parte*, cannot be considered on the final hearing.

Looking at the act of transfer from Zunts to Hernandez, we think that by a fair construction it conveys the Cucullu notes and mortgages. It purports to transfer to Hernandez "all the right, title, interest, claim, and demand, of whatsoever nature or kind," of Zunts in and to the Myrtle Grove Plantation. These terms clearly include a conveyance of the rights of Zunts as mortgagee of the plantation.

But if the transfer had specifically and in terms conveyed to Hernandez the rights of Zunts as purchaser under the sale of Aug. 7, 1875, and nothing more, we think it would have carried with it the notes and mortgages under which the sale was made. By virtue of the transfer the vendee would have the right to use them to pay his bid. This clearly implies title to the notes, and the mortgages by which they were secured. The fact that the sale was not effectual to convey the title did not divest Hernandez of his claim to the notes and mortgages, and reinvest them in Zunts. It is a question between Zunts and Hernandez. Zunts sold to Hernandez his rights as adjudicatee, and all other title and claim which he held to the Myrtle Grove Plantation; he received his pay for the transfer; he has no rights left, either as a purchaser or a mortgagee, and whatever interest he had in either character is vested in Hernandez by the act of transfer.

But a conclusive answer to complainant's claim, that the ownership of the Cucullu notes and mortgages was not transferred to Hernandez by Zunts, is found in the bill of complaint, which is framed on the assumption of such ownership by Hernandez. The bill avers that "said James E. Zunts, by public act, in the city of New Orleans, on the 16th of April, 1877, did sell and transfer unto said Joseph Hernandez all his pretended right, title, and interest in and to said Myrtle Grove Plantation, and all his pretended rights in and to the said suit of E. Villavaso, James E. Zunts subrogated, *versus* Augustus W. Walker, No. 413 of the docket of the Second Judicial District Court of the Parish of St. Bernard, and all his pretended right in and to the notes sued on, and the pretended privileges and rights of mortgage thereunto attached, whatever they might be; and the said Joseph Hernandez, in consequence of said transfer and sale by James E. Zunts, now claims and pretends to be the owner of said property hereinbefore fully described."

After such an averment in the bill of the purpose and effect of the act of transfer between Zunts and Hernandez, it does not lie in the mouth of Cucullu to say that the act did not convey to Hernandez the title to the Cucullu notes and mortgages. The effect of the act of transfer is not put in issue. What Hernandez claims to be its legal import is admitted by the bill, and that is the end of the controversy upon the point. We think, therefore, that the title of Hernandez to the Cucullu notes and mortgages must be considered as settled.

Secondly, It is insisted, however, by complainant, that even should the title of Hernandez to these notes and mortgages be conceded, nevertheless it can avail him nothing, because the notes are prescribed.

Article 3540 (3505) of the Civil Code of Louisiana declares: "Actions on bills of exchange, notes payable to order or bearer, except bank-notes, those on all effects negotiable or transferable by indorsement or delivery, and those on all promissory notes, whether negotiable or otherwise, are prescribed by five years, reckoning from the day when the engagements were payable." By article 3551 (3516) of the same code, prescription may be interrupted in the two modes laid down in article

3516 (3482); viz., first, by a natural interruption, as when the debtor makes acknowledgment of the debt, or, second, by the institution of a suit against the debtor.

One of the Cucullu notes fell due Feb. 1, 1851, and the other Feb. 4, 1854. By his act of sale of the Myrtle Grove Plantation to Walker on Sept. 27, 1857, Cucullu declared that these notes had been renewed and would fall due Feb. 4, 1858.

The complainant claims that this was the last natural interruption of the prescription on the notes by Cucullu, and that as no suit has ever been instituted against him on the notes by any person, or any demand made upon him for their payment, the notes are prescribed.

By the act of sale from Cucullu to Walker of the Myrtle Grove Plantation, under date of Sept. 28, 1857, Cucullu acknowledged the notes given by him to Villavaso to be valid debts, and specified the time when they would fall due. Walker agreed to pay the Cucullu notes in the place and stead of the latter, and such payment was to be in part payment of the purchase price of the plantation.

Walker made payments of interest on these notes from 1858 up to Feb. 4, 1861. It is the settled law of Louisiana that payments made by a purchaser of property who assumes as part of the price a debt due by his vendor, is an interruption of prescription as to that debt, both as to the purchaser and vendor. *Cockfield* v. *Farley*, 21 La. Ann. 521; *Collier* v. *His Creditors*, 12 Rob. (La.) 398. So that prescription on the Cucullu notes was interrupted as late as Feb. 4, 1861.

But on Feb. 2, 1860, Cucullu, as we have seen, instituted suit against Walker, to enforce the latter's contract included in the act of sale to him of the Myrtle Grove Plantation, to compel him to pay the Cucullu notes. To this suit Walker appeared and made various defences, and the case has been pending from that time until now, and still remains undisposed of. In our opinion this suit is a natural interruption of the prescription, for it is an acknowledgment by Cucullu, in the most explicit form, that the notes are unpaid and of his liability to pay them. It is an acknowledgment that continues from day to day as long as the suit remains pending, so that it is not merely an interruption but is a suspension of the prescription.

Furguson v. *Glaze*, 12 La. Ann. 667; *Barrow* v. *Shields*, 13 id. 57.

The claim, therefore, that the Cucullu notes are prescribed will not hold.

Thirdly, It is next insisted by complainant that the mortgages given by him to Villavaso, not having been reinscribed, as required by the Code of Louisiana, within every period of ten years after their date, have become prescribed, and have lost their lien upon the property described in them.

It is clear from the decisions of the Supreme Court of Louisiana that this result follows only as to third persons, and not as to the parties to the mortgage. A mortgage to affect third persons must be inscribed in the mortgage office, and to preserve its original rank as to them, it must be reinscribed before the expiration of ten years from the original inscription. The policy of the law is to make an investigation of liens easy and simple, and therefore, except for legal mortgages in favor of minors and married women, no search for mortgages in the mortgage office is required for a greater period than ten years prior to the date of search.

But this applies to third persons only, and not to the mortgagor or his heirs.

"By the words 'third persons' are to be understood all persons who are not parties to the act or to the judgment on which the mortgage is founded." Civil Code art. 3343.

"Consequently neither the contracting parties nor their heirs, nor those who were witnesses to the act by which the mortgage was stipulated, can take advantage of the non-inscription of the mortgage." Civil Code, art. 3344.

By the omission to reinscribe a mortgage within ten years from the date of the first inscription, the effect of the inscription and not of the mortgage itself ceases. The mortgage remains unimpaired as between the mortgagor and his heirs, and the mortgagee.

The general doctrine as stated has been repeatedly declared by the Supreme Court of Louisiana. *Bonin* v. *Durand*, 2 La. Ann. 776; *Haines* v. *Verret*, 11 id. 122; *Seyburn* v. *Deyris*, 25 id. 483.

The rule was applied to a witness to the mortgage in the case of *Brown* v. *Sadler*, 16 id. 206.

From these provisions of the Code of Louisiana and the decisions of the Supreme Court of the State it is clear that no inscription of the Villavaso mortgages was necessary to affect Cucullu. He being the mortgagor, they remained valid as against him, without inscription or reinscription, and preserved their rank over a subsequent mortgage in which he was the mortgagee.

It is claimed, however, by complainant, that although the doctrine may apply to the original inscription it does not apply to the reinscription of a mortgage; that unless reinscribed within ten years from its date the mortgage becomes prescribed and ineffectual to bind even the mortgagor.

This claim does not seem to us to be founded in reason or to be sustained by any decisions of the Supreme Court of Louisiana. On the contrary, that court, as will be seen by the cases above cited, makes no distinction, so far as this question is concerned, between the original inscription and subsequent reinscriptions.

We think, therefore, that neither the lien of the mortgages executed by Cucullu nor their priority as against the subsequent mortgage executed to him by Walker has been lost.

The complainant claims, *fourthly*, that Hernandez is estopped from setting up the mortgages from Cucullu to Villavaso as superior to the mortgage from Walker to Cucullu, because, in his intervention in the case of *Villavaso, Zunts substituted*, v. *Walker*, he had claimed that the mortgages from Cucullu to Villavaso had lost their lien for want of reinscription, and the complainant asserts that this claim was sustained in that case by the Supreme Court of Louisiana.

An examination of the petition of Hernandez in that case, and the decision of the Supreme Court, shows that the question of precedence between the mortgages was raised on a different state of facts from that on which the question arises here.

Hernandez, in the suit of *Villavaso* v. *Walker*, in which Cucullu was not a party and did not in any way appear, claimed that the mortgages from Cucullu to Villavaso had, for want of reinscription, lost their rank as against him, he being the owner

of the mortgage from Walker to Cucullu. The Supreme Court of Louisiana sustained this view, and put its decision expressly on the ground that Hernandez was a third person in the acts of mortgage given by Cucullu to Villavaso, which had not been reinscribed.

In the present suit Cucullu is a party, and is insisting that the mortgages given by himself to Villavaso have lost their lien for want of reinscription, and that the mortgage given to him by Walker should have priority.

The question whether the Walker mortgage, in the hands of Hernandez as owner, is entitled to priority over the Cucullu mortgages when held by Villavaso, because the latter had not been reinscribed, is very different from the question whether Cucullu, when claiming to be the owner of the Walker mortgage, can assert priority over the mortgages executed by himself to Villavaso, because the latter had not been reinscribed.

In his intervention Hernandez claimed priority for the Walker mortgage as against Villavaso, holder of the Cucullu mortgages, because, as to the latter, he was a third person and the mortgages had not been reinscribed. In this case it is Cucullu who claims priority for the Walker mortgage, which, he says, he owns, against his own mortgages to Villavaso, for want of the reinscription of the latter. But as to the mortgages made by himself, he is a party and not a third person, and as to him no reinscription is necessary.

The position of Hernandez in his petition in the case of *Villavaso* v. *Walker* is not inconsistent with his claim here, and his claim in this case has not been decided against him by the Supreme Court of Louisiana in the case referred to. See *Villavaso* v. *Walker*, 28 La. Ann. 712.

Fifthly, The complainant claims that the notes given by Cucullu to Villavaso were novated, and that Cucullu was released by the extension of the time for their payment, granted to Walker by Villavaso, by the act of Feb. 4, 1858.

This claim is based on article 3063 of the Civil Code, which declares: "The prolongation of the time granted to the principal debtor, without the consent of the surety, operates a discharge of the latter."

To make this article applicable, it must appear that by the

act of Feb. 4, 1858, by which Walker agreed with Cucullu to pay the notes executed by the latter to Villavaso, Walker became the principal debtor, and Cucullu the surety.

It cannot, we think, be reasonably claimed that a debtor is converted into a surety by his creditor's acceptance of an additional promise from a third person to pay the debt due him by his debtor. There is no element of suretyship in such a contract, unless it be that the additional debtor might be regarded as surety for the original debtor. The relation between the creditor and the original debtor is not changed by such an arrangement.

It is, however, a sufficient answer to this claim to say that the bill of complaint contains no allegation in reference to the extension of the time of payment granted by Villavaso to Walker, and no claim that Cucullu was discharged thereby, and no allusion is made to the subject in any part of the pleadings. The claim that, by the contract of Walker with Cucullu to pay his notes to Villavaso, Walker became the principal debtor and Cucullu the surety, and that, by the indulgence given by Villavaso to Walker, Cucullu, as such surety, was discharged, appears in the case for the first time in the brief of complainant's counsel.

The evidence to show the facts on which this claim is based cannot be regarded, for there is no averment in the bill to which it can be applied. It is not pertinent to any issue in the case. *Whitely* v. *Martin*, 3 Beav. 226; *Smith* v. *Clarke*, 12 Ves. Jr. 477; *Langdon* v. *Goddard*, 2 Story, 267; *Gordon* v. *Gordon*, 3 Swans. 400.

Lastly, It is averred by complainant that the purchase made by Hernandez from Zunts, of the notes and mortgages given by Cucullu to Villavaso, was the purchase of a litigious right; and even if the notes and mortgages are valid claims, no more can be recovered by Hernandez than he paid to Zunts, and this sum complainant avers to be $2,100.

This claim is based on article 2652 of the Civil Code of Louisiana, which declares: "He against whom a litigious right has been transferred, may get himself released by paying to the transferee the real price of the transfer, together with the interest from date."

The next article, 2653, defines what is a litigious right, as follows: "A right is said to be litigious whenever there exists a suit or a contestation on the same."

This claim cannot be sustained, for two reasons: *First*, Hernandez did not purchase the Villavaso notes until after the judgment in the Supreme Court thereon. The right ceases to be litigious when judgment has been rendered. *Marshal* v. *McCrea*, 2 La. Ann. 79. *Secondly*, it has been repeatedly decided by the Supreme Court of Louisiana that the purpose of article 2652 was to prevent litigation, and therefore a defendant who, instead of paying the price of the transfer, contests the suit and prolongs the litigation, defeats the very object of the article, and cannot exercise the privilege it gives. The complainant should have paid or tendered to Hernandez the real price of the transfer with interest from date. He would then have been in a position to claim the benefit of article 2652. He cannot, after contesting the claim inch by inch and up to the court of last resort, cancel it by paying what it cost his adversary. *Leftwich* v. *Brown*, 4 id. 104; *Pearson* v. *Grice*, 6 id. 233; *Rhodes* v. *Hooper*, id. 356; *Evans* v. *De L'Isle*, 24 id. 248.

We think that the attempt of Cucullu to get rid of the notes and mortgages given by him to Villavaso, or postpone them to the subsequent notes and mortgage given to himself by Walker, must fail, and ought in equity to fail. Thirty years ago he borrowed from Villavaso $20,000, and to secure this money executed mortgages to him on the Myrtle Grove Plantation which he then owned. He has never paid that debt. He afterwards sold the plantation to Walker and took his notes for part of the purchase-money, and for the residue his stipulation to pay the Villavaso notes and mortgages. Walker has not paid them. While enforcing the lien of the Walker mortgage and bringing the property to sale to satisfy it, equity requires that out of the proceeds the notes of Cucullu to Villavaso should be first paid, unless some reason in law exists by which they are postponed. We have been able to find no such reason. We think the decree of the Circuit Court was right, and that it should be affirmed; and it is

So ordered.

RAILROAD COMPANIES v. SCHUTTE.

130-367
137-781
v. 753

103 118
L.ed 327
451 758

FLORIDA CENTRAL RAILROAD COMPANY v. SCHUTTE; JACKSONVILLE, PENSACOLA, AND MOBILE RAILROAD COMPANY v. SCHUTTE; WESTERN NORTH CAROLINA RAILROAD COMPANY v. DREW.

1. The circumstances stated under which bonds of Florida, payable to bearer, issued in aid of certain railroad companies, signed by her governor and her treasurer, and sealed with her seal, were sold by the active efforts of the governor and came into the hands of subjects of Holland. Most of the sales were in that country. *Held*, that inasmuch as the bonds, though fraudulent in their inception, were put upon the market and sold in a foreign country to a people largely unacquainted with the English language, a case is presented which justifies the court in treating the owners of them as purchasers for value and in good faith, and entitled to relief accordingly.

2. One S., having money in his hands belonging to a corporation, W., fraudulently diverted it from the use to which the company had appropriated it, and purchased therewith bonds of the P. & G. and of the T. railroads. S. subsequently handed over the bonds to D. and others, purchasers of the railroads from the trustees of the State internal improvement fund, that D and his associates might use them in payment, it being the understanding that they were to raise money by mortgage and pay S. what he had advanced on the bonds, with commissions and fees in addition; and S., besides taking stock in the new company to be formed, was to have certain privileges in the election of directors. D. and his associates not being able to raise the balance of the purchase-money remaining after applying the bonds, S., by giving to the trustees a fraudulent check, got possession of the title-deeds, and caused them to be recorded. Thereupon D., for himself and his associates, executed a paper, purporting to convey the railroads to S., "in trust for the express purpose of enabling said S. — which he hereby agrees and binds himself to do — to convey the same to that incorporation, consisting or to consist as incorporators of said D. and his associates," as soon as the latter should be incorporated as a railroad company by the legislature. The legislature incorporated D. and his associates, and the company at once, without objection from S. or any one in his interest, took possession of the property and operated the railroad as owner. One L., who had succeeded to S. under his contracts, assumed control of the company, and was its principal stockholder. A new railroad company was then incorporated, which absorbed the other and took possession of its property. Both S. and L. were named as incorporators of the new company. The corporation W., whose funds S. had thus embezzled and invested, averred in its bill that the ownership of the property was in it. Through its agents it had also entered into a contract of settlement with S. and L., stipulating that the money it had lost should be paid to it from the proceeds of the

sales of certain State bonds to be issued to the railroad company on the faith of the ownership of this property. *Held*, that the corporation W. was estopped from setting up title to the property as against *bona fide* holders of the bonds.

3. The legislation under which certain bonds were issued by the State of Florida in aid of railroads having been pronounced unconstitutional by the Supreme Court of that State, this court passes upon the liability of the railroad company as guarantors of such bonds, — the case upon the facts being within the rule of the liability of an indorser of commercial paper.
4. Contracts created by, or entered into under, the authority of statutes are to be interpreted according to the language used in each particular case to express the obligation assumed.
5. The State, by the terms of the statute, having a lien on the property of the railroad company as trustee for the holders of the bonds, it does not follow, because the provisions of the statute in respect to the execution and exchange of the State bonds is unconstitutional, that the statutory lien is void also. The unconstitutional part of the statute may in this instance be stricken out, and the statutory mortgage left in full force.
6. A suit was brought by the State of Florida against the F. C. Railroad Company, alleging default in the payment of interest due on the company's bonds given in exchange for State bonds, and seeking to enforce the statutory lien by the sale of the roads and the application of the proceeds to the holders of the State bonds. The company answered, setting up fraud, the unconstitutionality of the law touching the State bonds, and averring that the railroad bonds were not a lien. The Supreme Court of the State dismissed the bill because it was not proved that any of the State bonds were in the hands of *bona fide* holders. The point as to the statutory authority, however, to exchange the bonds and create a lien, was directly made by the pleadings, and, after full argument, elaborately considered by the court. *Held*, that the decision on this point was in no just sense *obiter*.
7. It cannot be said that a case is not authority on one point, because, although that point was properly presented and decided in the regular course of the consideration of the cause, something else was found in the end which disposed of the whole matter.

APPEALS from the Circuit Court of the United States for the Northern District of Florida.

The facts are stated in the opinion of the court.

Mr. George F. Edmunds, *Mr. William A. Maury*, *Mr. Samuel F. Phillips*, and *Mr. James M. Baker* for the Florida Central Railroad Company.

Mr. James M. Baker and *Mr. James Baker* for the Jacksonville, Pensacola, and Mobile Railroad Company.

Mr. George F. Edmunds, *Mr. Samuel F. Phillips*, and *Mr. Joseph B. Stewart* for the Western North Carolina Railroad Company.

Mr. Matthew H. Carpenter and *Mr. Wayne MacVeagh*, *contra.*

MR. CHIEF JUSTICE WAITE delivered the opinion of the court.

These cases, although separate in form, are so connected in their facts that they may properly be considered and decided together. The facts are these: —

The Florida, Atlantic, and Gulf Central Railroad Company, incorporated by the General Assembly of Florida in 1853, built a railroad from Jacksonville to Lake City. The Pensacola and Georgia Railroad Company, also incorporated during the same year, built a road from Lake City through Tallahassee to Quincy in the direction of Mobile, with a branch to Monticello; and the Tallahassee Railroad Company, incorporated at a somewhat earlier date, built another road from Tallahassee to St. Marks. Each of these companies became indebted to the State of Florida under the provisions of the internal improvement law, and, as a consequence, the road of the Florida, Atlantic, and Gulf Central company was sold, on the 4th of March, 1868, by the trustees of the internal improvement fund, under the authority of law, to William E. Jackson and his associates, that of the Pensacola and Georgia company, on the 6th of February, 1869, to F. Dibble and his associates, and that of the Tallahassee company on the same day and to the same parties.

The road from Jacksonville to Lake City was paid for in full, and a conveyance in due form executed to the purchasers, who, on the 29th of July, 1868, were, under the name of the Florida Central Railroad Company, incorporated by the General Assembly of the State, with all the powers and franchises of the Florida, Atlantic, and Gulf Central company. They were also authorized to fix the amount of the capital stock of the company, and the number of shares into which it should be divided. In this way the capital was put at $550,000, with five thousand five hundred shares. Of these shares George W. Swepson afterwards became the purchaser of four thousand three hundred and seventy, which he paid for with money in his hands belonging to the Western Division of the Western North Carolina Railroad Company, a North Carolina corporation, which he fraudulently diverted from the use to which it had been appropriated by that company.

Swepson also purchased, with the funds of the same North Carolina corporation, bonds of the Pensacola and Georgia and the Tallahassee companies to the amount of $960,000, or thereabouts, and on the 24th of April, 1869, he entered into a contract with the purchasers of the roads of those companies by which he was to deliver them these bonds to use in making their payments of purchase-money; and they, as soon as they could get the necessary authority from the legislature, were to raise money by a mortgage on the property and pay him what he had advanced to buy the bonds, with certain commissions and attorney's fees, and $100,000 in addition. The contract contemplated an incorporation of the purchasers after the manner of the Florida Central company, with a distribution of one-third of the stock to Swepson. As security for the payment of the sum agreed to be paid, the bonds issued under the contemplated mortgage were to be disposed of in a particular way, and Swepson was to be given certain privileges in the election of directors. Under this arrangement Swepson handed over $960,300 of Pensacola and Georgia and Tallahassee bonds to the purchasers; but after these bonds had been applied in the way contemplated there still remained a balance of the purchase-money, amounting to $472,065, to be paid. Deeds conveying the property to Dibble for himself and his associates were executed in due form, but their delivery was withheld on account of this default in payment. Dibble and his associates being unable to raise the money, Swepson, by putting off on the trustees of the improvement fund a worthless check that was never paid for the amount that was due, got possession of the deeds and had them duly recorded April 22, 1869. On the same day Dibble, for himself and his associates, party of the first part, executed a paper which on its face purported to convey the roads to Swepson, "said party of the second part, in trust for the express purpose of enabling said party of the second part — which he hereby agrees and binds himself to do — to convey the same to that incorporation, consisting or to consist as incorporators of said F. Dibble and his associates, as soon as said Dibble and his associates shall have granted to them such a similar relief as the legislature of the said State of Florida granted to William E. Jackson and his associates by act

for relief of William E. Jackson and his associates, approved July 29, 1868, and also for the further purpose of securing said party of the second part in all advances made as specified and agreed upon in the said agreement between these parties, executed and dated March 26, 1869, and the advancement, as aforesaid, of said sum of four hundred and seventy-two thousand and sixty-five dollars, until such time as said relief shall have been granted and said party of the second part shall have conveyed said property to said incorporation, as hereinbefore prescribed."

This instrument was never acknowledged or recorded.

On the 24th of June, 1869, the proposed act of incorporation was obtained, by which Dibble and his associates, as purchasers of the roads, were made a body corporate under the name of the Tallahassee Railroad Company, to hold, operate, and enjoy the property purchased, with all the powers, privileges, and franchises of the Pensacola and Georgia and the original Tallahassee companies, and with power to issue bonds secured by mortgage; "*Provided*, that any deed of trust, mortgage, or conveyance, bond or bonds, or security which may have been executed, made, created, or contracted for, as a lien on said railroad or otherwise, by said Franklin Dibble, in behalf of himself and his associates, prior to the passage of this act, shall be valid and effectual to all intents, either at law or in equity, as a lien or a mortgage, or security on said railroad, as if the same had been made by virtue of this act, and shall in nowise be affected by any provisions thereof." Sect. 6.

The new Tallahassee company was duly organized under this charter, and took possession of and operated the roads. Afterwards, to remove all doubts as to the title of the corporation to the property of the old companies, Dibble, for himself and his associates, at some time during the year 1870, executed a paper which purported to be a conveyance, in due form, for that purpose, by which he professed to relinquish and quitclaim to the corporation all his rights. This paper was not acknowledged, and was not in fact a legal conveyance of the property. No conveyance in form was ever executed by Swepson, neither has he at any time, so far as appears, attempted to exercise any rights under the conveyance or transfer which was made to him.

On the 24th of June, 1869, an act was passed by the General Assembly of Florida to "perfect the public works of the State." By this act, "in order to secure the speedy completion, equipment, and maintenance of a connection by railroad between Jacksonville, on the Atlantic coast, and Pensacola, on the Gulf coast, and Mobile, in Alabama," George W. Swepson, Milton S. Littlefield, J. P. Sanderson, J. L. Re Qua, William H. Hunt, their associates, successors, and assigns, were constituted a body politic and corporate under the name of the Jacksonville, Pensacola, and Mobile Railroad Company. This company was authorized to build a railroad from Quincy to the Alabama State line, and there connect with any road running to Mobile, and to consolidate with the several companies owning roads from Quincy to Jacksonville, from Tallahassee to St. Marks, and the branch to Monticello. The original charter was somewhat amended on the 28th of January, 1870, after which sects. 9, 10, 11 of the original charter, and sect. 4 of the amended charter, were as follows: —

"SECT. 9. In order to aid the said Jacksonville, Pensacola, and Mobile Railroad Company to complete, equip, and maintain its road, and to aid in perfecting one of the public works embraced in the internal improvements of the State, the governor of the State is hereby directed to deliver to the president of the said company coupon bonds of the State to an amount equal to sixteen thousand dollars per mile for the whole line of road and length of railroad owned by or belonging to said Jacksonville, Pensacola, and Mobile Railroad Company, in exchange for first-mortgage bonds of said railroad company, of the denomination of one thousand dollars, when the president thereof shall certify upon his oath that the road or parts of road for which he asks for an exchange of bonds is completed, and is in good running order. The said bonds shall be of the denomination of one thousand dollars, signed by the governor, countersigned by the treasurer, sealed with the great seal of the State; shall bear eight per cent interest, payable semi-annually, and shall be payable to bearer. They shall be dated on the first day of January, A. D. 1870, and shall be due thirty years thereafter, and principal and interest shall be payable at such place in the city of New York as the governor shall designate. The coupons for interest shall be payable to bearer, and shall be authenticated by the written or engraved signature of the treasurer: *Provided*,

however, that when the Jacksonville, Pensacola, and Mobile Railroad Company shall or may determine to pay the interest in gold for or upon their bonds or the bonds designated in the tenth section of an act entitled 'An Act to perfect the public works of the State,' approved June 24, 1869, upon giving notice to the governor of such intention, then the State bonds aforesaid and the coupons for interest on said bonds shall be payable in gold, notice of which shall be given by the governor in some paper published in the city of New York, and at the capital of this State, to be designated by the governor.

"SECT. 10. In exchange for the bonds of the State above described, the president of the company shall deliver to the governor of the State coupon bonds of the company, bearing a like rate of interest, payable to the State of Florida, signed by the president, sealed with the corporate seal; coupons payable to State of Florida, authenticated by the written or engraved signature of the president. The bonds shall be of such denominations, not less than one thousand dollars, as the said company may choose, and principal and interest shall be payable at the same time and place as the aforesaid State bonds.

"SECT. 11. To secure the principal and interest of the said company bonds, the State of Florida shall, by this act, have a statutory lien, which shall be valid to all intents and purposes as a first mortgage duly registered, on the part of the road for which the State bonds were delivered, and on all the property of the company, real and personal, appertaining to that part of the line which it may now have or may hereafter acquire, together with all the rights, franchises, and powers thereto belonging, and in case of a failure of the company to pay either principal or interest of its bonds or any part thereof for twelve months after the same shall become due, it shall be lawful for the governor to enter upon and take possession of said property and franchises, and sell the same at public auction, after having first given ninety days' notice by public advertisement in at least one newspaper published in each of the following places: the city of New York, in the State of New York, the city of Savannah, in the State of Georgia, and the city of Tallahassee, in the State of Florida, for lawful money of the United States, and for nothing else, except that the State, for its own protection, may become the purchaser at said sale, and may pay on said purchase any evidences of indebtedness the State may hold against said roads, which purchase-money or said evidences of indebtedness shall be paid on the day of sale into the treasury of

this State, or within ten days thereafter; and all moneys arising from said sale and paid into the treasury of this State, as heretofore prescribed, shall be promptly and exclusively applied to the payment and satisfaction of the bonds issued by the State of Florida, under this act, and in case the holders of said bonds do not present them for redemption within ninety days after said sale, the treasurer shall invest the same, or any part thereof which may be remaining in his hands, in the securities of the United States, to be held by the State of Florida, as trustee for the bondholders, until said bondholders shall demand the same, upon which demand the treasurer shall immediately turn over or pay said securities to the bondholders. The purchaser or purchasers of said road shall be by said sale possessed of all the rights, privileges, and franchises of said defaulting company, together with the franchise of use and being a body politic, and the governor shall, upon the payment of said purchase-money into the treasury of this State, as above provided, immediately cause the purchaser or purchasers of said road at said sale to be placed in the actual possession, use, and enjoyment thereof, and cause all the books, papers, and real and personal property of said company, of every description, together with its franchise of use and being a body politic and corporate, to be turned over to said purchaser or purchasers, and the purchaser or purchasers of said road shall be by said sale possessed of all the rights, privileges, and franchises of said defaulting company, together with the franchise of use and being a body politic and corporate, and may use any new corporate name they see fit, and make and use a new seal upon signifying their action in writing to the governor, and thereafter may exercise all the rights of a body corporate and privileges thereof, and of said defaulting company, under said new name, for the term of thirty-five years, to date from the time of purchase as aforesaid. That any such sale shall be ratified by the legislature before the same shall become effective."

"SECT. 4. That the governor shall, for the purpose of further aiding said Jacksonville, Pensacola, and Mobile Railroad Company in the speedy construction of its road, deliver to the president of said company coupon bonds of this State, of the same character as those above described in this act, to the amount of sixteen thousand dollars per mile, upon receiving for and from the president of said company first-mortgage bonds of like amount on any part or portion of the road between Quincy and Jacksonville: *Provided, however*, the State bonds under this section shall not be exchanged for first-mortgage bonds for a greater length than one hundred miles

of any part of railroad between Quincy and Jacksonville: *Provided*, the said railroad company or companies shall not issue first mortgage bonds to a greater amount than sixteen thousand dollars per mile."

Under the authority of this act the new Tallahassee company was consolidated with the Jacksonville, Pensacola, and Mobile company, May 25, 1870, by the name and having the corporate powers of the Jacksonville, Pensacola, and Mobile Railroad Company, with a capital of $6,000,000, divided into 60,000 shares. Previous to this time M. S. Littlefield had succeeded to all the rights of Swepson in these several transactions, and in the distribution of stock in the consolidated company he was given 38,433 shares of the agreed capital. He represented 9,930 out of the 10,000 shares at the meeting of the stockholders of the Jacksonville, Pensacola, and Mobile company which voted for the consolidation, and 17,998 of the 30,000 shares of the Tallahassee company voting to the same effect. The Florida Central company never entered into the consolidation, and the consolidated company, therefore, only became the owner of the roads west of Lake City.

After the consolidation was perfected the Jacksonville, Pensacola, and Mobile company executed its bonds, payable to the State for $3,000,000, as allowed by sect. 10 of its charter, and received in exchange bonds of the State for the same amount, such as were provided for in sect. 9, and in the following form: —

"UNITED STATES OF AMERICA.

"No. .] *State of Florida.* [No.

"It is hereby certified that the State of Florida justly owes to or bearer, one thousand dollars, redeemable in gold coin of the United States, at the Florida State agency, in the city of New York, on the first day of January, 1900, with interest thereon at the rate of eight per centum per annum, payable half-yearly at the said Florida State agency, in gold, on the first days of July and January in each year, from the date of this bond and until the principal be paid, on surrendering the proper coupons hereto annexed.

"Tallahassee, January 1st, 1870. HARRISON REED, *Governor.*

"[FLORIDA GREAT SEAL.] S. B. CONNER, *Treasurer.*

"Issued in accordance with act of the legislature of Florida, approved January 28th, 1870.

"*Form of Coupon.*

"The State of Florida will pay to bearer forty dollars in gold, at the State agency, in the city of New York, for interest due , on bond for $1,000.

"No. . S. B. CONNER, *Treasurer.*

"*Indorsement.*

"STATE OF FLORIDA.

"No. .] THIRTY-YEAR EIGHT PER CENT BOND. [$1,000.

"Payable January 1st, 1900. Interest payable 1st July and January, in gold, at Florida State agency, in the city of New York.

"This bond is one of a series issued in aid of the Jacksonville, Pensacola, and Mobile Railroad Company, to the extent of $16,000 per mile upon completed road. The State of Florida holding the first-mortgage bonds of said railroad company for a like amount, as further security to the holder hereof.

"HARRISON REED, *Governor of Florida.*"

These bonds of the State, thus indorsed, were put in the hands of Littlefield, the president of the company, to be disposed of, and he, under an arrangement previously made with S. W. Hopkins & Co., of New York and London, handed the bonds over to them for sale.

Some time in the spring of 1870 Littlefield, who was at the time president of the Jacksonville, Pensacola, and Mobile company, and a director in the Florida Central, caused a million of dollars of the bonds of the last-named company to be printed in New York, and signed there by one H. H. Thompson as treasurer of the company. These bonds were made payable to the State, and purported to be executed under the authority of the act of Jan. 28, 1870, to amend the act of June 24, 1869, "to perfect the public works of the State," and given in exchange for bonds of the State to aid the Jacksonville, Pensacola, and Mobile company. After having been signed by Thompson, they were taken by Littlefield to Washington, where they were signed by Swepson as president of the company. Afterwards the seal of the company was put to them, but undoubt-

edly in an irregular and surreptitious way. It is apparent, also, from the evidence, that when Thompson signed the bonds as treasurer he had not been formally elected to that office by the directors, but at a meeting of the directors, on the 25th of May, Littlefield stated that Swepson, the late president, had appointed Thompson as secretary and treasurer of the company for the past year, and on his motion this action of the president was approved.

On the 30th of May, 1870, an agreement was entered into between Littlefield and one Edward Houstoun, both stockholders of the Florida Central company, by which this million of dollars of bonds was put in the hands of Houstoun as collateral security for a debt from Littlefield to him, and on the 2d of June, at a meeting of the stockholders of the company, the following resolutions were unanimously adopted: —

"*Resolved*, that bonds to the extent of sixteen thousand dollars per mile be issued by this company, which bonds shall be a first lien or mortgage on the Florida Central railroad, its equipments, franchise, road-bed, workshops, and depots, excepting, however, the town-lots in the city of Jacksonville not used for depot purposes.

"And whereas the late president, George W. Swepson, caused to be prepared bonds to be issued by this company preparatory to an order of the board of directors to that effect, and which bonds were signed by said Swepson as president of this company and countersigned by H. H. Thompson, treasurer:

"*Be it therefore resolved*, that the said bonds so signed by said Swepson and countersigned by said Thompson, to the extent of sixteen thousand dollars a mile, be and they are hereby adopted as the bonds to be issued under the foregoing resolution, and that such bonds when so issued shall be a first lien or mortgage on the said Florida Central railroad, its equipment, franchise, road-bed, workshops, and depots (excepting the lots in Jacksonville not used for depot purposes).

"*Be it further resolved*, that said bonds shall be placed in the hands of Edward Houstoun for the purposes agreed upon by an arrangement between himself and Milton S. Littlefield, who is the owner of nearly all the stock in this company, which bonds or their proceeds are to be held and applied according to the terms of said arrangement, except the proportion thereof applicable or apportionable to the stock owned by other parties and upon the satisfac-

tion otherwise of the terms of said arrangement with said Houstoun, the said bonds are to be by him transferred to Milton S. Littlefield, or according to his direction, to the extent of the stock owned by him at the time.

"*Resolved further*, that the directors be directed to carry the foregoing resolutions into effect."

On the 7th of June, after these resolutions were passed, the original agreement between Littlefield and Houstoun was modified so as to provide for a substitution and exchange of the bonds of the State for the bonds of the company, and a sale of the bonds of the State by Hopkins & Co., they to pay from the proceeds certain sums to different parties, and the remainder, if any, to Littlefield. So far as appears nothing was to go to the Jacksonville, Pensacola, and Mobile company.

Afterwards, on the 21st of November, 1870, at a meeting of the directors of the company, a report was received from a committee appointed to take into consideration the past issue of bonds, as follows: —

"The committee finding that the bonds signed by G. W. Swepson, president, and countersigned by H. H. Thompson, treasurer, are in such form as that they cannot be used to carry out the intention of their issue when they were adopted, report the following resolution in respect thereto:

"*Resolved*, that the resolution adopting the bonds to be issued by the company, signed by George W. Swepson, president, and H. H. Thompson, treasurer, at a meeting of the board of directors, held on the 2d of June, A.D. 1870, be and the same is hereby rescinded, and that said bonds be destroyed."

The resolution as reported was unanimously adopted, but the bonds were never destroyed, and Houstoun, on the 11th of January, 1871, delivered them upon certain trusts to Coddington, who exchanged them for State bonds, which he took to New York, and afterwards, on the 18th of April, placed in the hands of Hopkins & Co. in New York for sale. On the 13th of April, 1871, at a meeting of the stockholders of the company, the following resolution was passed: —

"*Resolved*, that Edward Houstoun is authorized to place the bonds referred to in the preamble and resolutions of the stockholders, adopted June 2, 1870, in the hands of S. W. Hopkins &

Co., for the purposes mentioned in said resolutions, subject to the same exceptions therein expressed with respect to the proportion thereof applicable to the stock owned by other parties, and according to the same terms therein mentioned."

These State bonds were in the same form as those exchanged with the Jacksonville, Pensacola, and Mobile company, and they had upon them similar indorsements.

On the 24th of March, 1870, J. L. Henry, N. W. Woodfin, W. P. Welch, W. G. Candler, and W. W. Rollins were appointed by the General Assembly of North Carolina a commission "to examine and fully investigate the condition and affairs of the Western Division North Carolina Railroad Company, as far as it concerns the administration of G. W. Swepson, late president thereof, and to make a full and final settlement of all accounts and liabilities of said president, G. W. Swepson, in connection with said company," and this commission, on the 16th of April, 1870, entered into the following agreement: —

"Memorandum of agreement and settlement between the Florida Central Railroad Company, George W. Swepson, president, and the Jacksonville, Pensacola, and Mobile Railroad Company, Milton S. Littlefield, president, and Milton S. Littlefield, majority owner of the stock of said companies, and also of the stock of the Tallahassee Railroad Company, of the first part, and the Western Division of the Western North Carolina Railroad Company, represented by N. W. Woodfin, W. G. Candler, W. Pink Welch, and W. W. Rollins, commissioners appointed by an act of the legislature of North Carolina, approved by the stockholders of said corporation, of the second part, witnesseth:

"That whereas, George W. Swepson, late president of the Western Division of the Western North Carolina Railroad Company, made certain investments of the funds of said company in securities of and interests in the said Florida Central railroad, Jacksonville, Pensacola, and Mobile railroad, and the Tallahassee railroad, of the said State of Florida, as per report made by the said George W. Swepson to the said commissioners, amounting in the aggregate to the sum of one million two hundred and eighty-seven thousand four hundred and thirty-six dollars and three cents, to bear interest from the first day of November, 1869, at the rate of eight per cent per annum; and whereas the said George W. Swepson heretofore conveyed to the said Milton S. Littlefield, subject to the payment

of the above-recited claim, his interest in the above-recited railroads; and whereas the said Littlefield has received authority from the legislature of the State of Florida and the several railroad companies to receive bonds to be issued by and for account of the several railroad companies, which bonds are to be exchanged for the bonds of the State of Florida to be issued for the purpose of aiding the finances of the said several railroad companies, all of which bonds are now in a state of preparation; and whereas the said Milton S. Littlefield has made a contract with S. W. Hopkins and Co., No. 71 Broadway, for the disposition of said bonds as the same may be issued, the proceeds of the issue of the bonds of the Florida Central Railroad Company of the said State of Florida, amounting to nine hundred and sixty thousand dollars, are to be applied to the payment of the existing liabilities of the said several railroad companies, including the sum of one hundred and fifty thousand dollars to be paid to the commissioners aforesaid, for the purpose of paying existing liabilities of the said Western Division of the Western North Carolina Railroad Company.

"It is understood and agreed by the parties of the first and second part that the proceeds of the sale of the said bonds, so to be issued by the said Florida railroad companies and the said State of Florida, are to be equally divided, dollar for dollar, between the Western Division of the Western North Carolina Railroad Company and the said Florida railroads, and as the commissioners aforesaid receive by this first sale of bonds only the sum of one hundred and fifty thousand dollars, it is further understood and agreed that out of the proceeds of the sale of the issue of the bonds of the Jacksonville, Pensacola, and Mobile Railroad there is first to be received by the commissioners aforesaid a sum sufficient to be equal to the amount received by and on account of the said Florida railroads, and then an equal amount is to be received by the said commissioners and the said Florida railroads, dollar for dollar, until the entire amount of one million two hundred and eighty-seven thousand and thirty-six dollars and three cents, with interest at eight per cent, as aforesaid, being the sum reported by the parties of the first part as due to the Western Division of the Western North Carolina Railroad, is fully paid.

"It is further understood and agreed by the parties of the first and second parts, that all the interest owned or claimed by the said parties of the first part, George W. Swepson and Milton S. Littlefield, or which they as individuals have a right to control, in the said Florida railroads, are hereby pledged for the faithful fulfilment of

this contract without the right on the part of any party to interfere with our management or control of the affairs of the road.

(Signed) "GEORGE W. SWEPSON,
Pres't Fla. Cent. R. R. Co.
M. S. LITTLEFIELD,
M. S. LITTLEFIELD,
Pres. J. P. & M. R. R. Co.
N. W. WOODFIN,
W. W. ROLLINS,
W. G. CANDLER,
W. P. WELCH,
Commissioners.

"Witnesses: M. W. RANSOM.
R. R. SWEPSON."

While these different proceedings were going on, and for a very considerable time afterwards, strenuous efforts were made by some parties interested to prevent a sale of the bonds of the State which had thus been put out. Notices of the fraud were extensively published both in this country and in Europe. Letters were written to those engaged in putting the bonds on the market, and suits were begun; but notwithstanding all this we are entirely satisfied from the evidence that twenty-eight hundred, or thereabouts, of bonds given in exchange for those of the Jacksonville, Pensacola, and Mobile company, and two hundred and six given for those of the Florida Central company, were actually sold and are now owned by *bona fide* purchasers, most or all of whom are citizens of Holland. We have reached this conclusion without the aid of the depositions taken in Amsterdam, which were excluded in the court below. There cannot be a doubt that the governor of Florida was active in promoting the sale, as was also, to some extent, the chairman of the commission appointed by the General Assembly of North Carolina. The bonds were taken at once to London, and from there put on the market in Holland, where most or all of the sales appear to have been made. The bonds were undoubtedly steeped in fraud at their inception, but they were nevertheless apparently State bonds on the market in a foreign country, among a people largely unacquainted with the English language, and offering tempting inducements by reason of their liberal interest to those who were seeking

investments. To promote their sale those interested in the scheme kept a part of the proceeds to meet the interest for a time as it matured. Under these circumstances it is easy to see how, in the course of two or three years, with the help of skilful managers, the amount now out would be found in the hands of persons who believed they were holding a good and safe investment. At any rate, upon the facts as they are presented to us, we must hold that in this suit the present owners of the bonds occupy the position of purchasers for value and in good faith and are entitled to relief accordingly.

In March, 1872, the trustees of the internal improvement fund of Florida commenced a suit in Duval Circuit Court, Florida, against the Jacksonville, Pensacola, and Mobile company, to recover the balance that was due upon the purchase of the Pensacola and Georgia and Tallahassee roads, for which the fraudulent check was given by Swepson, and to enforce an equitable lien they claimed to have on the property as security for the payment. After this suit was begun Daniel P. Holland recovered a judgment against the company and levied upon and sold its railroad under execution, he himself becoming the purchaser and getting into possession. He thereupon was made a party to the suit of the trustees, and in his answer claimed to be the owner of the road, free of all liens in favor of the trustees or of the State on account of the bonds exchanged for the company's bonds under the amended charter. At its January Term, 1876, the Supreme Court of the State decided in that case that the title which Holland took by his purchase was subject to the prior liens on the property, and that the bonds of the State were unconstitutional and void, but that the *bona fide* holders of the State bonds were entitled to the benefit of the statutory lien to secure the company bonds which were given in exchange for the State bonds. *Holland* v. *State of Florida*, 15 Fla. 455.

In March, 1872, the State of Florida instituted another suit in the Duval Circuit Court against the Florida Central Railroad Company and others, alleging a default in the payment of the interest due on the bonds of that company given in exchange for the bonds of the State, and seeking to enforce the statutory lien by sale and an application of the proceeds to the

holders of the bonds of the State. To this suit the company answered, setting up to some extent the frauds that are complained of in the present case, and further averring that the bonds of the State were unconstitutional and void and that the railroad bonds were not a lien. This suit also went to the Supreme Court of the State on appeal, and it was there decided, at the January Term, 1876, — 1, That the State bonds were unconstitutional; 2, that the Florida Central company was authorized by the act of Jan. 28, 1870, to issue the bonds held by the State, and that thereby a first lien was created on the road of the company in favor of the *bona fide* holders of the State bonds; 3, that there were no such circumstances connected with the issue, delivery, and exchange of the bonds as would excuse the company from their payment to *bona fide* holders; but, 4, that there was no proof in that case showing that any of the State bonds were actually so held. *State of Florida* v. *Florida Central Railroad Co.*, id. 690.

Afterwards, at the January Term, 1878, in the case of the *Trustees of the Improvement Fund* v. *Jacksonville, Pensacola, & Mobile Railroad Co.* (16 id. 708), the same court repeated its decision that the State bonds were unconstitutional and that the statutory lien was good in favor of *bona fide* holders. The court also in that case declared the lien of the trustees on the roads of that company, to be prior in right to all others, as security for the payment of the balance due on the sales under which the present company got title to its roads. The amount due, as found by the court below in its decree, is $661,845.55, as of April 2, 1874.

After some of these decisions, and on the 30th of December, 1876, the holders of the State bonds represented in the present suits, and having 2,751 of the Jacksonville, Pensacola, and Mobile issue, and 197 of the Florida Central, united, and, through a committee, applied to the governor of the State to seize and sell the roads under the statutory liens for their benefit. Complying with this request, the governor advertised the roads for sale, and thereupon the Western Division of the Western North Carolina Railroad Company filed two bills in the Circuit Court of the United States for the Northern District of Florida, one to enjoin the sale of the Florida Central

road, and the other that of the Jacksonville, Pensacola, and Mobile company. A preliminary injunction having been granted and the sale stopped, J. Fred. Schutte and others, representing the State bondholders, filed their bill in the same court to obtain a decree for the sale of the roads to pay their bonds. In all these cases pleadings were filed and testimony taken, but before any final hearing the General Assembly of North Carolina passed an act repealing all acts creating or continuing in existence the Western Division of the Western North Carolina company, and vesting in the Western North Carolina Railroad Company absolutely all its rights, credits, rights of action, and effects, with authority for the Western North Carolina company to prosecute, defend, and manage any or all suits pending in which the Western Division company was interested. This having been suggested to the court below after the cases were called up for hearing, the suits instituted in the name of the Western Division company were revived in the name of the Western North Carolina company, and the parties to the suit of Schutte and others corrected so as to adapt that case to this change in circumstances. A hearing was then had in all the suits, which resulted in decrees dismissing the bills of the Western North Carolina Railroad Company. In the Schutte suit a first lien was declared in favor of the trustees of the internal improvement fund upon the road of the Jacksonville, Pensacola, and Mobile company as far west as Quincy, to secure the payment of $463,175.37, with interest at eight per cent from March 20, 1869, that being the amount of the original purchase-money of that road unpaid, and a second lien in favor of the complainants upon the entire road of that company, including a few miles built west of Quincy, to secure the amount of State bonds held by them, given in exchange for the bonds of the Jacksonville, Pensacola, and Mobile company, the principal of which was $2,751,000, and the accrued interest $1,655,001.60. A first lien was declared on the road of the Florida Central company for $197,000 of principal, and $118,515.20 of interest, on account of bonds of the State given in exchange for the bonds of that company. Further provision was made in the decree for the sale of the roads separately, and for the application of the proceeds to the payment of the several

sums so found to be due from each respectively, in the order of the priority of the liens.

From the decrees dismissing the bills of the Western North Carolina company that company appealed. From the decree in the Schutte case the Western North Carolina company, the Florida Central company, and the Jacksonville, Pensacola, and Mobile company were allowed an appeal. In perfecting their appeal the Western North Carolina company and the Florida Central company gave bonds which operated as a *supersedeas*. Before, however, either appeal was docketed here, a settlement was concluded between the Western North Carolina company and the bondholders, and pursuant to an understanding to that effect, the appeal of that company was docketed and dismissed in this court on the 13th of September, 1879, pursuant to the 28th Rule.

At the last term an application was made to set aside the *supersedeas* obtained on the bond of the Florida Central, because the approval of the bond was obtained by fraud and perjury. This motion was granted. *Railroad Company* v. *Schutte*, 100 U. S. 644. After this, on application to this court in behalf of parties interested in the administration of the assets of the Western Division company, and upon a representation that the settlement which had been made by the Western North Carolina company was in fraud of their rights and without their consent, an order was made to the effect that the dismissal be set aside, and the cause reinstated, if the Western Division company filed with the clerk of this court by the first Monday in February a bond, such as was specially designated. This bond was given and approved on the second day of February, 1880, and in time.

Upon these facts, gathered, with the help of counsel, from the confused mass of papers brought here as the transcript of part of the record below, and filling nearly fifteen hundred printed pages, many questions have been presented and ably argued. We will first consider the special position which the Western North Carolina company, as the successor of the Western Division company, occupies. So far as the Florida Central is concerned, it is not claimed that the Western Division could have had any other rights than such as belong to a stockholder

holding a controlling interest in the stock of the corporation. Its moneys were wrongfully invested in that stock by an embezzler. Swepson, the embezzler, bought the stock as stock, and if the company whose money was embezzled adopts his purchase, the stock must be taken as he held it, and subject to such incumbrances as were put on it while in his hands. This is not seriously disputed.

As to the Jacksonville, Pensacola, and Mobile company, an attempt is made to reach the property of the company because of the trust deed or agreement executed by Dibble to Swepson, after the conveyances from the trustees of the internal improvement fund had been procured through Swepson's fraud. That instrument purported, however, to be in trust for Swepson to convey to the company to be created by an act incorporating the purchasers of the property as soon as the necessary legislation to that effect could be obtained. It was not executed in a form to pass title, and the security was only to continue under this plan until the contemplated corporation could be organized. When the act of incorporation was obtained, the company at once, without objection from Swepson, or any one in his interest, took possession of the property and operated the railroad as owner. Littlefield, who had succeeded to all of Swepson's rights under his several contracts, assumed the absolute control of the company and was its principal stockholder. Both Swepson and Littlefield were named as corporators of the Jacksonville, Pensacola, and Mobile company, incorporated on the same day with the purchasers, which shortly after, as no doubt was from the beginning intended, absorbed the purchasers' corporation and took possession of its property. No one ever disputed the title of the Jacksonville, Pensacola, and Mobile company until long after this litigation began, and the Western Division company in its original bill distinctly averred that the ownership of the property was in that company. Littlefield held a controlling interest in the stock, and that undoubtedly represented the proceeds of Swepson's embezzlements invested in the Pensacola and Georgia and Tallahassee bonds, through which the North Carolina company seeks to reach the property. This is clearly recognized in the contract of settlement entered into between Swepson, Littlefield, and the commissioners of

North Carolina, on the 16th of April, 1870, by which it was agreed that the North Carolina company should be paid the money it had lost from the proceeds of the sales of the state bonds to be issued to the Jacksonville, Pensacola, and Mobile company on the faith of its ownership of this very property. Certainly under such circumstances the North Carolina company is estopped from setting up title to the property as against the *bona fide* holders of these bonds. In this litigation that company can occupy no other position than that of an equitable owner of the stock of Littlefield in the Jacksonville, Pensacola, and Mobile company, and all incumbrances on the property are necessarily incumbrances on the stock which the property in legal effect represents. The settlement with Swepson was undoubtedly conditional, and not to be complete until the money agreed on was paid, but nevertheless the North Carolina company became by the transaction a seller of the bonds and is estopped accordingly.

This disposes also of the claim that the lien in favor of Swepson, created by the deed, or agreement, of trust to him, was saved by the proviso at the end of sect. 6 of the act incorporating the new Tallahassee company. It is apparent from the whole tenor of the instrument that this was not intended as a continuing security, and it is equally clear from the evidence that the stock standing in Littlefield's name represents all the interest which he or Swepson held in the property, as security or otherwise, when these suits were begun. In addition to this, as the instrument was imperfectly executed and was never recorded, it passed no title as against *bona fide* purchasers. The cases, then, in all their aspects are to be treated as they would be if the several companies were alone, each for itself, defending the claims made by the bondholders.

We proceed, then, to inquire whether the companies or either of them can successfully defend the Schutte suit. At the outset it will be conceded that the State bonds are unconstitutional. The Supreme Court of the State has three times so decided in cases where the question was directly presented by the pleadings, and apparently fully argued. In *State of Florida* v. *Anderson* (91 U. S. 667) we said this delicate question was "one it was eminently proper the courts of Florida

should determine," and while we are not now prepared to say that these decisions are conclusive on us, they certainly are not of such doubtful correctness as to make it proper that they should be disregarded. The conclusions were reached by applying the language of art. 12, sect. 7, of the Constitution of 1868, to the condition of affairs in the State when that Constitution was adopted. Such a question is peculiarly within the province of the courts of the State to decide, and we ought not to depart from what they have done, except for imperative reasons.

But it by no means follows that because the State is not liable on its bonds the companies are free from responsibility under their statutory mortgages. By the express provisions of the act the State bonds were to be given the company in exchange for its own bonds. The company, not the State, was to use and dispose of the State bonds. The object of the State was to aid the company with its credit. The State bonds were to be made payable to bearer, and negotiable, while the company bonds were to the State alone and not negotiable. The company bonds were to be coupon bonds payable at the same time and place as the State bonds, and, if the company paid its interest in gold, it was the duty of the State to pay in the same way. It is clear, therefore, the intention was that, as between the State and the company, the State was to be the guarantor of the company bonds, and the company the principal debtor. With the public, however, it was different. There the State was the debtor, and the company was only known through the statutes under which the bonds were put out, and the certificates indorsed on the bonds themselves, which were that the State held "the first-mortgage bonds of the railroad company for a like amount as security to the holder hereof." Such bonds of the State with such indorsements the company put on the market and sold. Under these circumstances the certificate of the governor as to the security held by the State is in legal effect the certificate of the company itself, and equivalent to an engagement on the part of the company that the bond, so far as the security is concerned, is the valid obligation of the State. The case is clearly within the reason of the rule which makes every indorser of commercial paper the

guarantor of the genuineness and validity of the instrument he indorses. We cannot doubt that under these circumstances the company is estopped, so far as its own liabilities are concerned, from denying the validity of the bonds. Having negotiated them on the faith of such a certificate, the company must be held to have agreed, as part of its own contract, whatever that was, that the bonds were obligatory.

What, then, were the engagements into which these several companies entered when, as is alleged, they accepted the bonds of the State in exchange for their own, and put them on the market for what they appeared on their face to be worth as commercial paper? And here it is proper to say that contracts created by, or entered into under, the authority of statutes, are to be interpreted according to the language used in each particular case to express the obligation assumed. Where the State is concerned the words employed are sometimes to be taken most strongly against the other party, but in this, as in other cases of contracts, language is to be given, if possible, its usual and ordinary meaning. The object is to find out from the words used what the parties intended to do. Every statute, like every contract, must be read by itself, and it no more follows that one statutory contract is like another than that one ordinary contract means what another does. Of course, general rules of construction may and should be called into use when required, and sometimes, when certain words used in statutes are understood to have a certain meaning, the same words will be given the same meaning in other like cases; still, in the end, it must be determined from the language used in each particular case what has been done, or agreed to be done, in that case. We have been thus careful to state these familiar principles in this connection to guard against the use of this case as authority in others where the contract, even though it be created by or under the authority of a statute, is not the same.

In the present case a statutory lien, in the nature of a first mortgage duly registered, was given the State on the property of the company to secure the principal and interest of the company bonds, with power in the governor, if default, for a certain length of time, should be made in the payment of principal

or interest, to take possession of, advertise, and sell the property for lawful money of the United States, and nothing else, unless the State, for its own protection, should become the purchaser, when the price might be paid in money or such obligations of the company as the State should hold. In case of a sale the purchase-money, as well as the evidences of the company's indebtedness taken as money, were to be paid into the State treasury, and promptly and exclusively applied to the payment and satisfaction of the bonds issued by the State under the authority of the act now in question. If the holders of the State bonds did not present them within ninety days after the sale, the treasurer was required to invest the money remaining in his hands in the securities of the United States, "to be held by the State of Florida as trustee for the bondholders," until demand of the payment of the bonds, when it was made the duty of the treasurer to turn over the securities to the bondholders. It would seem as though language could not be used indicating more clearly an intention to have the lien, what the governor when he made the exchange certified it to be, a security for the holder of the State bonds. It is quite true that, by sect. 13 of the act under which the Jacksonville, Pensacola, and Mobile company was organized, the company could, at any time before maturity, pay off its own bonds in national currency, or in bonds of the State; but that does not change the character of the trust created by sect. 11, in case no such payment was made. Here no payment of any kind has been made, and no foreclosure of the lien has been attempted by the State except in the interest of the bondholders. The State, from the beginning, has recognized its obligations as trustee, and, on the request of the bondholders, commenced the proceedings, under the authority of this statute, which have resulted in the present suits. Indeed, one of the decisions against the constitutionality of the bonds was rendered in a suit instituted by the State, apparently on its own motion, to enforce the lien on behalf of the bondholders. In our opinion there is no occasion for applying here the doctrines of subrogation, because, in unmistakable language, the statute has made the mortgage of the company security for the payment of the obligations of the State. This we understand to be in accordance with the opinion of the State

court, as expressed in the Holland and Florida Central cases, reported in the 15th and 16th of Florida Reports.

It is contended, however, that as the provision of the act in respect to the execution and exchange of the State bonds is unconstitutional, the one in relation to the statutory lien on the property of the company is void also, and must fall. We do not so understand the law. Undoubtedly a constitutional part of a statute may be so connected with that which is unconstitutional, as to make it impossible, if the unconstitutional part is stricken out, to give effect to what, taking the whole together, appears to have been the legislative will. In such a case the whole statute is void; but in this, as in every other case of statutory construction, all depends on the intention of the legislature, as shown by the general scope of the law. To our minds it is clear, in the present case, that the object of the legislature was, not to create a debt which the State was expected to pay, but to aid the company in borrowing money upon the credit of the State. As between the State and the company the debt for the money borrowed was to be the debt of the company. If the State paid its bonds from its own funds the mortgage could be enforced to compel the company to make the State good for all such payments. If the State did not pay, then the creditors had their own recourse upon the mortgage. The State credit, so far as the State and the company were concerned, was only to aid the company in borrowing money on its own bonds. In any event, the company was to be bound for the payment of the entire debt when it matured, and its property was to be given as security. Under these circumstances, it seems to us that the unconstitutional part of the statute may be stricken out and the obligation of the company, including its statutory mortgage in favor of the State bondholders, left in full force. The striking out is not necessarily by erasing words, but it may be by disregarding the unconstitutional provision, and reading the statute as if that provision was not there. These bonds, as State obligations, were void, but, as against the company which had actually put them out, they were good.

This disposes of this part of the case so far as the Jacksonville, Pensacola, and Mobile company is concerned. No claim

is made that the statute does not on its face authorize that company to exchange its bonds for those of the State, or that the lien is not created by the exchange. Neither is it claimed that the necessary corporate action was not had to get the bonds out under the forms of law. Although on the 10th of December, 1870, a resolution was passed by the directors of the company, ordering a recall of the bonds on account of the proposed misapplication of the proceeds of the sales to be made, an actual withdrawal was never effected, and the bonds have got into the hands of *bona fide* holders. The very resolutions which directed the recall asserted the previous lawful and regular issue.

As to the Florida Central company, however, the case is different, and it is claimed not only that the statute did not authorize the exchange of the bonds and the creation of the lien, but also that the company did not in its corporate character execute its own bonds or make the exchange.

As to the first question, we deem it sufficient to say that the Supreme Court of Florida has distinctly decided that in the case of this company, as well as the other, the statutory authority was complete. The point was directly made by the pleadings and as directly passed on by the court. Although the bill in the case was finally dismissed because it was not proved that any of the State bonds had been sold, the decision was in no just sense dictum. It cannot be said that a case is not authority on one point because, although that point was properly presented and decided in the regular course of the consideration of the cause, something else was found in the end which disposed of the whole matter. Here the precise question was properly presented, fully argued, and elaborately considered in the opinion. The decision on this question was as much a part of the judgment of the court as was that on any other of the several matters on which the case as a whole depended.

This, like the constitutionality of the act, is a question of local law. It depends on the peculiar condition of local affairs. If the decision is not conclusive on us, it is of high authority under the circumstances, and we are not inclined to disregard it. The holders of the commercial paper put out by the com-

pany and bought on the faith of the State are entitled to the benefit of every presumption in their favor.

The next important inquiry is whether the necessary authority for the issue and exchange of the bonds was given by the corporation itself. Certainly the resolution of June 2, 1870, is on its face sufficient for that purpose, as is also that of April 13, 1871. It is true Littlefield now swears that these meetings of the stockholders and directors were irregular and without sufficient notice, but it is worthy of remark that, in the resolution of November 21, rescinding that of June 2, there is no pretence that the original resolutions were not lawfully passed and binding on the company. The rescission is put entirely on the ground that the form of the bonds was not such as to carry out the intention of the company in directing their issue. Mr. L'Engle also, in his letter to Boissevain, giving notice of the frauds that had been practised on the company, substantially conceded that the issue of the bonds was authorized by the company, and confined his protest to the improper use that was being made of them. It is clear to our minds from the whole case that but for the fraudulent disposition of the bonds the corporate action of the company in putting them out would have been considered sufficient. Littlefield's character, as it appears all through this voluminous record, is not such as to entitle him to any favorable consideration as a witness or otherwise. He and Swepson have both shown themselves capable of the most shameless frauds, and we cannot but look with suspicion upon everything they do or say. We regret it is not in our power to relieve the corporations, whose affairs they have been permitted to manage, from the consequences of their wanton breaches of trust; but in our judgment this cannot be done without injuring those who are innocent of all wrong.

It is next contended, that as the bonds were fraudulently put out by the officers of the companies, and are unconstitutional, the recovery must be confined to the amount actually paid for the bonds to the agents of the companies. As we have endeavored to show, the bonds, although void as to the State, are valid as to the company that sold them. Having been put on the market by the companies as valid bonds, the companies are estopped from setting up their unconstitutionality. As against

the companies, they occupy in the market the position of commercial securities, and may be dealt with and enforced as such. The companies, through their faithless agents, are in a position where they must meet those they have dealt with commercially, and respond accordingly. In commerce, commercial paper means what on its face it represents, regardless of what its maker or promoter may have got for it. The bonds of the State in the open market purported to be what they called for. The companies put them out, and in legal effect, as we think, indorsed them. A *bona fide* holder can now require the indorser to respond to his indorsement commercially; that is to say, by paying what he in effect agreed the maker must pay.

We believe we have now disposed of all the questions the record presents. It has been suggested that since the appeal the property has been sold under the decree below. That is not shown by the record. The *supersedeas* in favor of the Florida Central company we have decided was fraudulently obtained. The justice who accepted the bond was imposed upon. That *supersedeas* was promptly vacated when the facts were called to our attention. The *supersedeas* secured by the Western North Carolina company was, to say the least, suspended when that company voluntarily dismissed its appeal under the 28th Rule. This suspension was not vacated until the bond of indemnity was filed on the 2d of February, 1880. It will be for the court below to determine, when it is called on to confirm any sale that has been made, whether a sale was stayed by a valid subsisting *supersedeas*. From relief against any order in that behalf the parties must resort to such measures as they may be advised they are entitled to. We cannot, from anything now before us, settle any such question.

Decrees affirmed.

These cases were decided before MR. JUSTICE SWAYNE and MR. JUSTICE STRONG resigned.

MR. JUSTICE FIELD was not present at the argument of these causes, and took no part in deciding them.

CHICAGO v. TILLEY.

A party to a contract, who has performed part of it according to its terms, and is prevented from completing it by the failure of the other party, is entitled to compensation for the work performed.

ERROR to the Circuit Court of the United States for the Northern District of Illinois.

The facts are stated in the opinion of the court.

Mr. William C. Goudy, for the plaintiff in error.
Mr. Melville W. Fuller, contra.

MR. JUSTICE WOODS delivered the opinion of the court.

On Aug. 28, 1872, the City of Chicago entered into a contract with the County of Cook, of which it was the county seat, for the joint occupancy of block No. 39, in the city, known as the court-house square, whereby, among other things, it was agreed as follows: —

"The said parties shall join in the erection of a public building on said block 39, for the use of the county and city governments respectively, and the courts of record of said county.

"The general exterior design of said building shall be of a uniform character and appearance, as may hereafter be agreed upon by the board of county commissioners and the common council of the city of Chicago.

"That portion of said building situate west of the north and south centre line of said block shall be erected by the city of Chicago at its own expense."

In June, 1875, the county, being ready to proceed with its portion of the building, appointed James J. Egan as its architect, who entered upon the preparation of plans and the construction of the foundation for the county's portion of the building.

On Aug. 9, 1875, the city council passed an ordinance which repealed all former ordinances, orders, and resolutions of the council, pertaining to the erection and construction of the city's portion of the new city hall and court-house, and rescinded all former action in relation to the appointment of architects, and

expressly provided that "nothing in this ordinance shall be construed as to in any manner affect, or in any wise rescind, impair, or amend any contract or other agreement now subsisting between the city of Chicago and the county of Cook."

On the same day the council passed an order, the material portion of which is as follows: —

"*Ordered*, that one architect shall be appointed, whose duty it shall be to prepare the necessary plans and specifications for the erection of the city's portion of a new city hall and court-house, upon block 39, in the original town of Chicago, commonly known as the court-house square, and the general exterior design of the same to be of a uniform character and appearance, as shall be agreed upon by said architect and board of public works and said county commissioners, said architect, when the plans and specifications shall have been prepared by him, and agreed upon by said board, to take charge of and superintend the construction of said building to its completion under the direction and control of said board of public works, and said architect shall also do and perform every other service or thing necessary to be done, in and about the construction and erection of the city's portion of said building to completion, which shall be required to be done and performed by him as such architect, by said board of public works, and said architect shall receive from the city of Chicago as his full compensation for his entire services as such architect the sum of $37,500, said sum being three per cent of the sum of $1,250,000, which shall be the entire cost of the city's portion of said building; and such compensation shall be in full for all services of such architect, and no other or further compensation whatever shall be paid to him by said city."

The order further provided that, whenever the plans and specifications should be agreed upon in manner aforesaid, the board of public works should proceed with the city's portion of said building.

After the passage of this order the city council proceeded to elect an architect to act under its provisions, and Tilley the defendant in error was chosen.

On August 24 he was officially notified of his election, and on the same day made known to the officers of the city his acceptance of the office, and offered to enter into a written contract

and give bonds; but they were not deemed necessary by the city authorities, and were dispensed with.

Soon after the acceptance of employment by him as architect, under the order of August 9, he proceeded to prepare plans for the city's portion of the building.

He made plans for the several floors or stories of the buildings, consulted with the heads of the various departments of the city government as to the accommodations their departments would respectively need, and from the information thus obtained made interior plans for the proposed building, and he also prepared designs and plans for the exterior of the building; these plans or designs were exhibited to the members of the board of public works and to the city officers, from time to time, during the months of September, October, and a part of November, 1875.

The board of public works proceeded to advertise for bids for excavations for the foundations, and the plaintiff prepared the plans and specifications for such excavations, and also prepared plans and specifications for the foundations and subbasement of the proposed building.

Early in November it was ascertained that the plans prepared by Tilley did not harmonize with the plans which had been prepared by Egan, the architect of the county, and pursuant to a resolution of the common council, passed November 15, a joint meeting of the mayor, the city board of public works, the building committee of the common council, the president of the board of county commissioners, and the building committee of the county board, was held to consult in regard to some feasible plan by which the difference arising between the city and county architects might be satisfactorily settled. This joint meeting was held, and was attended not only by the city and county officials mentioned, but also by the plaintiff as architect of the city, and Egan as architect for the county. They had their respective plans there, and explained them to the officials in attendance. The result of this meeting for consultation and examination of plans was a direction by the joint meeting to the architects to prepare a joint compromise plan for the exterior of the building.

The joint meeting adjourned to a future day, for the purpose

of giving the architects time to prepare their new plan or plans. On the day to which the adjournment was taken the joint meeting reassembled, and Egan presented sketches of a compromise plan, embodying substantially the features upon which the building is now being constructed; but Tilley presented no plan, and did not concur in or indorse Egan's plan.

After an examination and discussion of Egan's compromise plan, the proof tends to show that it was adopted by the joint meeting, and the county authorities proceeded to act upon that plan as the one which had been agreed upon and settled by them and the city authorities. After the last joint meeting the proof tends to show that Tilley proceeded to prepare "compromise plans," which, after a time, he exhibited in the ante-room of the council-chamber, and also to members of the board of public works at the office of the board.

On Jan. 13, 1876, at a special meeting of the council called for the purpose of considering matters pertaining to the city hall and court-house, a resolution was passed by the council which, in effect, directed the board of public works to adopt Tilley's compromise plans.

After this meeting of the common council he proceeded to complete his compromise plans, including floor plans for each story, specifications for foundations and sub-basements, and plans for exterior elevation, so that early in the spring of 1876 his plans were so far advanced that he could have proceeded with the construction of the building, and could have had the tracings and working drawings ready as soon as needed for the progress of the work. He was ready at all times to proceed with the construction of the building, but was not allowed to do so.

In the fall of 1876 and spring of 1877, when the city council determined to proceed with the construction of the building, he offered his services as architect, but they were refused; that is to say, he offered to proceed and perform his part of the contract by supervising the erection of the building when the city was ready to proceed with its construction.

On Aug. 27, 1878, he brought this suit. He declared on the special contract contained in the order passed by the city

council on Aug. 9, 1875, and claimed the contract price for his services, namely, $37,500. His declaration also contained the common counts for work and labor, goods sold, money lent, &c.

The following is a copy of the account appended to the declaration: —

"THE CITY OF CHICAGO to THOMAS TILLEY, *Dr.*

"For services as architect in preparing plans for the new city hall	$25,000 00
" services as architect in preparing a second set of plans with specifications and diagrams for the new city hall	42,500 00
" services as architect in superintending the building of the new city hall	42,500 00
	$110,000 00"

The City of Chicago pleaded the general issue.

The evidence introduced on the trial of the cause tended to establish the facts above recited.

Thereupon the court, among other things, charged the jury as follows: —

"There is no provision in the contract, or in any subsequent dealings or relations between the parties, that shows how this sum of $37,500, the compensation that Tilley was to receive for his services, was to be paid, but I think the fair presumption is, inasmuch as it was expected that the erection of this work would extend to a long term of years, perhaps, that the plaintiff was not to wait until the entire completion of the work before he received some compensation, and that he was to be paid from time to time upon some basis to be established, so that when the work was done he should not have received more than the aggregate amount of his compensation.

"Tilley was employed like any other employé of the city, to do a certain thing. It was, as far as practicable, to contribute his professional skill, and the suggestion of plans which might or might not be adopted.

"It may then be considered as undisputed that Tilley was employed to prepare plans and specifications, and did some

work in the line of his employment, and for this he is entitled to compensation, as far as possible, at the rate for which he was to do the whole work under the contract; that is to say, he had agreed to prepare plans and specifications and superintend the entire construction of the building for $37,500. He did a part of that work. He did something in the line of his duty; and if it is possible to ascertain from the proof and contract how much his compensation should be for the work, in the ratio of the entire compensation, the jury should arrive at that."

The City of Chicago excepted to these charges. There were other charges excepted to, but these present all the questions which are raised by the assignments of error.

The jury returned a verdict for Tilley for $13,000, on which the court rendered judgment. This writ of error was brought by the city to reverse that judgment.

The assignments of error all refer substantially to the construction put by the court upon the contract between the plaintiff in error and the defendant in error. If the contract was rightly construed by the court, then all its charges to the jury were correct and the plaintiff in error has no ground of complaint.

The question at what time the defendant in error was to receive his compensation had become entirely immaterial. If he was entitled to recover at all, he could, at the time the suit was brought, lawfully claim all the compensation that was owing to him. The point which the plaintiff in error makes is that he was entitled to nothing. Its argument is that the contract was an entire one, and that he was entitled to no compensation until he had fully completed and performed it; and not having done this, was entitled to nothing.

The evidence submitted to the jury tended to show, and the jury must have found, that the defendant in error, when the city council decided in the fall of 1876 to go on with the construction of the building, offered to proceed and perform his part of the contract, and that his services were refused.

The question is thus raised whether, up to that time, he had done what the contract required him to do. It is clear from the record that he never did procure the concurrence of the

board of county commissioners in his designs for the exterior of the building.

The city claimed that his contract was not only to prepare the necessary plans and specifications for the erection of the city's portion of the new city hall, but to obtain the approval and adoption of his plans by the board of county commissioners. In our opinion this was not the meaning of the contract.

The agreement between the city and county for the erection of a building for their joint use, whose general exterior design should be of uniform character and appearance, one half to be built by the city, at its own expense, and the other by the county, was still in force. The county had previously appointed its own architect. The contract between the city and the defendant in error was not based on the idea that there was to be but one design prepared, and that by him, which was to be satisfactory both to the city and county, but that both architects were to devise plans, and there was to be a general conference and a selection of one or the other of these plans, or the adoption of some compromise plan.

The city could not reasonably expect any architect to give his time and labor in devising plans for a building on the condition that he was to receive no compensation unless he procured the assent to his plans of another body of fifteen persons, which had employed its own architect to devise plans for the same building. No prudent man would agree to such a con tract.

It seems reasonably clear from the contract itself, and the circumstances under which it was made, that the city took the risk of securing the agreement of the county to some plan. It was indispensable that there should be some concurrence of views between the authorities of the city and county touching the external appearance of the building. The antecedent contract between the city and the county required this. It was clear that sooner or later the authorities of the city and county would concur in some common plan. The contract between the city and the defendant in error was for his services to aid in devising a plan to which the county might be induced to accede. The county at the same time had its own architect at

work devising a plan for the same building. The city and county would thus have two designs from which to make their choice, and, if neither were acceptable, have two architects to devise a compromise plan.

The preparation of a design for the exterior of the building was but a small part of the work which the defendant in error contracted to do. He was required to prepare plans and specifications for excavations for the foundations, and for the foundations themselves, and for the sub-basement; to prepare plans and specifications for the interior of the building, to divide it into the apartments necessary to accommodate the business of the city; to lay off the corridors, halls, staircases; to devise all the interior conveniences and decorations of a large and costly building; to select and specify the materials of every description that were to be used; to decide upon and make drawings for the structure of the inside walls, the floor, the roof; to make designs for the wood-work; and to provide for plastering, plumbing, and painting. All these matters were to be settled by him, and minute and detailed specifications were to be prepared for the entire work; so that contractors might be able to bid intelligently.

The work which the defendant in error undertook to do, in preparing the necessary plans and specifications for the building, was a vast one, requiring much time and great labor and skill on his part, and the aid of draftsmen, clerks, and other assistants. To construe his contract to mean that he was to do all this work and receive no compensation for it unless he could induce the board of county commissioners to agree to his plan for the exterior design, and reject that of their own architect, is to give it a meaning which in our judgment neither of the parties to it ever contemplated. It is no reply to this to say that he might have prepared his designs for the exterior of the building and secured the concurrence of the county board therein before proceeding with the residue of the work. There is nothing in the contract which indicates that the defendant in error was expected to do this. If such had been the purpose of the parties, it would have been easy to express it. On the contrary, by the very terms of the contract, it was as much the duty of the city board of public works as of the defendant in

error to procure the approval by the county board of the exterior design prepared by him.

The fact is apparent that the contingency of a disagreement between the city and county authorities in regard to the exterior plan of the building was not anticipated, and no provision was made for it. The thing to be done by the defendant in error was "to prepare the necessary plans and specifications for the erection of the new city hall and court-house," and to superintend the erection of the building when the exterior design had been agreed upon by himself, the board of public works of the city, and the county commissioners.

The proceedings of the city council show that this was the construction which it put on its contract with the defendant in error. In November, 1875, when it was found that his plans and those of Egan did not harmonize, the city council passed a resolution calling a joint meeting of the mayor, the board of public works, the building committee of the council, and the president and building committee of the county board, to consult about some plan by which the difference between the city and county architects might be satisfactorily settled. The result of the meeting was a direction to the two architects to prepare a compromise plan for the exterior of the building.

The compromise plan prepared by Egan appears to have been adopted by a joint meeting of the same parties held on a subsequent day. Nevertheless, afterwards, on Jan. 13, 1876, the city council passed a resolution by which they directed the board of public works to adopt certain compromise plans prepared by the defendant in error.

All this shows that it was not considered by the city that the contract imposed on the defendant in error alone the duty of bringing about the assent to his plans of the county board.

If the construction we have put upon the contract is the correct one, then the defendant in error having performed a part of it according to its terms, and having been prevented from performing the residue by the failure of the other party to do its part, may receive compensation for the work actually performed. *Planché* v. *Colburn*, 8 Bing. 14; *Goodman* v.

Pocock, 15 Q. B. 576; *Hall* v. *Rupley*, 10 Pa. St. 231 *Moulton* v. *Trask*, 9 Metc. (Mass.) 577; *Hoagland* v. *Moore*, 2 Blackf. (Ind.) 167; *Derby* v. *Johnson*, 21 Vt. 17.

This, in effect, disposes of the assignments of error. All of them turn upon the construction of the contract between the parties.

If the defendant was not bound by the contract to obtain the assent of the county board to his plans before he was entitled to compensation, then all the instructions given by the court were correct, and none of the assignments of error are well founded.

Judgment affirmed.

TILLEY v. COUNTY OF COOK.

1. Where there is no contract, express or implied, between the parties, usage or custom cannot make one.
2. A county and a city within its limits proposed to erect public buildings, the portion appropriated to the uses of each to be paid for by them respectively. They jointly offered a premium for plans. A. furnished one, and received the promised compensation. There was no further contract between the parties. The city and county severally adopted a resolution selecting his plan, subject to such modifications as might thereafter be determined upon if his estimate as to the cost of construction should be verified. He brought suit against them to recover five per cent of the estimated cost of the buildings. *Held*, 1. That he was not entitled to recover. 2. That evidence of the value of his services in making the estimate was properly excluded, inasmuch as he failed to show that they had been rendered at the instance of the defendants.

ERROR to the Circuit Court of the United States for the Northern District of Illinois.

The facts are stated in the opinion of the court.

Mr. Melville W. Fuller, for the plaintiff in error.

Mr. William C. Goudy and *Mr. Consider H. Willett*, *contra*.

MR. JUSTICE WOODS delivered the opinion of the court.

This was an action of assumpsit, brought by Tilley against the County of Cook and the City of Chicago. The declaration

consists of the common counts for work and labor done, goods sold and delivered, money lent and advanced, and upon account stated.

The following is a copy of the account sued on, which was appended to the declaration: —

"The COUNTY OF COOK and the CITY OF CHICAGO to THOMAS TILLEY, *Dr.*

"For services as architect in preparing plans, drawings, specifications, diagrams, estimates, and details for the new court-house and city hall, and superintendence of erecting the same, five per cent on $2,909,629, the estimated cost of the building, the plan being that known as 'Eureka' . . $145,481 45"

The defendants pleaded the general issue.

By provision of the Constitution and laws of the State of Illinois, the county affairs of Cook County are managed by a board of commissioners of fifteen persons. Ill. Const. 1870, art. 10, sect. 7. The affairs of the city are controlled by the common council. Private Laws of Illinois, 1863, p. 40.

The County of Cook was the owner of a block of ground in the city of Chicago, known as the court-house square, on which it was proposed to erect a building to be used as a city hall and county court-house, in which the business of the city and county might be conducted.

On July 10, the board of county commissioners, and on July 15, 1872, the common council, adopted, each for itself, the following resolution: —

"*Resolved*, That it is the sense of the joint meeting that they recommend to the common council of the city of Chicago and the board of commissioners of Cook County that the city of Chicago and the county of Cook will authorize the building committees of the several boards to offer a prize of five thousand dollars ($5,000) for the best plan, two thousand dollars ($2,000) for the second, and one thousand dollars ($1,000) for the third best plan for a court-house and city hall, to be erected jointly by the county of Cook and the city of Chicago, upon the public square in the city of Chicago, the said plans to be submitted to respective boards, in conjunction with the board of public works of the city of Chicago."

On Aug. 5, 1872, the common council of the city and the board of county commissioners passed an order providing for a joint contract between the city and county for the erection of a building on the court-house square, and on Aug. 28, 1872, the contract was executed. It declares that it was for the public convenience that the courts and the offices of the city "should be located at some one convenient point and readily accessible to each other," and provides for the erection, by the city and county, of a public building on the court-house square, for the use of the county and city governments respectively, and the courts of record; that the general exterior design of the building shall be of such uniform character and appearance as may be agreed upon by the board of county commissioners and the common council of the city.

The contract further provides as follows: —

"3. That portion of the said building situate west of the north and south centre line of said block shall be erected by the city of Chicago at its own expense.

"4. The city of Chicago shall occupy that portion of said block west of the said centre line for a city hall and offices incidental to the administration of the city government, and for no other purpose whatever, except as hereinbefore provided.

"5. Each of the parties will heat, light, and otherwise maintain and furnish its own portion of said building."

On Nov. 25, 1872, the building committees of the common council and the county commissioners published an advertisement calling for designs for the proposed building.

The advertisement declared that, in order to secure suitable designs, the city and county jointly offered the following premiums: For the best design, $5,000; for the second best, $2,000; and for the third best, $1,000.

It provided as follows: —

"Each design must have a device or motto marked on each drawing, and be accompanied by a sealed letter giving the name of the author, which will be opened after the final award is made, only for the purpose of ascertaining the names of the successful architects and for the return of the unsuccessful drawings to their authors.

"Each competitor will give the cubical contents of his building, and an estimate of the cost of the same complete."

Designs were submitted by a large number of architects, and the building committees of the city council and the board of county commissioners made a report awarding the prizes. Tilley, who had adopted for his drawing the word "Eureka" as the device or motto to distinguish it, was awarded the third prize, of $1,000.

On Aug. 4, the county board, and on Aug. 18, 1873, the city council, adopted the following resolution: —

"That the report of the majority of the joint committee awarding the prizes for plans of court-house and city hall shall be concurred in and the award confirmed, provided that nothing herein or in said report contained shall be construed as indicating a preference for either of said plans as to which shall be finally adopted, from which the said building shall be erected."

Tilley was paid the thousand dollars awarded to him as a prize.

Afterwards, on August 25, the county commissioners, and on Oct. 10, 1873, the city council, adopted the following resolution: —

"That the plan known as Eureka, or number 5 (five) in the collection, submitted for court-house and city hall, be, and is hereby, selected and adopted as the plan after which to build such court-house and city hall (the board of commissioners of Cook County concurring), subject to such change and modifications as may hereafter be determined upon by the common council of the city of Chicago and the county board, provided the estimate of the architect who presented said plan as to the cost of construction of the building shall be verified."

Upon the trial of the case, the testimony tending to establish the facts above recited having been given in evidence by the plaintiff, he was sworn as a witness in his own behalf, and testified that he was an architect of fifteen years' standing, that he had made the design designated by the word "Eureka," and that, after the passage by the city council and board of county commissioners of the resolution last above mentioned, he had verified the cost of the construction of the proposed building in the way customary and usual with architects, which was made up at the rate of thirty-five cents per cubic foot for

the building, and was indorsed by fourteen or fifteen architects.

The plaintiff produced before the jury all his plans for which the prize had been awarded him. He offered to prove their value, the time employed and the expense incurred in the preparation of them. The court excluded the evidence so offered.

He further offered evidence to establish that by the usage and custom of architects, in the absence of a special contract, the superintendence of the construction of a building belonged to the architect whose plans were adopted. This was also excluded.

He also offered evidence to prove that by the usage and custom of architects, where prizes for plans were offered, the plans of the successful competitors belonged to them, and, if subsequently adopted as the plans to build by, were always paid for in addition to the prize itself. To this the defendants objected, and the court sustained the objection.

He also offered evidence to establish the value of the services rendered in verifying the cost of the proposed building according to the "Eureka" plans; to which the defendants objected, and the court sustained the objection.

This was all the evidence given or offered to be given in the cause.

The plaintiff then rested his case; whereupon the court directed the jury to find for the defendants.

The jury returned a verdict for the defendants, and judgment was entered thereon.

To reverse this judgment this writ of error was brought.

It will be observed that no evidence was introduced or offered to show that the plans of the plaintiff were used by the defendants, or either of them, or that the building for which they were used was ever erected.

It is clear that if the plaintiff has any right of action it must arise on the resolutions adopted by the board of county commissioners, Aug. 25, and the city council, Oct. 10, 1873. All that had taken place before those dates was the making of a contract between the city and the county, by which they agreed to join in the erection of a public building in the court-house

square, each party to build and pay for its own part of the structure; an offer by the city and county of three prizes for the best plans; an award of the prizes by which the third prize, of $1,000, was given to the plaintiff in error, with the distinct notice that "the award should not be considered as indicating a preference for either of said plans as to which should be finally adopted from which the said building should be erected;" and the payment to and the receipt by the plaintiff of the prize awarded him.

By the payment to the plaintiff in error of the prize, the defendants discharged every obligation due from them to him arising out of the preparation of plans for the proposed building. Upon that payment being made, no contract whatever, either express or implied, existed between the plaintiff and the defendants.

If, therefore, the plaintiff had any right of action against defendants, it must have arisen by reason of the adoption of the resolution just mentioned, and what was done by plaintiff after its adoption.

The resolution was the voluntary act of the city council and county commissioners. It was not a proposition, but simply the expression of a purpose to build their structure after the plans of the plaintiff, subject to such changes and modifications as might thereafter be determined upon by the common council and the county board. The resolution was not adopted at his instance or suggestion. Suppose that the day after its adoption the resolution had been reconsidered and rescinded, would the defendants nevertheless have been liable for the value of the plans and for five per cent on the estimated cost of the building for superintendence, amounting in the aggregate to near $146,000?

Suppose a private person should announce his purpose to build a house after a design which he had seen in an architect's office, but before he begins the execution of his purpose changes his mind, never calls for or uses the plans, or even builds the house, is he liable to the architect for the value of the plans and for superintendence? In such a case there certainly is no contract between him and the architect upon which a recovery can be based.

The claim of the plaintiff is that by the adoption of the resolution by the city council and the county board, without any act done or assent on his part, they were bound to go on and erect the building on his plans and expend $2,909,000, its estimated cost.

The resolution did not bind the plaintiff to furnish his plans and superintend the building. There was no mutuality, and, therefore, no consideration, — both of which are essential to a contract. Notwithstanding the resolution, the plaintiff might have said, I will not furnish my plans, and I will not superintend the building, and the defendants would have had no claim on him.

If one does not accede to a promise as made, the other party is not bound by it. *Tuttle* v. *Love*, 7 Johns. (N.Y.) 469. When A. signs a writing by which he declares he will sell to B. his house at a certain price, this is a mere proposition and not a contract. *Tucker* v. *Woods*, 12 id. 189.

In *Wood* v. *Edwards* (19 id. 205), where A. wrote that he had agreed to a substitute for an existing agreement which he would execute, Spencer, C. J., said the proposition of A. to execute the new agreement was not binding on him, as well on the ground of want of consideration as want of mutuality, since the plaintiffs on their part were not bound to execute the agreement.

In the case of *Kingston* v. *Phelps* (Peak. N. P. C. 299), the plaintiff proved that the defendant consented to be bound by an award to be made on a submission by other underwriters on the same policy, but the witness proved no agreement on the part of the plaintiff to be bound by the award. Lord Kenyon held that there was no mutuality, and therefore the defendant's agreement was a mere *nudum pactum*.

An offer of a bargain by one person to another imposes no obligation upon the former, unless it is accepted by the latter upon the terms on which it was made. Any qualification of or departure from them invalidates the offer, unless the same be agreed to by the party who made it. *Eliason* v. *Henshaw*, 4 Wheat. 225. See also *Webb* v. *Alton Marine & Fire Insurance Co.*, 8 Ill. 225; *Maclay* v. *Harvey*, 90 id. 525.

In this case, there being only an expression of purpose by one party to erect a building according to plans antecedently made by another, and no obligation entered into by the other party, and no plans used or building erected, there was no contract between the parties, either express or implied.

If we are correct in this conclusion, then all the evidence offered by the plaintiff to prove the value of the plans, and the time employed, and the expenses incurred in their preparation, was irrelevant and immaterial.

The only purpose for which such evidence could be admitted would be to prove the damage sustained by the plaintiff by the breach of his alleged contract with the defendants. But if he had no contract, express or implied, he was entitled to no damage, and could show none.

It is complained that the evidence offered to prove the custom of architects was excluded. We think it was rightly excluded.

Proof of usage can only be received to show the intention or understanding of the parties in the absence of a special agreement, or to explain the terms of a written contract. *Hutchinson* v. *Tatham*, Law Rep. 8 C. P. 482; *Field* v. *Lelean*, 30 L. J. Ex. 168; *Baywater* v. *Richardson*, 1 Ad. & E. 508; *Robinson* v. *United States*, 13 Wall. 363.

In all cases where evidence of usage is received, the rule must be taken with this qualification, that the evidence be not repugnant to or inconsistent with the contract. *Holding* v. *Pigott*, 7 Bing. 465, 474; *Clarke* v. *Roystone*, 13 Mee. & W. 752; *Yeats* v. *Pim*, Holt, N. P. 95; *Trueman* v. *Loder*, 11 Ad. & E. 589; *Bliven* v. *New England Screw Co.*, 23 How. 420.

The inference from these principles is inevitable, that, unless some contract is shown, evidence of usage or custom is immaterial.

The plaintiff says he was ready to prove a custom of architects, that when prizes were offered for plans of a building, the successful competitor remained the owner of his own designs, and if they were adopted he was entitled to compensation therefor in addition to the prize, and that, by the same custom, the adoption of his plans entitled him to superintend the erec-

tion of the building, and to the usual remuneration therefor. He claims, therefore, that in view of this custom, the adoption of his plans by the passage of the resolution referred to by the city and county boards, amounted to a contract, on the part of the defendants, to pay for the plans and employ him to superintend the erection of the building, and pay him therefor.

The offer of the plaintiff to prove certain facts having been rejected, he must be presumed to be able to prove what he offered to prove. We must, therefore, assume that the custom which he offered to prove did, in fact, exist. But what was that custom? Clearly, that if the building was erected according to the successful plans, the architect was entitled to pay therefor. That was such an acceptance and adoption of his plans as would give him the right to compensation therefor, and the right to superintend the erection of the building and receive the usual remuneration. The custom certainly did not bind the party who offered prizes for plans, after having paid the prizes, to pay also for plans that he never used, and for superintendence of a building that he never erected, merely because he had selected a particular plan and announced his purpose to build in accordance with it. If such were the custom and usage of architects in Chicago, it was an absurd and unreasonable custom, and, therefore, not binding. *United States* v. *Buchanan*, 8 How. 83.

If the plaintiff had offered to show that after the passage of the resolution by which his plan was accepted, the defendants had erected their building according to his plans, then the evidence of the custom would have been pertinent. But he made no such offer, and it is to be presumed no such fact existed. The evidence of this custom was, therefore, properly excluded.

The plaintiff complains that he was not allowed to prove the value of his services in verifying the cost of the proposed building according to his plans.

We think the court was right in excluding this evidence. There was no proof nor any offer of proof to show that the services of the plaintiff were rendered at the instance or request of the defendants or either of them. From all that appears, the

services were voluntarily rendered by the defendant, and no use whatever was made of the results of his investigation. The law, therefore, does not imply a contract to pay for them, and proof of their value was quite immaterial.

The evidence rejected was properly excluded on another ground. The defendants were charged in the declaration with a joint liability, but there was no privity between them, either by law or contract. The evidence offered was to show a joint liability. So far as it went it failed to do this; on the con trary, it was made to appear that each of the defendants was building its own part of the structure at its own expense, and for its own use. After the award and payment of the prizes they assumed no joint liability, as the evidence admitted clearly showed. And the evidence offered did not tend to establish a joint liability. It did not, therefore, support the case made in the declaration, and was properly excluded from the jury. As the plaintiff asked no leave to amend, this ruling of the court is not a ground of error.

We find no error in the record.

Judgment affirmed.

COUNTY OF CHICOT *v.* LEWIS.

An act of the legislature of Arkansas, passed in 1868, authorizes any county to subscribe to the stock of any railroad company in that State, provided the subscription shall not exceed $100,000, and the consent of the inhabitants of the county thereto shall first be obtained at an election held for that purpose. At an election held under that act, the voters of a county voted to subscribe $100,000 to the stock of company A. and $100,000 to the stock of company B. *Held*, 1. That the act does not restrict the county to a single subscription. 2. That the power to subscribe is general, limited only by the subscription of $100,000 to the stock of any one company.

ERROR to the Circuit Court of the United States for the Eastern District of Arkansas.

The facts are stated in the opinion of the court.

Mr. U. M. Rose for the plaintiff in error.

Mr. Eben W. Kimball, contra.

MR. JUSTICE BRADLEY delivered the opinion of the court.

The legislature of Arkansas, in 1868, passed an act, the first and second sections of which are as follows: —

"SECT. 1. Be it enacted by the General Assembly of the State of Arkansas, that any county in this State may subscribe to the stock of any railroad in this State, now chartered or incorporated, or which shall hereafter be chartered or incorporated, under and in accordance with the laws of this State, and may issue bonds for the amount of such stock so subscribed, with coupons for interest thereto attached, under such limitations and restrictions, and upon such conditions as the county court may require, and the president and directors of such company may approve: *Provided*, that the amount of such subscription shall not exceed one hundred thousand dollars, and the consent of the inhabitants of such county to such subscription shall be first obtained in the manner hereinafter provided.

"SECT. 2. Whenever the president and directors of any such railroad shall make application to the county court of any county for such subscription by such county to its stock, specifying the amount to be subscribed and the condition of such subscription, and one hundred voters of the county shall petition the court for such purpose, it shall be the duty of the court immediately to order an election, to be holden at the place and in the manner other elections in such county are holden, for the purpose of determining whether such subscription shall be made, and at least twenty days' notice thereof shall be given in the manner provided by law for other elections, at which election those voting for such subscription shall have written or printed on their ballots or tickets the words 'for subscription' or 'against subscription,' and if a majority of the votes cast shall be in favor of subscription, the court shall cause such subscription to be made, and upon its acceptance by the company, shall cause bonds to be issued in conformity with such vote."

Under this act Chicot County subscribed $100,000 to the stock of the Mississippi, Ouachita, and Red River Railroad Company, and $100,000, to the stock of the Little Rock, Pine Bluff, and New Orleans Railroad Company, both subscriptions being made by virtue of a single election held by the voters of the county for that purpose. Bonds were issued for the amount of each subscription, $100,000 thereof payable to the Mississippi, Ouachita, and Red River Railroad Company, or bearer,

and $100,000 thereof payable to the Little Rock, Pine Bluff, and New Orleans Railroad Company, or bearer. Each bond contained the following recital: —

"This bond is one of a series numbered from one to two hundred, inclusively, of like date, tenor, and amount, issued under an act of the General Assembly of the State of Arkansas, entitled 'An act to authorize counties to subscribe stock in railroads,' approved July 23, 1868, and in obedience to a vote of the people of said county at an election held in accordance with the provisions of said act authorizing a subscription of one hundred thousand dollars to the capital stock of said railroad company."

And each bond was executed by the judge under the county seal, and attested by the county clerk.

The present suit was brought by the defendant in error to recover the amount of certain coupons, some of which were attached to bonds issued to one of the railroad companies, and some of them to bonds issued to the other company. The complaint alleged that the plaintiff was purchaser and *bona fide* owner of the coupons for value. The county put in a plea setting up the fact of a single election in reference to both subscriptions, and the amount of stock subscribed and bonds issued for each road. This plea being demurred to, the question was raised, whether the two subscriptions, amounting in the aggregate to $200,000, were *ultra vires* of the county under the proviso of the first section of the act. The court below sustained the demurrer and gave judgment for the plaintiff.

We do not well see how a different decision could have been made. The act did not restrict the county to a single subscription. Its language is, "Any county in this State may subscribe to the stock of any railroad in this State, . . . and may issue bonds for the amount, &c., provided that the amount of *such subscription* shall not exceed one hundred thousand dollars." That is, the power to subscribe is general, but no subscription shall exceed $100,000. The meaning might have been more distinctly expressed by using the plural, "any railroads," and making the proviso to read, "the amount of such subscriptions shall not exceed one hundred thousand dollars to any one railroad;" but the same sense is sufficiently indicated

by the words actually employed. The power given is a power to subscribe to any railroad. This includes all railroads in the State, without restriction. A subscription to one does not extinguish the power of subscribing to any other railroad: otherwise, a subscription of $1,000 to one railroad would exhaust the power; for the argument is based upon the idea that a single exercise of the power exhausts it and leaves the county *functus officio*. It may be said, that such a construction might lead to disastrous consequences by opening the door to subscriptions to a ruinous amount. But no subscription can be made without an election in favor of it. The law simply meant to give the county full liberty on the subject, limiting only the amount of a single subscription. That the limitation contained in the proviso has reference to a single subscription only is apparent from a bare reading of the context. Omitting surplus words, the section reads thus: "Any county in this State may subscribe to the stock of any railroad in this State, and issue bonds therefor; *provided* that the amount of *such subscription* [that is, the subscription to any railroad] shall not exceed one hundred thousand dollars." Here the words "any railroad" are used distributively, including all railroads taken severally; and the limitation has reference to the subscription to "any railroad," that is, to any one railroad taken separately. Had the legislature desired to limit the power of subscription to $100,000, the natural and appropriate mode of doing so would have been either to limit the county to one subscription not to exceed $100,000, or to provide that the amount of its subscriptions should not in the aggregate exceed $100,000. Neither of these things was done. As the law stands, it confers a general power to subscribe to the stock of any railroad in the State for any amount not exceeding $100,000.

This construction of the statute disposes of the case, and renders it unnecessary to consider the other point raised by the defendant in error; namely, that as a *bona fide* holder of the coupons he is not obliged to go behind the recital in the bonds to which they were attached, which amounted to a declaration by the county authority intrusted with the power to ascertain and determine the fact, that the bonds

were issued under the act, and in obedience to an election held in accordance with its provisions. Perhaps a criticism might be made upon this argument, that by comparing the two classes of bonds together it would appear from the several recitals that the county had issued more than $100,000 in amount.

We find no error in the record.

Judgment affirmed.

KILBOURN v. THOMPSON.

1. K., for refusing to answer certain questions put to him as a witness by the House of Representatives of the Congress of the United States, concerning the business of a real-estate partnership of which he was a member, and to produce certain books and papers in relation thereto, was, by an order of the House, imprisoned for forty-five days in the common jail of the District of Columbia. He brought suit to recover damages therefor against the sergeant-at-arms, who executed the order, and the members of the committee, who caused him to be brought before the House, where he was adjudged to be in contempt of its authority. *Held*, that, although the House can punish its own members for disorderly conduct, or for failure to attend its sessions, and can decide cases of contested elections and determine the qualifications of its members, and exercise the sole power of impeachment of officers of the government, and may, where the examination of witnesses is necessary to the performance of these duties, fine or imprison a contumacious witness, — there is not found in the Constitution of the United States any general power vested in either House to punish for contempt.
2. An examination of the history of the English Parliament and the decisions of the English courts shows that the power of the House of Commons, under the laws and customs of Parliament to punish for contempt, rests upon principles peculiar to it, and not upon any general rule applicable to all legislative bodies.
3. The Parliament of England, before its separation into two bodies, since known as the House of Lords and the House of Commons, was a high court of judicature, — the highest in the realm, — possessed of the general power incident to such a court of punishing for contempt. On its separation, the power remained with each body, because each was considered to be a court of judicature and exercised the functions of such a court.

4. Neither House of Congress was constituted a part of any court of general jurisdiction, nor has it any history to which the exercise of such power can be traced. Its power must be sought alone in some express grant in the Constitution, or be found necessary to carry into effect such powers as are there granted.
5. The court, without affirming that such a power can arise in any case other than those already specified, decides that it can exist in no case where the House, attempting to exercise it, invokes its aid in a matter to which its authority does not extend, such as an inquiry into the private affairs of the citizen.
6. The Constitution divides the powers of the government which it establishes into the three departments — the executive, the legislative, and the judicial — and unlimited power is conferred on no department or officer of the government. It is essential to the successful working of the system that the lines which separate those departments shall be clearly defined and closely followed, and that neither of them shall be permitted to encroach upon the powers exclusively confided to the others.
7. That instrument has marked out, in its three primary articles, the allotment of power to those departments, and no judicial power, except that above mentioned, is conferred on Congress or on either branch of it. On the contrary it declares that the judicial power of the United States shall be vested in one Supreme Court and such inferior courts as the Congress may from time to time ordain and establish.
8. The resolution of the House, under which K. was summoned and examined as a witness, directed its committee to examine into the history and character of what was called "the real-estate pool" of the District of Columbia; and the preamble recited, as the grounds of the investigation, that Jay Cooke & Co., who were debtors of the United States, and whose affairs were then in litigation before a bankruptcy court, had an interest in the pool or were creditors of it. The subject-matter of the investigation was judicial, and *not* legislative. It was then pending before the proper court, and there existed no power in Congress, or in either House thereof, on the allegation that an insolvent debtor of the United States was interested in a private business partnership, to investigate the affairs of that partnership, and consequently no authority to compel a witness to testify on the subject.
9. It follows that the order of the House, declaring K. guilty of a contempt of its authority, and ordering his imprisonment by the sergeant-at-arms, is void, and affords the latter no protection in an action by K. against him for false imprisonment.
10. *Anderson* v. *Dunn* (6 Wheat. 204) commented on, and some of the reasoning of the opinion overruled and rejected.
11. The provision of the Constitution, that, for any speech or debate in either House, the members shall not be questioned in any other place, exempts them from liability elsewhere for any vote, or report to or action in their respective Houses, as well as for oral debate. Therefore the plea of the members of the committee that they took no part in the actual arrest and imprisonment of K., and did nothing in relation thereto beyond the protection of their constitutional privilege, is, so far as they are concerned, a good defence to the action.

ERROR to the Supreme Court of the District of Columbia.

This is an action for false imprisonment brought by Hallett Kilbourn against John G. Thompson, Michael C. Kerr, John M. Glover, Jeptha D. New, Burwell P. Lewis, and A. Herr Smith. The declaration charges that the defendants with force and arms took the plaintiff from his house, and without any reasonable or probable cause, and against his will, confined him in the common jail of the District of Columbia for the period of forty-five days. The defendant Kerr died before process was served upon him.

Thompson pleaded first the general issue, and secondly a special plea, wherein he set forth that the plaintiff ought not to have or maintain his action, because that long before and at the said time when the force and injuries complained of by him are alleged to have been inflicted, and during all the time in the said declaration mentioned, a congress of the United States was holden at the city of Washington, in the District of Columbia, and was then and there, and during all the time aforesaid, assembled and sitting; that long before and at the time when said force and injuries are alleged to have occurred, and during all the time mentioned, he, the said Thompson, was, and yet is, sergeant-at-arms of the House of Representatives, and by virtue of his office, and by the tenor and effect of the standing rules and orders ordained and established by said House for the determining of the rules of its proceedings, and by the force and effect of the laws and customs of said House and of said Congress, was then and there duly authorized and required, amongst other things, to execute the command of said House, from time to time, together with all such process issued by authority thereof as shall be directed to him by its speaker; that long before and at the time aforementioned one Michael C. Kerr was the speaker of said House, and by virtue of his office, and by the tenor, force, and effect of said standing rules, orders, laws, and customs, was, among other things, duly authorized and required to subscribe with his proper hand, and to seal with the seal of said House, all writs, warrants, and subpœnas issued by its order; that long before and during said time one George M. Adams was the clerk of said House, authorized and required to attest and subscribe with his proper hand all writs,

warrants, and subpœnas issued by order of said House; that it was among other things ordained, established, and practised by and under such standing rules, orders, laws, and customs, that all writs, warrants, subpœnas, and other process issued by order of said House shall be under the hand of the speaker and seal of said House, and attested by said clerk; and so being under said hand and seal, and so attested, shall be executed pursuant to the tenor and effect of the same by the sergeant-at-arms; that said Kerr being such speaker, and said Adams such clerk, and the defendant such sergeant-at-arms, and while said Congress was in session, the House of Representatives on the twenty-fourth day of January, 1876, adopted the following preamble and resolution: —

"Whereas the government of the United States is a creditor of the firm of Jay Cooke & Co., now in bankruptcy by order and decree of the District Court of the United States in and for the Eastern District of Pennsylvania, resulting from the improvident deposits made by the Secretary of the Navy of the United States with the London branch of said house of Jay Cooke & Co. of the public moneys; and whereas a matter known as the real-estate pool was only partially inquired into by the late joint select committee to inquire into the affairs of the District of Columbia, in which Jay Cooke & Co. had a large and valuable interest; and whereas Edwin M. Lewis, trustee of the estate and effects of said firm of Jay Cooke & Co., has recently made a settlement of the interest of the estate of Jay Cooke & Co., with the associates of said firm of Jay Cooke & Co., to the disadvantage and loss, as it is alleged, of the numerous creditors of said estate, including the government of the United States; and whereas the courts are now powerless by reason of said settlement to afford adequate redress to said creditors:

"*Resolved*, that a special committee of five members of this House, to be selected by the speaker, be appointed to inquire into the matter and history of said real-estate pool and the character of said settlement, with the amount of property involved in which Jay Cooke & Co. were interested, and the amount paid or to be paid in said settlement, with power to send for persons and papers and report to this House."

That in pursuance and by authority of said resolution said speaker appointed John M. Glover, Jeptha D. New, Burwell

B. Lewis, A. Herr Smith, and Henry O. Pratt, who were members of the House of Representatives, to constitute said committee; and the said committee, so appointed, duly organized in the city of Washington, and proceeded to make the inquiry directed; that said committee, by the authority in them vested by said resolution, caused to be issued by the speaker, under his hand and the seal of the House of Representatives, and duly attested by the clerk, a subpœna to said Kilbourn, commanding him to appear before said committee to testify and be examined touching and in regard to the matter to be inquired into by said committee; that said Kilbourn was further commanded and ordered by said subpœna to bring with him certain designated and described records, papers, and maps relating to said inquiry; that subsequently to the issue of the subpœna and before the time when the force and injuries complained of are alleged to have been inflicted, Kilbourn, in obedience to the subpœna, appeared before the committee and was examined by it in relation to and in prosecution of said inquiry, and during his examination said Kilbourn was asked the following question: "Will you state where each of the five members reside, and will you please state their names?" which question was pertinent and material to the question of inquiry before the committee, but he knowingly and wilfully refused to answer the same; that he, although ordered and commanded by the subpœna to bring with him and produce before the said committee certain records, papers, and maps relating to said inquiry, still when asked by the said committee, "Mr. Kilbourn, are you now prepared to produce, in obedience to the *subpœna duces tecum*, the records which you have been required by the committee to produce?" knowingly and wilfully refused to produce them; that subsequently to these refusals, and before the time when the force and injuries complained of are alleged to have been inflicted, to wit, on the fourteenth day of March, 1876, the committee reported to the House, then sitting, the facts above stated, to wit, the resolution creating the committee, the appointment of the members on said committee by the speaker, the issuing of the *subpœna duces tecum* to said Kilbourn, his appearance before the committee, and his refusal to answer the questions, and his further refusal to produce said

records, papers, and maps, and the committee further reported to said House as follows: "The committee are of opinion and report that it is necessary for the efficient prosecution of the inquiry ordered by the House that the said Hallet Kilbourn should be required to respond to the *subpœna duces tecum* and answer the questions which he has refused to answer; and that there is no sufficient reason why the witness should not obey said *subpœna duces tecum* and answer the questions which he has refused to answer; and that his refusal as aforesaid is in contempt of this House," as by the journal, record, and proceedings, and report in the said House remaining, reference being thereto had, will more fully appear; that on March 14, 1876, it was, in and by the said House, for good and sufficient cause to the same appearing, resolved and ordered that the speaker should forthwith issue his warrant, directed to the sergeant-at-arms, commanding him to take into custody the body of the said Kilbourn wherever to be found, and the same to have forthwith before the said House, at the bar thereof, to then and there answer why he should not be punished as guilty of contempt of the dignity and authority of the same, and in the mean time to keep the said Kilbourn in his custody to await the further order of the said House. Whereupon such speaker, on the fourteenth day of March, 1876, did duly make and issue his certain warrant under his hand and the seal of the House of Representatives, and duly attested, directed to the defendant, as such sergeant-at-arms, reciting that the House of Representatives had that day ordered the speaker to issue his warrant directed to the sergeant-at-arms, commanding him to take into custody the body of the said Kilbourn wherever to be found, and the same forthwith to have before the said House, at the bar thereof, then and there to answer why he should not be punished for contempt, and in the mean time to be kept in his, the said defendant's, custody to await the further order of the House; therefore it was required in and by said warrant that the defendant, as such sergeant-at-arms as aforesaid, should take into his custody the body of said Kilbourn, and then forthwith to bring him before said House, at the bar thereof, then and there to answer to the charges aforesaid, and to be dealt with by said House according to the Constitution

and laws of the United States, and in the mean time to keep said Kilbourn in his custody to await the further order of said House; and the said Kerr, so being such speaker as aforesaid, then and there delivered said warrant to the defendant as sergeant-at-arms to be executed in due form of law; that by virtue and in execution of said warrant the defendant as such sergeant, in order to arrest said Kilbourn and convey him in custody to the bar of the House to answer to the charge aforesaid, and to be dealt with by said House according to the Constitution and laws of the United States, in obedience to the resolution and order aforesaid, and to the tenor and effect of the said warrant, went to said Kilbourn, and then and there gently laid his hands on him to arrest him, and did then and there arrest him by his body and take him into custody, and did then forthwith convey him to the bar of said House, as it was lawful for the defendant to do for the cause aforesaid; and thereupon such proceedings were had in and by said House, that said Kilbourn was then and there forthwith duly heard in his defence, and was duly examined by said House through its speaker, and was asked in said examination the following question, to wit, "Mr. Kilbourn, are you now prepared to answer, upon the demand of the proper committee of the House, where each of these five members reside?" (meaning the members of the pool), which question was pertinent and material to the question under inquiry; but said Kilbourn did knowingly and wilfully refuse to answer the question so asked; that said House, through its speaker, at the same time and place, asked said Kilbourn the further question, to wit, "Are you (meaning the said Kilbourn) prepared to produce, in obedience to the *subpœna duces tecum*, the records which you have been required by the committee to produce?" (which said records were pertinent and material to the question under inquiry), but he knowingly and wilfully declined and refused to produce them; that thereupon it was then and there resolved by said House as follows: —

"*Resolved*, that Hallet Kilbourn having been heard by the House pursuant to the order heretofore made requiring him to show cause why he should not answer questions propounded to him by a com-

mittee and respond to the *subpœna duces tecum* by obeying the same, and having failed to show sufficient cause why he should not answer said questions and obey said *subpœna duces tecum*, be, and is, therefore considered in contempt of said House because of said failure.

"*Resolved*, that in purging himself of the contempt for which Hallet Kilbourn is now in custody, the said Kilbourn shall be required to state to the House whether he is now willing to appear before the committee of the House to whom he has hitherto declined to obey a certain *subpœna duces tecum*, and to answer certain questions and obey said *subpœna duces tecum*, and answer said questions; and if he answers that he is ready to appear before said committee and obey said *subpœna duces tecum*, and answer said questions, then said witness shall have the privilege to so appear and obey and answer forthwith, or so soon as said committee can be convened, and that in the mean time the witness remain in custody; and in the event that said witness shall answer that he is not ready to so appear before said committee and obey said *subpœna duces tecum*, and make answer to said questions as aforesaid, then that said witness be recommitted to the said custody for the continuance of said contempt, and that such custody shall continue until the said witness shall communicate to this House through said committee that he is ready to appear before said committee and make such answer and obey said *subpœna duces tecum*; and that in executing this order the sergeant-at-arms shall cause the said Kilbourn to be kept in his custody in the common jail of the District of Columbia;"

as by the journal, record, and proceedings of the said resolutions and orders in the said House remaining, reference being thereto had, will more fully appear.

Whereupon said Kerr, so being such speaker, in pursuance of such standing rules and orders as aforesaid, and according to such laws and customs as aforesaid, and in execution of the order contained in said resolutions, did afterwards, to wit, on the fourteenth day of March, 1876, duly make and issue his certain warrant, directed to the defendant, as sergeant-at-arms, in the following words, to wit: —

"*Forty-fourth Congress, First Session, Congress of the United States.*

"IN THE HOUSE OF REPRESENTATIVES,
"March 4, 1876.

"To JOHN G. THOMPSON, Esq.,

"*Sergeant-at-Arms of the House of Representatives:*

"SIR, — The following resolution has this day been adopted by the House of Representatives:

"'*Resolved*, that in purging himself of the contempt for which Hallet Kilbourn is now in custody, the said Kilbourn shall be required to state to the House whether he is now willing to appear before a committee of this House, to whom he has hitherto declined to obey a certain *subpœna duces tecum* and answer certain questions, and obey said *subpœna duces tecum* and make answer to said questions, and if he answers that he is ready to appear before said committee and obey said *subpœna duces tecum* and answer said questions, then said witness shall have the privilege to so appear and obey and answer forthwith, or so soon as the committee can be convened, and that in the mean time the witness shall remain in custody; and in the event that said witness shall answer that he is not ready to so appear before said committee and obey said *subpœna duces tecum* and make answer to said questions as aforesaid, then that said witness be recommitted to the said custody for the continuance of such contempt, and that such custody shal' continue until the said witness shall communicate to this House, through said committee, that he is ready to appear before said committee and make such answer and obey said *subpœna duces tecum*; and that in executing this order the sergeant-at-arms shall cause the said Kilbourn to be kept in his custody in the common jail of the District of Columbia.'

"Now, therefore, you are hereby commanded to execute the same accordingly.

"In witness whereof I have hereunto set my hand and caused the seal of the House of Representatives to be affixed the day and year above written.

[SEAL.] "M. C. KERR, *Speaker*

"Attest:

"GEORGE M. ADAMS, *Clerk*."

That by virtue and in execution of said warrant, according to its tenor and effect, the defendant, as such sergeant-at-arms,

in order to arrest the said Kilbourn and convey him in custody to the common jail of the District of Columbia, in obedience to the resolutions and orders aforesaid, went to him and then and there gently laid his hands on him to arrest him, and did then and there arrest him by his body and take him into custody, and forthwith convey him to the common jail of the District of Columbia, and did keep him in custody therein until the eighteenth day of April, 1876, when and on which day, in response to a writ of *habeas corpus* issued by order of the Chief Justice of the Supreme Court of the District of Columbia, and directed to the defendant as sergeant-at-arms, requiring him to produce the body of Kilbourn before the said Chief Justice at the court-house in the city of Washington, in the District of Columbia; and by direction and order of the said House of Representatives the defendant, as sergeant-at-arms, conveyed the said Kilbourn in custody from the common jail of said District to said court-house, and then and there delivered him into the custody of the marshal for the District of Columbia, nor has he had said Kilbourn in his custody since said delivery to said marshal.

Which are the same several supposed trespasses complained of, and no other.

The other defendants pleaded jointly the general issue, and a plea of justification similar to that of the defendant Thompson, except that they alleged themselves to have been members of the House of Representatives, and of a committee of that House, and that what they did was in that capacity, and was warranted by the circumstances.

They also added the following: —

"And these defendants state, that they did not in any manner assist in the last-mentioned arrest and imprisonment of the said Kilbourn, nor were they in any way concerned in the same, nor did they order or direct the same, save and except by their votes in favor of the last above-mentioned resolutions and order commanding the speaker to issue his warrant for said arrest and imprisonment, and (save and except) by their participation as members in the introduction of and assent to said official acts and proceedings of said House, which these defendants did and performed as members of the said House of Represent-

atives in the due discharge of their duties as members of said House, and not otherwise.

"Which are the same several supposed trespasses whereof the said Kilbourn hath above in his said declaration complained against these defendants, and not other or different, with this, that these defendants do aver that the said Kilbourn, the now plaintiff, and the said Kilbourn in the said resolutions, orders, and warrants respectively mentioned, was and is one and the same person, and that at the said several times in this plea mentioned, and during all the time therein mentioned, the said Congress of the United States was assembled, and sitting, to wit, at Washington aforesaid, in the county aforesaid, and these defendants were and are members of the House of Representatives, one of the Houses of said Congress, and as such members, in said participation in the action of the House as above set forth, voted in favor of said resolutions and orders as above set forth, and saving and excepting said participation in the action of the House as set forth in the body of this plea, they had no concern or connection in any manner or way with said supposed trespasses complained of against them by the plaintiff; and this these defendants are ready to verify."

The plaintiff demurred to the special pleas of the defendants. The demurrer having been overruled and judgment rendered for the defendants, the plaintiff sued out this writ of error.

Mr. Charles A. Eldredge, *Mr. Enoch Totten*, and *Mr. Noah L. Jeffries*, for the plaintiff in error.

The power to punish a citizen for contempt is not in express terms or by implication conferred by the Constitution of the United States upon either House of Congress. Its assumption is in direct contravention of the Fourth and Fifth Amendments. *Ex parte Lange*, 18 Wall. 163; *Ex parte Milligan*, 4 id. 2; *United States* v. *Cruikshank*, 92 U. S. 542; *Loan Association* v. *Topeka*, 20 Wall. 655; Potter's Dwarris, 430; *Wilkinson* v. *Leland*, 2 Pet. 627; *Caller* v. *Bull*, 3 Dall. 386. It derives no support from the *lex parliamenti* of England, which was entirely distinct and separate from the jurisdiction of Westminster Hall. *King* v. *Flower*, 8 T. R. 314; *Brass*

Crosby's Case, 3 Wils. 188; *Regina* v. *Paty*, 2 Ld. Raym. 1105; *Burdett* v. *Abbott*, 14 East, 1; *Pennock* v. *Dialogue*, 2 Pet. 1; *Kirkpatrick* v. *Gibson*, 2 Brock. 388; *Floyde's Case*, 2 How. St. Tr. 1153; *Murray's Case*, 1 Wils. 299; *Bell's Case*, 59 Lords' Jour. 199, 206.

In England the power to punish for contempt is held not to be inherent in legislative assemblies or necessary to the proper discharge of their duties. *Kielley* v. *Carson*, 4 Moo. P. C. 63; *Fenton* v. *Hampton*, 11 id. 347; *Doyle* v. *Falconer*, Law Rep. 1 P. C. 328; *Stockdale* v. *Hansard*, 9 Ad. & E. 1.

In the first of these cases, the reasoning in *Dunn* v. *Anderson* (6 Wheat. 204), and the assertions of Mr. Justice Story in his Commentaries on the Constitution of the United States, are referred to with disapprobation. Conceding even that the House of Representatives may lawfully investigate the private affairs of a citizen, the proceeding by which the plaintiff was deprived of his liberty was illegal, and the warrant of the speaker void. Congress, by the act of Jan. 24, 1857, c. 19 (11 Stat. 155), as modified by sects. 102 and 104 of the Revised Statutes, prescribed a means for punishing a person who, having by the authority of either House of Congress been summoned as a witness to give testimony or produce papers upon any matter under inquiry before it, or one of its committees, wilfully makes default, or who, having appeared, refuses to answer any question pertinent to the question under inquiry. It is the duty of the presiding officer of that House to certify the fact of such refusal to the "district attorney for the District of Columbia," whose duty it shall be to bring the matter before the grand jury. No other than the prescribed punishment can be inflicted. *Haney* v. *State*, 5 Wis. 529; *Scringrour* v. *State*, 1 Chand. (Wis.) 48. This is true in matters of contempt. *Bickley* v. *Commonwealth*, 2 J. J. Marsh. (Ky.) 572; *Ex parte Edwards*, 11 Fla. 174; *Dunham* v. *State*, 6 Iowa, 245; *People* v. *Liscomb*, 60 N. Y. 559. Double penalties cannot be inflicted. *Driskill* v. *Parrish*, 3 McLean, 631; *City of Brooklyn* v. *Toynbee*, 31 Barb. (N. Y.) 282; *Sipperly* v. *Railroad Company*, 9 How. (N. Y.) Pr. 83; *Washburn* v. *McInroy*, 7 Johns. (N. Y.) 134; *Tiffany* v. *Driggs*, 13 id. 252.

Because, as a punishment, the law has denounced a loss of

two of the rights of citizenship, it does not follow that a third right is to be withheld from the delinquent. Indeed, the reverse result is the reasonable deduction, because it is clear on common principles that no penalty for crime can be inflicted except that which is expressly prescribed. The fact that several penal consequences are annexed by statute to the commission of a breach of law cannot warrant the aggravation, by the judicial hand, of the punishment prescribed. *The State* v. *Pritchard*, 12 Am. Law Reg. N. S. 518, *Ex parte Lange*, 18 Wall. 163; *Rex* v. *Wright*, 1 Burr. 543, *State* v. *Bishop*, 7 Conn. 181; *Respublica* v. *De Longchamps*, 1 Dall. 111; *Emery's Case*, 107 Mass. 172; *State* v. *Egglesht*, 41 Iowa, 574.

Mr. Walter H. Smith and *Mr. Frank H. Hurd, contra.*

The House of Representatives has power to arrest and commit persons guilty of a contempt of its authority. *Anderson* v *Dunn*, 6 Wheat. 204; *Wickelhausen* v. *Willett*, 10 Abb. (N. Y.) Pr. 164; *Yates* v. *Lansing*, 9 Johns. (N. Y.) 395; *Hiss* v. *Bartlett*, 3 Gray (Mass.), 468; *Johnston* v. *Commonwealth*, 1 Bibb (Ky.), 598; 1 Kent, Com. 236; Story, Const., sects. 845, 849; Rawle, Const. 254; Sergeant, Const. Law, 534.

The same doctrine is held by the English courts as applicable to the House of Commons. *Burdett* v. *Abbott*, 14 East, 1; *Beaumont* v. *Barrett*, 1 Moo. P. C. 59; *Howard* v. *Gossett*, 10 Ad. & E. N. S. 359.

The decision of the House as to the fact of contempt is conclusive, and cannot be collaterally impeached. *Anderson* v. *Dunn*, *supra*; *Howard* v. *Gossett*, *supra*; *Burdett* v. *Abbott*, *supra*; *Ex parte Kearney*, 7 Wheat. 38; *Stockdale* v. *Hansard*, 9 Ad. & E. 1; *Case of the Sheriff of Middlesex*, 11 id. 273.

With the exception of Thompson, the defendants took no part in the proceedings against the plaintiff other than by making their report to the House and there voting, as members, in support of the resolutions. For what they there did they are protected against being "questioned in any other place."

Thompson acted under the warrant of the speaker. As an officer of the House, he was charged with the duty of executing its commands, and the law affords him complete protection.

Erskine v. *Hornbach*, 14 Wall. 613; *Savacool* v. *Boughton*, 5 Wend. (N. Y.) 170; *Earl* v. *Camp*, 16 id. 562; *Chegaray* v. *Jenkins*, 5 N. Y. 376; *Sprague* v. *Birchard*, 1 Wis. 457.

The authorities cited by the plaintiff in error do not sustain his position that the Revised Statutes having made provision for the punishment of a recusant witness, he cannot be otherwise punished.

The uniform current of authority is the other way. *Rex* v. *Ossulston*, 2 Stra. 1107; *King* v. *Pierson*, Andr. 310; *State* v. *Yancy*, Law Repos. (N. C.) 519; *State* v. *Woodfin*, 5 Ired. (N. C.) L. 199; *State* v. *Williams*, 2 Spears (S. C.), 26; *Ex parte Brounsall*, 2 Cowp. 829; *Vertner* v. *Martin*, 18 Miss. 103; *Foster* v. *Commonwealth*, 8 Watts & S. (Pa.) 77; *In re King*, 8 Q. B. 129; *In re Wright*, 1 Exch. 658; *Regina* v. *Martin*, 5 Cox, C. C. 356; *People* v. *Stevens*, 13 Wend. (N. Y.) 341; *Levy* v. *The State*, 6 Ind. 281; *Ambrose* v. *State*, id. 351; *Phillips* v. *People*, 55 Ill. 429; *Moore* v. *People*, 14 How. 13; 2 Bishop, Cr. Law, sect. 264.

MR. JUSTICE MILLER, after stating the case, delivered the opinion of the court.

The argument before us has assumed a very wide range, and includes the discussion of almost every suggestion that can well be conceived on the subject. The two extremes of the controversy are, the proposition on the part of the plaintiff, that the House of Representatives has no power whatever to punish for a contempt of its authority; and on the part of defendants, that such power undoubtedly exists, and when that body has formally exercised it, it must be presumed that it was rightfully exercised.

This latter proposition assumes the form of expression sometimes used with reference to courts of justice of general jurisdiction, that having the power to punish for contempts, the judgment of the House that a person is guilty of such contempt is conclusive everywhere.

Conceding for the sake of the argument that there are cases in which one of the two bodies, that constitute the Congress of the United States, may punish for contempt of its authority, or disregard of its orders, it will scarcely be contended by the

most ardent advocate of their power in that respect that it is unlimited.

The powers of Congress itself, when acting through the concurrence of both branches, are dependent solely on the Constitution. Such as are not conferred by that instrument, either expressly or by fair implication from what is granted, are "reserved to the States respectively, or to the people." Of course, neither branch of Congress, when acting separately, can lawfully exercise more power than is conferred by the Constitution on the whole body, except in the few instances where authority is conferred on either House separately, as in the case of impeachments. No general power of inflicting punishment by the Congress of the United States is found in that instrument. It contains in the provision that no "person shall be deprived of life, liberty, or property, without due process of law," the strongest implication against punishment by order of the legislative body. It has been repeatedly decided by this court, and by others of the highest authority, that this means a trial in which the rights of the party shall be decided by a tribunal appointed by law, which tribunal is to be governed by rules of law previously established. An act of Congress which proposed to adjudge a man guilty of a crime and inflict the punishment, would be conceded by all thinking men to be unauthorized by anything in the Constitution. That instrument, however, is not wholly silent as to the authority of the separate branches of Congress to inflict punishment. It authorizes each House to punish its own members. By the second clause of the fifth section of the first article, "Each House may determine the rules of its proceedings, punish its members for disorderly behavior, and, with the concurrence of two-thirds, expel a member," and by the clause immediately preceding, it "may be authorized to compel the attendance of absent members, in such manner and under such penalties as each House may provide." These provisions are equally instructive in what they authorize and in what they do not authorize. There is no express power in that instrument conferred on either House of Congress to punish for contempts.

The advocates of this power have, therefore, resorted to an

implication of its existence, founded on two principal arguments. These are, 1, its exercise by the House of Commons of England, from which country we, it is said, have derived our system of parliamentary law; and, 2d, the necessity of such a power to enable the two Houses of Congress to perform the duties and exercise the powers which the Constitution has conferred on them.

That the power to punish for contempt has been exercised by the House of Commons in numerous instances is well known to the general student of history, and is authenticated by the rolls of the Parliament. And there is no question but that this has been upheld by the courts of Westminster Hall. Among the most notable of these latter cases are the judgments of the Court of King's Bench, in *Brass Crosby's Case* (3 Wils. 188), decided in the year 1771; *Burdett* v. *Abbott* (14 East, 1), in 1811, in which the opinion was delivered by Lord Ellenborough; and *Case of the Sheriff of Middlesex* (11 Ad. & E. 273), in 1840. Opinion by Lord Denman, Chief Justice.

It is important, however, to understand on what principle this power in the House of Commons rests, that we may see whether it is applicable to the two Houses of Congress, and, if it be, whether there are limitations to its exercise.

While there is, in the adjudged cases in the English courts, little agreement of opinion as to the extent of this power, and the liability of its exercise to be inquired into by the courts, there is no difference of opinion as to its origin. This goes back to the period when the bishops, the lords, and the knights and burgesses met in one body, and were, when so assembled, called the High Court of Parliament.

They were not only called so, but the assembled Parliament exercised the highest functions of a court of judicature, representing in that respect the judicial authority of the king in his Court of Parliament. While this body enacted laws, it also rendered judgments in matters of private right, which, when approved by the king, were recognized as valid. Upon the separation of the Lords and Commons into two separate bodies, holding their sessions in different chambers, and hence called the House of Lords and the House of Commons, the judicial

function of reviewing by appeal the decisions of the courts of Westminster Hall passed to the House of Lords, where it has been exercised without dispute ever since. To the Commons was left the power of impeachment, and, perhaps, others of a judicial character, and jointly they exercised, until a very recent period, the power of passing bills of attainder for treason and other high crimes which are in their nature punishment for crime declared judicially by the High Court of Parliament of the Kingdom of England.

It is upon this idea that the two Houses of Parliament were each courts of judicature originally, which, though divested by usage, and by statute, probably, of many of their judicial functions, have yet retained so much of that power as enables them, like any other court, to punish for a contempt of these privileges and authority that the power rests.

In the case of *Burdett* v. *Abbott*, already referred to as sustaining this power in the Commons, Mr. Justice Bailey said, in support of the judgment of the Court of King's Bench: "In an early authority upon that subject, in Lord Coke, 4 Inst. 23, it is expressly laid down that the House of Commons has not only a legislative character and authority, but is also a court of judicature; and there are instances put there in which the power of committing to prison for contempts has been exercised by the House of Commons, and this, too, in cases of libel. If then, the House be a court of judicature, it must, as is in a degree admitted by the plaintiff's counsel, have the power of supporting its own dignity as essential to itself; and without power of commitment for contempts it could not support its dignity." In the opinion of Lord Ellenborough in the same case, after stating that the separation of the two Houses of Parliament seems to have taken place as early as the 49 Henry III., about the time of the battle of Evesham, he says the separation was probably effected by a formal act for that purpose by the king and Parliament. He then adds: "The privileges which have since been enjoyed, and the functions which have been since uniformly exercised by each branch of the legislature, with the knowledge and acquiescence of the other House and of the king, must be presumed to be the privileges and functions which then, that is, at the very period of

their original separation, were statutably assigned to each." He then asks, "Can the High Court of Parliament, or either of the two Houses of which it consists, be deemed not to possess intrinsically that authority of punishing summarily for contempts, which is acknowledged to belong, and is daily exercised as belonging, to every superior court of law, of less dignity undoubtedly than itself?" This power is here distinctly placed on the ground of the judicial character of Parliament, which is compared in that respect with the other courts of superior jurisdiction, and is said to be of a dignity higher than they.

In the earlier case of Crosby, Lord Mayor of London, De Gray, Chief Justice, speaking of the House of Commons, which had committed the lord mayor to the Tower of London for having arrested by judicial process one of its messengers, says: "Such an assembly must certainly have such authority, and it is legal because necessary. Lord Coke says they have a judicial power; each member has a judicial seat in the House; he speaks of matters of judicature of the House of Commons." Mr. Justice Blackstone, in concurring in the judgment, said: "The House of Commons is a Supreme Court, and they are judges of their own privileges and contempts, more especially with respect to their own members." Mr. Justice Gould also laid stress upon the fact that the "House of Commons may be properly called judges," and cites 4 Coke's Inst. 47, to show that "an alien cannot be elected to Parliament, *because such a person can hold no place of judicature.*"

In the celebrated case of *Stockdale* v. *Hansard* (9 Ad. & E. 1), decided in 1839, this doctrine of the omnipotence of the House of Commons in the assertion of its privileges received its first serious check in a court of law. The House of Commons had ordered the printing and publishing of a report of one of its committees, which was done by Hansard, the official printer of the body. This report contained matter on which Stockdale sued Hansard for libel. Hansard pleaded the privilege of the House, under whose orders he acted, and the question on demurrer was, assuming the matter published to be libellous in its character, did the order of the House protect the publication?

Sir John Campbell, Attorney-General, in an exhaustive argument in defence of the prerogative of the House, bases it upon two principal propositions; namely, that the House of Commons is a court of judicature, possessing the same right to punish for contempt that other courts have, and that its powers and privileges rest upon the *lex parliamenti*,—the laws and customs of Parliament. These, he says, and cites authorities to show it, are unknown to the judges and lawyers of the common-law courts, and rest exclusively in the knowledge and memory of the members of the two Houses. He argues, therefore, that their judgments and orders on matters pertaining to these privileges are conclusive, and cannot be disputed or reviewed by the ordinary courts of judicature.

Lord Denman, in a masterly opinion, concurred in by the other judges of the King's Bench, ridicules the idea of the existence of a body of laws and customs of Parliament unknown and unknowable to anybody else but the members of the two Houses, and holds with an incontrovertible logic that when the rights of the citizen are at stake in a court of justice, it must, if these privileges are set up to his prejudice, examine for itself into the nature and character of those laws, and decide upon their extent and effect upon the rights of the parties before the court. While admitting, as he does in *Case of the Sheriff of Middlesex* (11 Ad. & E. 273), that when a person is committed by the House of Commons for a contempt in regard to a matter of which that House had jurisdiction, no other court can relieve the party from the punishment which it may lawfully inflict, he holds that the question of the jurisdiction of the House is always open to the inquiry of the courts in a case where that question is properly presented.

But perhaps the most satisfactory discussion of this subject, as applicable to the proposition that the two Houses of Congress are invested with the same power of punishing for contempt, and with the same peculiar privileges, and the same power of enforcing them, which belonged by ancient usage to the Houses of the English Parliament, is to be found in some recent decisions of the Privy Council. That body is by its constitution vested with authority to hear and decide appeals from the courts of the provinces and colonies of the kingdom.

The leading case is that of *Kielley* v. *Carson and Others* (4 Moo. P. C. 63), decided in 1841. There were present at the hearing Lord Chancellor Lyndhurst, Lord Brougham, Lord Denman, Lord Abinger, Lord Cottenham, Lord Campbell, Vice-Chancellor Shadwell, the Chief Justice of the Common Pleas, Mr. Justice Erskine, Dr. Lushington, and Mr. Baron Parke, who delivered the opinion, which seems to have received the concurrence of all the eminent judges named.

Measuring the weight of its authority by the reputation of the judges who sat in the case and agreed to the opinion, it would be difficult to find one more entitled on that score to be received as conclusive on the points which it decided.

The case was an appeal from the Supreme Court of Judicature of Newfoundland. John Kent, one of the members of the House of Assembly of that island, reported to that body that Kielley, the appellant, had been guilty of a contempt of the privileges of the House in using towards him reproaches, in gross and threatening language, for observations made by Kent in the House; adding, "Your privilege shall not protect you." Kielley was brought before the House, and added to his offence by boisterous and violent language, and was finally committed to jail under an order of the House and the warrant of the speaker. The appellant sued Carson, the speaker, Kent, and other members, and Walsh, the messenger, who pleaded the facts above stated, and relied on the authority of the House as sufficient protection. The judgment of the court of Newfoundland was for the defendants, holding the plea good.

This judgment was supported in argument before the Privy Council on the ground that the Legislative Assembly of Newfoundland had the same parliamentary rights and privileges which belonged by usage to the Parliament of England, and that, if this were not so, it was a necessary incident to every body exercising legislative functions to punish for contempt of its authority. The case was twice argued in the Privy Council, on which its previous judgment in the case of *Beaumont* v. *Barrett* (1 Moo. P. C. 59) was much urged, in which both those propositions had been asserted in the opinion of Mr. Baron Parke. Referring to that case as an authority for the proposition that the power to punish for a contempt was inci-

dent to every legislative body, the opinion of Mr. Baron Parke in the later case uses this language: "There is no decision of a court of justice, nor other authority, in favor of the right, except that of the case of *Beaumont* v. *Barrett*, decided by the Judicial Committee, the members present being Lord Brougham, Mr. Justice Bosanquet, Mr. Justice Erskine, and myself. Their Lordships do not consider that case as one by which they ought to be bound on deciding the present question. The opinion of their Lordships, delivered by myself immediately after the argument was closed, though it clearly expressed that the power was incidental to every legislative assembly, was not the only ground on which that judgment was rested, and therefore was, in some degree, extra-judicial; but besides, it was stated to be and was founded entirely on the *dictum* of Lord Ellenborough in *Burdett* v. *Abbott*, which *dictum*, we all think, cannot be taken as authority for the abstract proposition that every legislative body has the power of committing for contempt. The observation was made by his Lordship with reference to the peculiar powers of Parliament, and ought not, we all think, to be extended any further. We all, therefore, think that the opinion expressed by myself in the case of *Beaumont* v. *Barrett* ought not to affect our decision in the present case, and, there being no other authority on the subject, we decide according to the principle of the common law, that the House of Assembly have not the power contended for. They are a local legislature, with every power reasonably necessary for the exercise of their functions and duties, but they have not what they erroneously supposed themselves to possess, — the same exclusive privileges which the ancient law of England has annexed to the House of Parliament." In another part of the opinion the subject is thus disposed of: "It is said, however, that this power belongs to the House of Commons in England; and this, it is contended, affords an authority for holding that it belongs, as a legal incident by the common law, to an assembly with analogous functions. But the reason why the House of Commons has this power is not because it is a representative body with legislative functions, but by virtue of ancient usage and prescription; the *lex et consuetudo parliamenti*, which forms a part of the common law of the land, and according to which

the High Court of Parliament before its division, and the Houses of Lords and Commons since, are invested with many privileges, that of punishment for contempt being one." The opinion also discusses at length the necessity of this power in a legislative body for its protection, and to enable it to discharge its law-making functions, and decides against the proposition. But the case before us does not require us to go so far, as we have cited it to show that the powers and privileges of the House of Commons of England, on the subject of punishment for contempts, rest on principles which have no application to other legislative bodies, and certainly can have none to the House of Representatives of the United States, — a body which is in no sense a court, which exercises no functions derived from its once having been a part of the highest court of the realm, and whose functions, so far as they partake in any degree of that character, are limited to punishing its own members and determining their election. The case, however, which we have just been considering, was followed in the same body by *Fenton* v. *Hampton* (11 Moo. P. C. 347) and *Doyle* v. *Falconer* (Law Rep. 1 P. C. 328), in both of which, on appeals from other provinces of the kingdom, the doctrine of the case of *Kielley* v. *Carson and Others* is fully reaffirmed.

We are of opinion that the right of the House of Representatives to punish the citizen for a contempt of its authority or a breach of its privileges can derive no support from the precedents and practices of the two Houses of the English Parliament, nor from the adjudged cases in which the English courts have upheld these practices. Nor, taking what has fallen from the English judges, and especially the later cases on which we have just commented, is much aid given to the doctrine, that this power exists as one necessary to enable either House of Congress to exercise successfully their function of legislation.

This latter proposition is one which we do not propose to decide in the present case, because we are able to decide it without passing upon the existence or non-existence of such a power in aid of the legislative function.

As we have already said, the Constitution expressly empowers each House to punish its own members for disorderly behavior. We see no reason to doubt that this punishment

may in a proper case be imprisonment, and that it may be for refusal to obey some rule on that subject made by the House for the preservation of order.

So, also, the penalty which each House is authorized to inflict in order to compel the attendance of absent members may be imprisonment, and this may be for a violation of some order or standing rule on that subject.

Each House is by the Constitution made the judge of the election and qualification of its members. In deciding on these it has an undoubted right to examine witnesses and inspect papers, subject to the usual rights of witnesses in such cases; and it may be that a witness would be subject to like punishment at the hands of the body engaged in trying a contested election, for refusing to testify, that he would if the case were pending before a court of judicature.

The House of Representatives has the sole right to impeach officers of the government, and the Senate to try them. Where the question of such impeachment is before either body acting in its appropriate sphere on that subject, we see no reason to doubt the right to compel the attendance of witnesses, and their answer to proper questions, in the same manner and by the use of the same means that courts of justice can in like cases.

Whether the power of punishment in either House by fine or imprisonment goes beyond this or not, we are sure that no person can be punished for contumacy as a witness before either House, unless his testimony is required in a matter into which that House has jurisdiction to inquire, and we feel equally sure that neither of these bodies possesses the general power of making inquiry into the private affairs of the citizen.

It is believed to be one of the chief merits of the American system of written constitutional law, that all the powers intrusted to government, whether State or national, are divided into the three grand departments, the executive, the legislative, and the judicial. That the functions appropriate to each of these branches of government shall be vested in a separate body of public servants, and that the perfection of the system requires that the lines which separate and divide these depart-

ments shall be broadly and clearly defined. It is also essential to the successful working of this system that the persons intrusted with power in any one of these branches shall not be permitted to encroach upon the powers confided to the others, but that each shall by the law of its creation be limited to the exercise of the powers appropriate to its own department and no other. To these general propositions there are in the Constitution of the United States some important exceptions. One of these is, that the President is so far made a part of the legislative power, that his assent is required to the enactment of all statutes and resolutions of Congress.

This, however, is so only to a limited extent, for a bill may become a law notwithstanding the refusal of the President to approve it, by a vote of two-thirds of each House of Congress.

So, also, the Senate is made a partaker in the functions of appointing officers and making treaties, which are supposed to be properly executive, by requiring its consent to the appointment of such officers and the ratification of treaties. The Senate also exercises the judicial power of trying impeachments, and the House of preferring articles of impeachment.

In the main, however, that instrument, the model on which are constructed the fundamental laws of the States, has blocked out with singular precision, and in bold lines, in its three primary articles, the allotment of power to the executive, the legislative, and the judicial departments of the government. It also remains true, as a general rule, that the powers confided by the Constitution to one of these departments cannot be exercised by another.

It may be said that these are truisms which need no repetition here to give them force. But while the experience of almost a century has in general shown a wise and commendable forbearance in each of these branches from encroachments upon the others, it is not to be denied that such attempts have been made, and it is believed not always without success. The increase in the number of States, in their population and wealth, and in the amount of power, if not in its nature to be exercised by the Federal government, presents powerful and growing temptations to those to whom that exercise is in-

trusted, to overstep the just boundaries of their own department, and enter upon the domain of one of the others, or to assume powers not intrusted to either of them.

The House of Representatives having the exclusive right to originate all bills for raising revenue, whether by taxation or otherwise; having with the Senate the right to declare war, and fix the compensation of all officers and servants of the government, and vote the supplies which must pay that compensation; and being also the most numerous body of all those engaged in the exercise of the primary powers of the government, — is for these reasons least of all liable to encroachments upon its appropriate domain.

By reason, also, of its popular origin, and the frequency with which the short term of office of its members requires the renewal of their authority at the hands of the people, — the great source of all power in this country, — encroachments by that body on the domain of co-ordinate branches of the government would be received with less distrust than a similar exercise of unwarranted power by any other department of the government. It is all the more necessary, therefore, that the exercise of power by this body, when acting separately from and independently of all other depositaries of power, should be watched with vigilance, and when called in question before any other tribunal having the right to pass upon it that it should receive the most careful scrutiny.

In looking to the preamble and resolution under which the committee acted, before which Kilbourn refused to testify, we are of opinion that the House of Representatives not only exceeded the limit of its own authority, but assumed a power which could only be properly exercised by another branch of the government, because it was in its nature clearly judicial.

The Constitution declares that the judicial power of the United States shall be vested in one Supreme Court, and in such inferior courts as the Congress may from time to time ordain and establish. If what we have said of the division of the powers of the government among the three departments be sound, this is equivalent to a declaration that no judicial power is vested in the Congress or either branch of it, save in the cases

specifically enumerated to which we have referred. If the investigation which the committee was directed to make was judicial in its character, and could only be properly and successfully made by a court of justice, and if it related to a matter wherein relief or redress could be had only by a judicial proceeding, we do not, after what has been said, deem it necessary to discuss the proposition that the power attempted to be exercised was one confided by the Constitution to the judicial and not to the legislative department of the government. We think it equally clear that the power asserted is judicial and not legislative.

The preamble to the resolution recites that the government of the United States is a creditor of Jay Cooke & Co., then in bankruptcy in the District Court of the United States for the Eastern District of Pennsylvania.

If the United States is a creditor of any citizen, or of any one else on whom process can be served, the usual, the only legal mode of enforcing payment of the debt is by a resort to a court of justice. For this purpose, among others, Congress has created courts of the United States, and officers have been appointed to prosecute the pleas of the government in these courts.

The District Court for the Eastern District of Pennsylvania is one of them, and, according to the recital of the preamble, had taken jurisdiction of the subject-matter of Jay Cooke & Co.'s indebtedness to the United States, and had the whole subject before it for action at the time the proceeding in Congress was initiated. That this indebtedness resulted, as the preamble states, from the improvidence of a secretary of the navy does not change the nature of the suit in the court nor vary the remedies by which the debt is to be recovered. If, indeed, any purpose had been avowed to impeach the secretary, the whole aspect of the case would have been changed. But no such purpose is disclosed. None can be inferred from the preamble, and the characterization of the conduct of the secretary by the term "improvident," and the absence of any words implying suspicion of criminality repel the idea of such purpose, for the secretary could only be impeached for "high crimes and misdemeanors."

The preamble then refers to "the real-estate pool," in which it is said Jay Cooke & Co. had a large interest, as something well known and understood, and which had been the subject of a partial investigation by the previous Congress, and alleges that the trustee in bankruptcy of Jay Cooke & Co. had made a settlement of the interest of Jay Cooke & Co. with the associates of the firm of Jay Cooke & Co., to the disadvantage and loss of their numerous creditors, including the government of the United States, by reason of which the courts are powerless to afford adequate redress to said creditors.

Several very pertinent inquiries suggest themselves as arising out of this short preamble.

How could the House of Representatives know, until it had been fairly tried, that the courts were powerless to redress the creditors of Jay Cooke & Co.? The matter was still pending in a court, and what right had the Congress of the United States to interfere with a suit pending in a court of competent jurisdiction? Again, what inadequacy of power existed in the court, or, as the preamble assumes, in all courts, to give redress which could lawfully be supplied by an investigation by a committee of one House of Congress, or by any act or resolution of Congress on the subject? The case being one of a judicial nature, for which the power of the courts usually afford the only remedy, it may well be supposed that those powers were more appropriate and more efficient in aid of such relief than the powers which belong to a body whose function is exclusively legislative. If the settlement to which the preamble refers as the principal reason why the courts are rendered powerless was obtained by fraud, or was without authority, or for any conceivable reason could be set aside or avoided, it should be done by some appropriate proceeding in the court which had the whole matter before it, and which had all the power in that case proper to be intrusted to any body, and not by Congress or by any power to be conferred on a committee of one of the two Houses.

The resolution adopted as a sequence of this preamble contains no hint of any intention of final action by Congress on the subject. In all the argument of the case no suggestion has been made of what the House of Representatives or the Con-

gress could have done in the way of remedying the wrong or securing the creditors of Jay Cooke & Co., or even the United States. Was it to be simply a fruitless investigation into the personal affairs of individuals? If so, the House of Representatives had no power or authority in the matter more than any other equal number of gentlemen interested for the government of their country. By "fruitless" we mean that it could result in no valid legislation on the subject to which the inquiry referred.

What was this committee charged to do?

To inquire into the nature and history of the real-estate pool. How indefinite! What was the real-estate pool? Is it charged with any crime or offence? If so, the courts alone can punish the members of it. Is it charged with a fraud against the government? Here, again, the courts, and they alone, can afford a remedy. Was it a corporation whose powers Congress could repeal? There is no suggestion of the kind. The word "pool," in the sense here used, is of modern date, and may not be well understood, but in this case it can mean no more than that certain individuals are engaged in dealing in real estate as a commodity of traffic; and the *gravamen* of the whole proceeding is that a debtor of the United States may be found to have an interest in the pool. Can the rights of the pool, or of its members, and the rights of the debtor, and of the creditor of the debtor, be determined by the report of a committee or by an act of Congress? If they cannot, what authority has the House to enter upon this investigation into the private affairs of individuals who hold no office under the government.

The Court of Exchequer of England was originally organized solely to entertain suits of the king against the debtors of the crown. But after a while, when the other courts of Westminster Hall became overcrowded with business, and it became desirable to open the Court of Exchequer to the general administration of justice, a party was allowed to bring any common-law action in that court, on an allegation that the plaintiff was debtor to the king, and the recovery in the action would enable him to respond to the king's debt. After a while the court refused to allow this allegation to be controverted, and so, by this fiction, the court came from a very limited to be one

of general jurisdiction. Such an enlargement of jurisdiction would not now be tolerated in England, and it is hoped not in this country of written constitutions and laws; but it looks very like it when, upon the allegation that the United States is a creditor of a man who has an interest in some other man's business, the affairs of the latter can be subjected to the unlimited scrutiny or investigation of a congressional committee.

We are of opinion, for these reasons, that the resolution of the House of Representatives authorizing the investigation was in excess of the power conferred on that body by the Constitution; that the committee, therefore, had no lawful authority to require Kilbourn to testify as a witness beyond what he voluntarily chose to tell; that the orders and resolutions of the House, and the warrant of the speaker, under which Kilbourn was imprisoned, are, in like manner, void for want of jurisdiction in that body, and that his imprisonment was without any lawful authority.

At this point of the inquiry we are met by *Anderson* v. *Dunn* (6 Wheat. 204), which in many respects is analogous to the case now under consideration. Anderson sued Dunn for false imprisonment, and Dunn justified under a warrant of the House of Representatives directed to him as sergeant-at-arms of that body. The warrant recited that Anderson had been found by the House "guilty of a breach of the privileges of the House, and of a high contempt of the dignity and authority of the same." The warrant directed the sergeant-at-arms to bring him before the House, when, by its order, he was reprimanded by the speaker. Neither the warrant nor the plea described or gave any clew to the nature of the act which was held by the House to be a contempt. Nor can it be clearly ascertained from the report of the case what it was, though a slight inference may be derived from something in one of the arguments of counsel, that it was an attempt to bribe a member.

But, however that may be, the defence of the sergeant-at-arms rested on the broad ground that the House, having found the plaintiff guilty of a contempt, and the speaker, under the order of the House, having issued a warrant for his arrest, that

alone was sufficient authority for the defendant to take him into custody, and this court held the plea good.

It may be said that since the order of the House, and the warrant of the speaker, and the plea of the sergeant-at-arms, do not disclose the ground on which the plaintiff was held guilty of a contempt, but state the finding of the House in general terms as a judgment of guilty, and as the court placed its decision on the ground that such a judgment was conclusive in the action against the officer who executed the warrant, it is no precedent for a case where the plea establishes, as we have shown it does in this case by its recital of the facts, that the House has exceeded its authority.

This is, in fact, a substantial difference. But the court in its reasoning goes beyond this, and though the grounds of the decision are not very clearly stated, we take them to be: that there is in some cases a power in each House of Congress to punish for contempt; that this power is analogous to that exercised by courts of justice, and that it being the well-established doctrine that when it appears that a prisoner is held under the order of a court of general jurisdiction for a contempt of its authority, no other court will discharge the prisoner or make further inquiry into the cause of his commitment. That this is the general rule, though somewhat modified since that case was decided, as regards the relations of one court to another, must be conceded.

But we do not concede that the Houses of Congress possess this general power of punishing for contempt. The cases in which they can do this are very limited, as we have already attempted to show. If they are proceeding in a matter beyond their legitimate cognizance, we are of opinion that this can be shown, and we cannot give our assent to the principle that, by the mere act of asserting a person to be guilty of a contempt, they thereby establish their right to fine and imprison him, beyond the power of any court or any other tribunal whatever to inquire into the grounds on which the order was made. This necessarily grows out of the nature of an authority which can only exist in a limited class of cases, or under special circumstances; otherwise the limitation is unavailing and the power omnipotent. The tendency of modern decisions every-

where is to the doctrine that the jurisdiction of a court or other tribunal to render a judgment affecting individual rights, is always open to inquiry, when the judgment is relied on in any other proceeding. See *Williamson* v. *Berry*, 8 How. 495; *Thompson* v. *Whitman*, 18 Wall. 457; *Knowles* v. *The Gas-Light & Coke Co.*, 19 id. 58; *Pennoyer* v. *Neff*, 95 U. S. 714.

The case of *Anderson* v. *Dunn* was decided before the case of *Stockdale* v. *Hansard*, and the more recent cases in the Privy Council to which we have referred. It was decided as a case of the first impression in this court, and undoubtedly under pressure of the strong rulings of the English courts in favor of the privileges of the two Houses of Parliament. Such is not the doctrine, however, of the English courts to-day. In the case of *Stockdale* v. *Hansard* (9 Ad. & E. 1), Mr. Justice Coleridge says: "The House is not a court of law at all in the sense in which that term can alone be properly applied here. Neither originally nor by appeal can it decide a matter in litigation between two parties; it has no means of doing so; it claims no such power; powers of inquiry and of accusation it has, but it decides nothing judicially, except where it is itself a party, in the case of contempts. . . . Considered merely as resolutions or acts, I have yet to learn that this court is to be restrained by the dignity or the power of any body, however exalted, from fearlessly, though respectfully, examining their reasonableness and justice, where the rights of third persons, in litigation before us, depend upon their validity." Again, he says: "Let me suppose, by way of illustration, an extreme case; the House of Commons resolves that any one wearing a dress of a particular manufacture is guilty of a breach of privilege, and orders the arrest of such persons by the constable of the parish. An arrest is made and action brought, to which the order of the House is pleaded as a justification. . . . In such a case as the one supposed, the plaintiff's counsel would insist on the distinction between power and privilege; and no lawyer can seriously doubt that it exists: but the argument confounds them, and forbids us to enquire, in any particular case, whether it ranges under the one or the other. I can find no principle which sanctions this."

The case of *Kielley* v. *Carson and Others* (4 Moo. P. C. 63), from which we have before quoted so largely, held that

the order of the assembly, finding the plaintiff guilty of a contempt, was no defence to the action for imprisonment. And it is to be observed that the case of *Anderson* v. *Dunn* was cited there in argument.

But we have found no better expression of the true principle on this subject than in the following language of Mr. Justice Hoar, in the Supreme Court of Massachusetts, in the case of *Burnham* v. *Morrissey*, 14 Gray, 226. That was a case in which the plaintiff was imprisoned under an order of the House of Representatives of the Massachusetts legislature for refusing to answer certain questions as a witness and to produce certain books and papers. The opinion, or statement rather, was concurred in by all the court, including the venerable Mr. Chief Justice Shaw.

"The house of representatives is not the final judge of its own power and privileges in cases in which the rights and liberties of the subject are concerned, but the legality of its action may be examined and determined by this court. That house is not the legislature, but only a part of it, and is therefore subject in its action to the laws, in common with all other bodies, officers, and tribunals within the Commonwealth. Especially is it competent and proper for this court to consider whether its proceedings are in conformity with the Constitution and laws, because, living under a written constitution, no branch or department of the government is supreme; and it is the province and duty of the judicial department to determine in cases regularly brought before them, whether the powers of any branch of the government, and even those of the legislature in the enactment of laws, have been exercised in conformity to the Constitution; and if they have not, to treat their acts as null and void. The house of representatives has the power under the Constitution to imprison for contempt; but the power is limited to cases expressly provided for by the Constitution, or to cases where the power is necessarily implied from those constitutional functions and duties, to the proper performance of which it is essential."

In this statement of the law, and in the principles there laid down, we fully concur.

We must, therefore, hold, notwithstanding what is said in

the case of *Anderson* v. *Dunn*, that the resolution of the House of Representatives finding Kilbourn guilty of contempt, and the warrant of its speaker for his commitment to prison, are not conclusive in this case, and in fact are no justification, because, as the whole plea shows, the House was without authority in the matter.

It remains to consider the matter special to the other defendants set out in their plea, which claims the protection due to their character as members of the House of Representatives. In support of this defence they allege that they did not in any manner assist in the arrest of Kilbourn or his imprisonment, nor did they order or direct the same, except by their votes and by their participation as members in the introduction of, and assent to, the official acts and proceedings of the House, which they did and performed as members of the House, in the due discharge of their duties, and not otherwise.

As these defendants did not make the actual assault on the plaintiff, nor personally assist in arresting or confining him, they can only be held liable on the charge made against them as persons who had ordered or directed in the matter, so as to become responsible for the acts which they directed.

The general doctrine that the person who procures the arrest of another by judicial process, by instituting and conducting the proceedings, is liable to an action for false imprisonment, where he acts without probable cause, is not to be controverted. Nor can it be denied that he who assumes the authority to order the imprisonment of another is responsible for the acts of the person to whom such order is given, when the arrest is without justification. The plea of these defendants shows that it was they who initiated the proceedings under which the plaintiff was arrested. It was they who reported to the House his refusal to answer the questions which they had put to him, and to produce the books and papers which they had demanded of him. They expressed the opinion in that report that plaintiff was guilty of a contempt of the authority of the House in so acting. It is a fair inference from this plea that they were the active parties in setting on foot the proceeding by which he was adjudged guilty of a contempt, and in procuring the passage of that resolution.

If they had done this in any ordinary tribunal, without probable cause, they would have been liable for the action which they had thus promoted.

The House of Representatives is not an ordinary tribunal. The defendants set up the protection of the Constitution, under which they do business as part of the Congress of the United States. That Constitution declares that the senators and representatives "shall in all cases, except treason, felony, and breach of the peace, be privileged from arrest during their attendance at the session of their respective Houses, and in going to and returning from the same; and for any speech or debate in either House they shall not be questioned in any other place."

Is what the defendants did in the matter in hand covered by this provision? Is a resolution offered by a member, a speech or debate, within the meaning of the clause? Does its protection extend to the report which they made to the House of Kilbourn's delinquency? To the expression of opinion that he was in contempt of the authority of the House? To their vote in favor of the resolution under which he was imprisoned? If these questions be answered in the affirmative, they cannot be brought in question for their action in a court of justice or in any other place. And yet if a report, or a resolution, or a vote is not a speech or debate, of what value is the constitutional protection?

We may, perhaps, find some aid in ascertaining the meaning of this provision, if we can find out its source, and fortunately in this there is no difficulty. For while the framers of the Constitution did not adopt the *lex et consuetudo* of the English Parliament as a whole, they did incorporate such parts of it, and with it such privileges of Parliament, as they thought proper to be applied to the two Houses of Congress Some of these we have already referred to, as the right to make rules of procedure, to determine the election and qualification of its members, to preserve order, &c. In the sentence we have just cited another part of the privileges of Parliament are made privileges of Congress. The freedom from arrest and freedom of speech in the two Houses of Parliament were long subjects of contest between the Tudor and Stuart kings and the House

of Commons. When, however, the revolution of 1688 expelled the last of the Stuarts and introduced a new dynasty, many of these questions were settled by a bill of rights, formally declared by the Parliament and assented to by the crown. 1 W. & M., st. 2, c. 2. One of these declarations is "that the freedom of speech, and debates, and proceedings in Parliament, ought not to be impeached or questioned in any court or place out of Parliament."

In *Stockdale* v. *Hansard*, Lord Denman, speaking on this subject, says: "The privilege of having their debates unquestioned, though denied when the members began to speak their minds freely in the time of Queen Elizabeth, and punished in its exercise both by that princess and her two successors, was soon clearly perceived to be indispensable and universally acknowledged. By consequence, whatever is done within the walls of either assembly must pass without question in any other place. For speeches made in Parliament by a member to the prejudice of any other person, or hazardous to the public peace, that member enjoys complete impunity. For every paper signed by the speaker by order of the House, though to the last degree calumnious, or even if it brought personal suffering upon individuals, the speaker cannot be arraigned in a court of justice. But if the calumnious or inflammatory speeches should be reported and published, the law will attach responsibility on the publisher. So if the speaker by authority of the House order an illegal act, though that authority shall exempt him from question, his order shall no more justify the person who executed it than King Charles's warrant for levying ship-money could justify his revenue officer."

Taking this to be a sound statement of the legal effect of the Bill of Rights and of the parliamentary law of England, it may be reasonably inferred that the framers of the Constitution meant the same thing by the use of language borrowed from that source.

Many of the colonies, which afterwards became States in our Union, had similar provisions in their charters or in bills of rights, which were part of their fundamental laws; and the general idea in all of them, however expressed, must have been the same, and must have been in the minds of the members of

the constitutional convention. In the Constitution of the State of Massachusetts of 1780, adopted during the war of the Revolution, the twenty-first article of the Bill of Rights embodies the principle in the following language: "The freedom of deliberation, speech, and debate in either House of the legislature is so essential to the rights of the people, that it cannot be the foundation of any accusation or prosecution, action, or complaint, in any other court or place whatsoever."

This article received a construction as early as 1808, in the Supreme Court of that State, in the case of *Coffin* v. *Coffin* (4 Mass. 1), in which Mr. Chief Justice Parsons delivered the opinion. The case was an action for slander, the offensive language being used in a conversation in the House of Representatives of the Massachusetts legislature. The words were not delivered in the course of a regular address or speech, though on the floor of the House while in session, but were used in a conversation between three of the members, when neither of them was addressing the chair. It had relation, however, to a matter which had a few moments before been under discussion. In speaking of this article of the Bill of Rights, the protection of which had been invoked in the plea, the Chief Justice said: "These privileges are thus secured, not with the intention of protecting the members against prosecutions for their own benefit, but to support the rights of the people, by enabling their representatives to execute the functions of their office without fear of prosecutions, civil or criminal. I, therefore, think that the article ought not to be construed strictly, but liberally, that the full design of it may be answered. I will not confine it to delivering an opinion, uttering a speech, or haranguing in debate, but will extend it to the giving of a vote, to the making of a written report, and to every other act resulting from the nature and in the execution of the office. And I would define the article as securing to every member exemption from prosecution for everything said or done by him as a representative, in the exercise of the functions of that office, without inquiring whether the exercise was regular, according to the rules of the House, or irregular and against their rules. I do not confine the member to his place in the House; and I am satisfied that there are cases in which

he is entitled to this privilege when not within the walls of the representatives' chamber."

The report states that the other judges, namely, Sedgwick, Sewall, Thatcher, and Parker, concurred in the opinion.

This is, perhaps, the most authoritative case in this country on the construction of the provision in regard to freedom of debate in legislative bodies, and being so early after the formation of the Constitution of the United States, is of much weight. We have been unable to find any decision of a Federal court on this clause of section 6 of article 1, though the previous clause concerning exemption from arrest has been often construed.

Mr. Justice Story (sect. 866 of his Commentaries on the Constitution) says: "The next great and vital privilege is the freedom of speech and debate, without which all other privileges would be comparatively unimportant or ineffectual. This privilege also is derived from the practice of the British Parliament, and was in full exercise in our colonial legislation, and now belongs to the legislation of every State in the Union as matter of constitutional right."

It seems to us that the views expressed in the authorities we have cited are sound and are applicable to this case. It would be a narrow view of the constitutional provision to limit it to words spoken in debate. The reason of the rule is as forcible in its application to written reports presented in that body by its committees, to resolutions offered, which, though in writing, must be reproduced in speech, and to the act of voting, whether it is done vocally or by passing between the tellers. In short, to things generally done in a session of the House by one of its members in relation to the business before it.

It is not necessary to decide here that there may not be things done, in the one House or the other, of an extraordinary character, for which the members who take part in the act may be held legally responsible. If we could suppose the members of these bodies so far to forget their high functions and the noble instrument under which they act as to imitate the Long Parliament in the execution of the Chief Magistrate of the nation, or to follow the example of the French Assem-

bly in assuming the function of a court for capital punishment we are not prepared to say that such an utter perversion of their powers to a criminal purpose would be screened from punishment by the constitutional provision for freedom of debate. In this, as in other matters which have been pressed on our attention, we prefer to decide only what is necessary to the case in hand, and we think the plea set up by those of the defendants who were members of the House is a good defence, and the judgment of the court overruling the demurrer to it and giving judgment for those defendants will be affirmed. As to Thompson, the judgment will be reversed and the case remanded for further proceedings.

So ordered.

BARNEY v. LATHAM.

1. The second clause of the second section of the act of March 3, 1875, c. 137 (18 Stat., part 3, p. 470), construed, and *held*, that, when in any suit mentioned therein there is a controversy wholly between citizens of different States, which can be fully determined as between them, then either one or more of the plaintiffs or the defendants actually interested in such controversy may, on complying with the requirements of the statute, remove the entire suit.
2. The right of removal depends upon the case disclosed by the pleadings when the petition therefor is filed, and is not affected by the fact that a defendant who is a citizen of the same State with one of the plaintiffs may be a proper, but not an indispensable, party to such a controversy.

APPEAL from the Circuit Court of the United States for the District of Minnesota.

The facts are stated in the opinion of the court.

Mr. Thomas Wilson for the appellants.

Mr. Gordon E. Cole, contra.

MR. JUSTICE HARLAN delivered the opinion of the court.

This case involves the construction of the second clause of the second section of the act of March 3, 1875, c. 137 (18 Stat., part 3, p. 470), determining the jurisdiction of the circuit courts of the United States, and regulating the removal of causes from the State courts.

It was commenced by a complaint filed in one of the courts of the State of Minnesota. The plaintiffs are William H. Latham and Edward P. Latham, citizens, respectively, of Minnesota and Indiana. The defendants are Ashbel H. Barney, Jessie Hoyt, Alfred M. Hoyt, Samuel N. Hoyt, William G. Fargo, N. C. Barney, Charles T. Barney, citizens of New York; Angus Smith, a citizen of Wisconsin; Benjamin P. Cheney, a citizen of Massachusetts; and the Winona and St. Peter Land Company, a corporation organized under the laws of Minnesota.

The complaint is very lengthy in its statement of the grounds upon which the suit proceeds, but the facts, so far as it is necessary to state them, are these: —

The Territory and State of Minnesota received, under various acts of Congress, lands to aid in the construction of railroads within its limits. Act of March 3, 1857, c. 99, 11 Stat. 195; Act of March 3, 1865, c. 105, 13 id. 526; Act of July 13, 1866, 183, 14 id. 97. The benefit of the grants from the government was transferred by the State to the Winona and St. Peter Railroad Company, a corporation created under its own laws, with authority to construct a road from Winona westerly by way of St. Peter in that State.

Prior to Oct. 31, 1867, the individual defendants already named (except N. C. Barney and Charles T. Barney), together with Charles F. Latham and Danforth N. Barney (both of whom died before the commencement of this suit), had constructed one hundred and five miles of the proposed road for that company, whereby it became entitled to several hundred thousand acres of land, which it agreed, in consideration of its indebtedness to those persons, to sell and convey to them, excepting so much thereof as was necessary for tracks, right of way, depot grounds, and other purposes incidental to the operation of the road. Of the moneys advanced and used in construction Charles F. Latham contributed one thirty-seventh, and to that extent, it is claimed, he was entitled, in equity, to an undivided one thirty-seventh of the lands earned. The company, prior to October, 1870, received from the State conveyances of lands to the extent of 364,154 acres, which quantity was increased to 617,510 acres by a deed from the State, of

date Feb. 26, 1872; and on May 30, 1874, it received a further conveyance for more than 500,000 acres. Up to the end of the year 1869 the railroad company made numerous sales, on long time, and in small quantities for actual settlement. Charles F. Latham died in October, 1870, seised and possessed, it is contended, of the equitable title to the undivided one thirty-seventh of the lands earned. He left nine heirs-at-law, among whom are the plaintiffs. The defendant, Ashbel H. Barney, acting for his associates, had a settlement with those heirs in reference to the sales of lands, and procured releases from them, which are averred to have been fraudulent and void as to the present plaintiffs. The facts averred in support of that charge need not be here detailed. They are fully set forth in the complaint. The surviving associates of Charles F. Latham, together with N. C. Barney and Charles F. Barney, heirs-at-law of D. N. Barney, deceased, without the knowledge and consent of plaintiffs, incorporated themselves under the general laws of the State of Minnesota, as the Winona and St. Peter Land Company, to which, by their direction, the railroad company conveyed, and by which were thereafter managed, all the lands remaining unsold. The plaintiffs claimed that the individual defendants owed them, as heirs of Charles F. Latham, the further sum of $3,500, on account of sales of land made both prior to his death and subsequently thereto, up to the time when the title to the lands was conveyed to the land company. The individual defendants repudiated the claim of plaintiffs to any further sum on that account, and the land company refused to recognize the claim of plaintiffs to an interest in the unsold lands.

The specific relief asked for is, —

1. That the individual defendants be required to account to plaintiffs for the amount of all moneys which came to their hands from the sales of land prior to the death of Charles F. Latham, and pay over to plaintiffs the sum of $3,500, or such other sum as shall be found, on an accounting, to be due them as their share thereof; also such amounts as might be due them out of the sums received by Ashbel H. Barney, from purchasers subsequently to the death of Charles F. Latham;

2. That the plaintiffs be adjudged to be the owners of two-

ninths of one thirty-seventh part of all unpaid contracts and securities in the hands of the land commissioner of the company; that the land company be required to account with plaintiffs for all lands sold by it subsequently to the conveyance from the railroad company, and convey to them an undivided two-ninths of one thirty-seventh of all the unsold lands.

The individual defendants answered and put in issue all the material allegations of the complaint.

The land company, in its answer, admits the conveyance by the railroad company to have been without any consideration by it paid; that the stock therein is all held by its co-defendants and the heirs or personal representatives of D. N. Barney; and that, if the relief prayed for against the other defendants be granted, the company is liable to and should account to plaintiffs as asked in their complaint. It consented that the matters and facts established and proven as against its co-defendants may be considered as established and proven against it, and such judgment accordingly entered as might be equitable and proper.

Upon the petition, accompanied by a proper bond, filed by the individual defendants, the State court entered an order that it would proceed no further in the suit. But upon motion of plaintiffs the Circuit Court remanded the suit to the State court, upon the ground that it was not removable under the act of Congress.

Is this suit removable upon the petition of the individual defendants, citizens of New York, Wisconsin, and Massachusetts? Does the fact that the land company, one of the defendants, is a corporation of Minnesota, of which State one of the plaintiffs is a citizen, prevent a removal of the suit to the Circuit Court of the United States?

The answer to these questions depends upon the construction which may be given to the second clause of the second section of the act of March 3, 1875, c. 137.

We will be aided in our construction of that act by recalling as well the language as the settled interpretation of previous enactments upon the subject of removal of causes from State courts.

The act of Sept. 24, 1789, c. 20, gives the right of removal

to the defendant in any suit, instituted by a citizen of the State in which the suit is brought against a citizen of another State. According to the uniform decisions of this court it applied only to cases in which all the plaintiffs were citizens of the State in which the suit was brought, and all the defendants citizens of other States. It made no distinction between a suit and the different controversies which might arise therein between the several parties; that is, Congress, when authorizing the removal of the suit, did not permit any controversy therein between particular parties to be carried into the Federal court, leaving the remaining controversies in the State court for its determination. If the whole suit could not be removed, no part of it could be taken from the State court.

Thus stood the law until the act of July 27, 1866, c. 288, which (omitting such portions as have no bearing upon the present question) provides that—

"If in any suit . . . in any State court . . . by a citizen of the State in which the suit is brought against the citizen of another State, . . . a citizen of the State in which the suit is brought is or shall be a defendant, and if the suit, so far as relates . . . to the defendant who is a citizen of a State other than that in which the suit is brought, is or has been instituted or prosecuted for the purpose of restraining or enjoining him, or if the suit is one in which there can be a final determination of the controversy, so far as it concerns him, without the presence of the other defendants as parties in the cause, then and in every such case . . . the defendant who is a citizen of a State other than that in which the suit is brought, may, at any time before the trial or final hearing of the cause, file a petition for the removal of the cause as against him into the next Circuit Court of the United States, to be held in the district where the suit is pending, and offer good and sufficient surety for his entering in such court . . . copies of said process against him, and of all pleadings, depositions, testimony, and other proceedings in said cause affecting or concerning him, and also for his there appearing; . . . and it shall be thereupon the duty of the State court to accept the surety and proceed no further in the cause as against the defendant so applying for its removal. . . . and the said copies being entered as aforesaid in such court of the United States the cause shall there proceed in the same manner as if it had been brought there by original process against the defendant

who shall have so filed a petition for its removal as above provided. . . . And such removal of the cause, as against the defendant petitioning therefor, into the United States court shall not be deemed to prejudice or take away the right of the plaintiff to proceed at the same time with the suit in the State court as against the other defendants, if he shall desire to do so." 14 Stat. 306.

This provision is explicit, and leaves no room to doubt what Congress intended to accomplish. It proceeds, plainly, upon the ground, among others, that a suit may, under correct pleading, embrace several controversies, one of which may be between the plaintiff and that defendant who is a citizen of a State other than that in which the suit is brought; that to the final determination of such separate controversy the other defendants may not be indispensable parties; that in such a case, although the citizen of another State, under the particular mode of pleading adopted by the plaintiff, is made a co-defendant with one whose citizenship is the same as the plaintiff's, he should not, as to his separable controversy, be required to remain in the State court, and surrender his constitutional right to invoke the jurisdiction of the Federal court; but that, at *his* election, at any time before the trial or final hearing, the cause, *so far as it concerns him*, might be removed into the Federal court, leaving the plaintiff, if he so desires, to proceed, in the State court, against the other defendant or defendants. When there were several defendants to that separable controversy, all of whom are citizens of States other than that in which the suit was brought, they could unite in claiming the removal of such controversy.

Next came the act of March 2, 1867, c. 196, which allows the citizen of the State other than that in which the suit was brought, whether plaintiff or defendant, upon the proper affidavit of prejudice or local influence, filed before the final hearing or trial of the suit, to remove the suit into the Federal court. 14 Stat. 558. It was construed in *Case of the Sewing Machine Companies* (18 Wall. 553) as allowing a removal, upon such an affidavit, only where there is a common citizenship upon each side of the controversy raised by the suit; that is, all on one side being citizens of the State in which the suit is brought, while all on the other side are citizens of other States. In

that case the plaintiff and one of the defendants were citizens of the State where the suit was brought, while two of the defendants were citizens of other States. It was ruled that whatever was the purpose of the act of 1866 as to the particular cases therein provided for, Congress did not intend, by the act of 1867, to give to parties, who are citizens of States other than that in which the suit is brought, the right of removal upon the ground of prejudice or local influence, when their co-defendants or co-plaintiffs, as the case might be, are citizens of the same State with some of the adverse parties. The court there evidently had in mind the case where the presence in the suit of all the parties, on the side seeking the removal, was essential in order that complete justice might be done, and not a suit in which there was a separable controversy, removable under the act of 1866.

We come now to the act of March 3, 1875, c. 137, the second section of which provides, —

"That any suit of a civil nature at law or in equity now pending or hereafter brought in any State court, where the matter in dispute exceeds, exclusive of costs, the sum or value of $500, . . . in which there is a controversy between citizens of different States, . . . either party may remove said suit into the Circuit Court of the United States for the proper district; and when, in any suit mentioned in this section, there shall be a controversy which is wholly between citizens of different States, and which can be fully determined as between them, then either one or more of the plaintiffs or defendants, actually interested in such controversy, may remove said suit to the Circuit Court of the United States for the proper district." 18 Stat., pt. 3, p. 470.

We had occasion to consider the meaning of the first clause of this section in *Removal Cases*, 100 U. S. 457. Disregarding as immaterial the mere form of the pleadings, and placing the parties on opposite sides of the real matter in dispute according to the facts, we found that the only controversy there was between citizens of Ohio and Pennsylvania on one side, and certain corporations created under the laws of Iowa on the other. And we held that if, in arranging the parties upon the respective sides of the real matter in dispute, all those on one side are citizens of different States from those on the other, the

suit is removable under the first clause of the second section of the act of 1875, those upon the side seeking a removal uniting in the petition therefor. Whether that suit was not also removable under the second clause of that section we reserved for consideration until it became necessary to construe that part of the statute. The present case imposes that duty upon us.

We may remark that with the policy of the act of 1875 we have nothing to do. Our duty is to give effect to the will of the law-making power when expressed within the limits of the Constitution.

We are of opinion that the intention of Congress, by the clause under consideration, was not only to preserve some of the substantial features or principles of the act of 1866, but to make radical changes in the law regulating the removal of causes from State courts. One difference between that act and the second clause of the second section of the act of 1875 is, that whereas the former accorded the right of removal to the defendants who were citizens of a State other than that one in which the suit was brought, — if between them and the plaintiff or plaintiffs there was, in the suit, a controversy finally determinable as between them, without the presence of their co-defendants, or any of them, citizens of the same State with plaintiffs, — the latter gave such right to any one or more of the plaintiffs or the defendants actually interested in such separate controversy. Both acts alike recognized the fact that a suit might, consistently with the rules of pleading, embrace several distinct controversies. But while the act of 1866, in express terms, authorized the removal only of the separable controversy between the plaintiff and the defendant or defendants seeking such removal, — leaving the remainder of the suit, at the election of the plaintiff, in the State court, — the act of 1875 provides, in that class of cases, for the removal of the entire suit.

That such was the intention of Congress is a proposition which seems too obvious to require enforcement by argument. While the act of 1866 expressly confines the removal to that part of the suit which specially relates to or concerns the defendant seeking the removal, there is nothing whatever in the act of 1875 justifying the conclusion that Congress intended to

leave any part of a suit in the State court where the right of removal was given to, and was exercised by, any of the parties to a separable controversy therein. Much confusion and embarrassment, as well as increase in the cost of litigation, had been found to result from the provision in the former act permitting the separation of controversies arising in a suit, removing some to the Federal court, and leaving others in the State court for determination. It was often convenient to embrace in one suit all the controversies which were so far connected by their circumstances as to make all who sue, or are sued, proper, though not indispensable parties. Rather than split up such a suit between courts of different jurisdictions, Congress determined that the removal of the separable controversy to which the judicial power of the United States was, by the Constitution, expressly extended, should operate to transfer the whole suit to the Federal court.

If the clause of the act of 1875, under consideration, is not to be thus construed, it is difficult to perceive what purpose there was in dropping those portions of the act of 1866 which, *ex industria*, limited the removal, in the class of cases therein provided for, to that controversy in the suit, which is distinctively between citizens of different States, and of which there could be a final determination without the presence of the other defendants as parties in the cause.

It remains only to inquire how far this construction of the act of 1875 controls the decision of the case now before us. The complaint, beyond question, discloses more than one controversy in the suit. There is a controversy between the plaintiffs and the Winona and St. Peter Land Company, to the full determination of which the other defendants are not, in any legal sense, indispensable parties, although, as stockholders in the company, they may have an interest in its ultimate disposition. Against the latter, as a corporation, a decree is asked requiring it to convey to the plaintiffs the undivided two-ninths of one thirty-seventh of certain lands, and to account for the proceeds of the lands by it sold subsequently to the conveyance from the railroad company.

But the suit as distinctly presents another and entirely separate controversy, as to the right of the plaintiffs to a decree

against the individual defendants for such sum as shall be found, upon an accounting, to be due from them upon sales prior to the conveyance from the railroad company. With that controversy the land company, as a corporation, has no necessary connection. It can be fully determined as between the parties actually interested in it without the presence of that company as a party in the cause. Had the present suit sought no other relief than such a decree, it could not be pretended that the corporation would have been a necessary or indispensable party to that issue. Such a controversy does not cease to be one wholly between the plaintiffs and those defendants because the former, for their own convenience, choose to embody in their complaint a distinct controversy between themselves and the land company. When the petition for removal was presented, there was in the suit, as framed by plaintiffs, a controversy wholly between citizens of different States, that is, between the plaintiffs, citizens respectively of Minnesota and Indiana, and the individual defendants, citizens of New York, Wisconsin, and Massachusetts. And since the presence of the land company is not essential to its full determination, the defendants, citizens of New York, Wisconsin, and Massachusetts, were entitled, by the express words of the statute, to have the suit removed to the Federal court.

It may be suggested that if the complaint has united causes of action, which, under the settled rules of pleading, need not, or should not, have been united in one suit, the removal ought not to carry into the Federal court any controversy except that which is wholly between citizens of different States, leaving for the determination of the State court the controversy between the plaintiffs and the land company. We have endeavored to show that the land company was not an indispensable party to the controversy between the plaintiffs and the defendants, citizens of New York, Wisconsin, and Massachusetts. Whether those defendants and the land company were not *proper* parties to the suit we do not now decide. We are not advised that any such question was passed upon in the court below. It was not discussed here, and we are not disposed to conclude its determination by the court of original jurisdiction, when it is therein presented in proper form. A defendant may be a

proper, but not an indispensable, party to the relief asked. In a variety of cases it is in the discretion of the plaintiff as to whom he will join as defendants. Consistently with established rules of pleading he may be governed often by considerations of mere convenience; and it may be that there was, or is, such a connection between the various transactions set out in the complaint as to make all of the defendants proper parties to the suit, and to every controversy embraced by it, — at least, in such a sense as to protect the complaint against a demurrer upon the ground of multifariousness or misjoinder.

In *Oliver* v. *Piatt* (3 How. 333, 411) we said: "It was well observed by Lord Cottenham, in *Campbell* v. *Mackay*, 1 Myl. & Cr. 603, and the same doctrine was affirmed in this court in *Gaines and Wife* v. *Relf and Chew*, 2 How. 619, 642, that it is impracticable to lay down any rule, as to what constitutes multifariousness as an abstract proposition; that each case must depend upon its own circumstances; and much must necessarily be left, where the authorities leave it, to the sound discretion of the court." We further said that the objection of multifariousness cannot, "as a matter of right, be taken by the parties, except by demurrer, or plea, or answer, and if not so taken it is deemed to be waived;" that although the court may take the objection, it will not do so unless it deems such a course necessary or proper to assist in the due administration of justice. Story, Eq. Pl., sects. 530, 540; *Shields* v. *Thomas*, 18 How. 253; *Fitch* v. *Creighton*, 24 id. 159. No objection was taken by the defendants in the court below to the complaint upon the ground of multifariousness or misjoinder, and the plaintiffs should not be heard to make it for the purpose, or with the effect, of defeating the right of removal. They are not in any position to say that that right does not exist, because they have made defendants those who were not proper parties to the entire relief asked. The fault, if any, in pleading, was theirs. Under their mode of pleading, whether adopted with or without a purpose to affect the right of removal, accorded by the statute, the suit presents two separate controversies, one of which is wholly between individual citizens of different States, and can be fully determined without the presence of the other party defendant. The right of

removal, if claimed, in the mode prescribed by the statute, depends upon the case disclosed by the pleadings as they stand when the petition for removal is filed. The State court ought not to disregard the petition, upon the ground that, in its opinion the plaintiffs, against whom a removal is sought, had united causes of action which should or might have been asserted in separate suits. Those are matters more properly for the determination of the trial court, that is, the Federal court, after the cause is there docketed. If that court should be of opinion that the suit is obnoxious to the objection of multifariousness or misjoinder, and for that reason should require the pleadings to be reformed, both as to subject-matter and parties, according to the rules and practice which obtain in the courts of the United States, and if, when that is done, the cause does not really and substantially involve a dispute or controversy within the jurisdiction of that court, it can, under the fifth section of the act of 1875, dismiss the suit, or remand it to the State court as justice requires.

We are of opinion that, upon the filing of the petition and bond by the individual defendants in the separable controversy between them and the plaintiffs, the entire suit, although all the defendants may have been proper parties thereto, was removed to the Circuit Court of the United States, and that the order remanding it to the State court was erroneous.

The judgment is reversed with directions to the court below to overrule the motion to remand, to reinstate the cause upon its docket, and proceed therein in conformity with the principles of this opinion.

So ordered.

MR. CHIEF JUSTICE WAITE, MR. JUSTICE MILLER, and MR. JUSTICE FIELD dissented.

WILMOT v. MUDGE.

An action on a debt or claim is not barred by a composition between a debtor and his creditors, under sect. 17 of the act of June 22, 1874, c. 390 (18 Stat., pt. 3, p. 183), if it would not be barred by his discharge under the bankrupt law.

ERROR to the Superior Court of the Commonwealth of Massachusetts.

The facts are stated in the opinion of the court.

Mr. James B. Richardson for the plaintiff in error.
Mr. Moorfield Storey, contra.

MR. JUSTICE MILLER delivered the opinion of the court.

Mudge & Co. brought their action against Wilmot in the Superior Court of Massachusetts, in tort, for false representations whereby the plaintiffs were induced to sell him certain goods on credit. The damages claimed were their value. He denied the false representations, and also pleaded a composition order of the District Court of the United States, and his offer to pay the plaintiffs what was due them under the composition.

The case was tried without a jury by the court, who found for the plaintiffs, and gave judgment for the agreed price of the goods.

The Supreme Court of Massachusetts affirmed the judgment on all points. Wilmot sued out this writ.

The only question we can consider is whether the composition with the order of the court thereon is a discharge of Wilmot's liability on account of the cause of action on which he was sued in this case.

The Supreme Court of Massachusetts held that it was not such a discharge, because the action was founded on a fraud.

Sect. 5117 of the Revised Statutes enacts that "no debt created by the fraud or embezzlement of the bankrupt, or by his defalcation as a public officer, or while acting in any fiduciary character, shall be discharged by proceedings in bankruptcy; but the debt may be proved, and the dividend thereon shall be a payment on account of such debt." The phraseology

of the original statute of bankruptcy of 1867 was that no such debt "shall *be discharged under this act;*" and an argument is made that while such debt might not be discharged under the act of 1867, it might be under the composition provided for by the act of 1874, because the latter was a different act. We are of opinion that the language of the Revised Statutes expresses the true construction of the act of 1867, namely, that no such debt should be discharged by the proceedings which the bankrupt law of the United States authorized. The language adopted in the act of 1867 was appropriate, because that was the only bankrupt act then in existence, and established a complete system in itself. When the Revised Statutes came to be enacted, many amendments had been made to the original act, and as none of them were supposed to affect the principle that debts founded in fraud should not be discharged by bankrupt proceedings, it was proper to say so.

The seventeenth section of the act of 1874, c. 390, introduced the system of composition which, when the proposal of the bankrupt to pay a certain proportion of his debts had been accepted by a majority in number and three-fourths in value of the creditors, and confirmed by the signatures of the parties and approved by the court, "shall be binding on all the creditors whose names and addresses, and the amounts of the debts due to whom, are shown in the statement of the debtor produced at the meeting at which the resolution shall have been passed, but shall not affect or prejudice the rights of any other creditors." 18 Stat., pt. 3, p. 183. Everything was done which this act required to bring Mudge & Co. within its provisions. Although they had received notice of the meeting which passed the composition resolution, they did not take part in the proceedings, nor accept the sum to which by its terms they were entitled, though they were included in Wilmot's list of creditors.

Their counsel relies solely on the proposition, that as their claim against him arises out of his fraudulent representations to them in purchasing the goods, their debt is not discharged by this composition, nor by any other proceedings in bankruptcy.

To this it is answered that proceedings in composition are not in bankruptcy, but so far distinct therefrom, that they constitute a compromise and release of the debtor by virtue of the provision which declares them binding on both parties.

It is said to be an accord and satisfaction. But this requires the voluntary assent of the creditor, which in this case was not given.

Next, it is said that the seventeenth section of the act of 1874, which provides for this composition, is not *in pari materia* with the bankrupt law, and is a new and independent mode of distributing the bankrupt's assets, and releasing him from his debt, and is not a part of the proceedings under the bankrupt law.

We do not understand that there is any power in the debtor to invoke this remedy until proceedings in bankruptcy have been commenced by him or against him under the bankrupt law. Nor can the District Court make the necessary order establishing the composition except in such proceedings, either voluntary or involuntary. The composition proceeding is, therefore, a part of the proceedings in bankruptcy, and one of the modes which the bankrupt law authorizes of releasing the debtor and securing to his creditors an equal share of his means.

The seventeenth section itself is one of many amending the bankrupt law in numerous particulars, and is declared to be an amendment of sect. 43 of the original act of 1867.

We are very clear, therefore, that the provision for composition is a proceeding in bankruptcy under the Bankrupt Act, whether reference be had to the language of the act of 1867 or of the Revised Statutes, that debts created by fraud shall not be discharged under it. See opinion of Mr. Chief Justice Waite, *In re Holmes & Lissberger*, 15 Blatchf. 170.

But the act of 1874, which contains the provision for composition, is later in date than the act of 1867 or the Revised Statutes, for as to the latter it must be so held, though both were actually passed at the same session of Congress; and if the later act is in conflict with the older, so that they cannot be reconciled, the last must prevail. In other words, it is a repeal *pro tanto* of the first act.

That this is the true view of the several provisions of the statutes referred to is strongly urged by counsel for the plaintiff in error, on account of the positive language of the latest enactment. "The provisions of a composition accepted by such a resolution in pursuance of this section shall be binding on all the creditors whose names and addresses and the amount of the debts due to whom are shown in the statement of the debtor produced at the meeting at which the resolution shall have been passed."

It is conceded that the defendants in error came within the terms of this provision, and it is insisted that they must be bound by the composition. We admit the apparent force of the logic. But, as we have already said, these several statutes, sections, and provisions are to be construed as parts of one entire system of bankrupt law. No positive enactment found in one part of it is to be considered as repealed by another, unless it be by express language or by necessary implication. The provision that no debt created by a fraud shall be discharged by any proceedings in bankruptcy is a very positive and clear statement of a principle applicable as well to such proceedings authorized after as before this special one was enacted. The resolution of composition is a proceeding in bankruptcy. Can it be binding *on the parties* within the meaning of the act, and not discharge the claims of all who come within its terms?

If those to be affected by it are such as hold claims that may be discharged by bankrupt proceedings, then all are bound by it. But if there is a person who has proved his debt, and who for the purpose of receiving a dividend declared in the usual mode is a proper party to the general proceeding, but whose claim is at the same time one which, though provable in bankruptcy, cannot be discharged by the bankrupt law, we do not see why the composition may not be binding on others and not on him. There is no injustice nor any difficulty in restraining the language of the composition section, as regards its binding force, to persons whose debts are capable of being discharged by the bankrupt law.

If a certain class of debts cannot be discharged by proceedings in bankruptcy, then they cannot be discharged by this proceeding, for it is a proceeding in bankruptcy. If all other

debts may be discharged by a composition in bankruptcy, then the debtor and the other creditors get its benefit and are bound by it, while the one whose debt may not be thus discharged does not. He neither takes its benefit nor is he bound by it.

In this manner both provisions of the bankrupt law can stand and be consistent. Thus construed there is no conflict between them, and each has its appropriate sphere of operation and the effect which the law-makers intended.

The rules of construing statutes in like cases with the present are so well understood as to need no citation of authorities.

They are, first, that effect shall be given to all the words of a statute, where this is possible without a conflict; and, second, that as regards statutes *in pari materia* of different dates, the last shall repeal the first only when there are express terms of repeal, or where the implication of repeal is a necessary one. When repeal by implication is relied on it must be impossible for both provisions under consideration to stand, because one necessarily destroys the other. If both can stand by any reasonable construction, that construction must be adopted. We think that which we have already suggested reconciles the two provisions without doing violence to either. Numerous decisions of respectable courts are cited by counsel on each side. Several of these are in conflict with each other. None of these courts are of higher authority than the one which rendered the judgment we are now reviewing, and as it concurs with our own views, it is

Affirmed.

RELFE v. RUNDLE.

A final decree of the proper court dissolved an insolvent life insurance company of Missouri, and, as provided by the statutes in force, vested, for the use and benefit of creditors and policy-holders, its entire property in A., a citizen of that State and superintendent of her insurance department. *Held*, 1. That the statutes being in force when the charter of the company was granted, are, in legal effect, a part thereof. 2. That a suit having been previously instituted in a court of Louisiana by citizens of the latter State against the company, A. was, on being admitted a party thereto, entitled, by reason of his citizenship, to remove it to the Circuit Court of the United States.

APPEAL from the Circuit Court of the United States for the District of Louisiana.

The facts are stated in the opinion of the court.

Mr. James Carr and *Mr. George D. Reynolds* for the appellant.

Mr. Armand Pitot for the appellee.

MR. CHIEF JUSTICE WAITE delivered the opinion of the court.

The Life Association of America was, on the 5th of November, 1879, a corporation of the State of Missouri, for the purpose of doing a life insurance business, with its chief office at St. Louis, in that State. By the laws of Missouri, the superintendent of the insurance department of the State government might, under certain circumstances, institute proceedings in the courts of the State for the dissolution of such a corporation and the winding up of its affairs. Sect. 6043 of the Revised Statutes of Missouri is as follows: —

"Upon the rendition of a final judgment dissolving a company, or declaring it insolvent, all the assets of such company shall vest in fee-simple and absolutely in the superintendent of the insurance department of this State, and his successor or successors in office, who shall hold and dispose of the same for the use and benefit of the creditors and policy-holders of such company, and such other persons as may be interested in such assets."

On the 13th of October, 1879, L. E. Alexander, a citizen of Missouri, and the receiver of the Columbia Life Insurance Company of Missouri, recovered a claim against the Life Association

of America for $1,100,000, and thereupon William S. Relfe, the superintendent of the insurance department of the State, commenced proceedings under the statute to dissolve the last-named corporation and wind up its affairs. In his petition he prayed that the company might be enjoined from doing any further business, and that an agent might be appointed to take charge of its property temporarily. Such an order was made in the cause, and D. M. Frost, a citizen of Missouri, appointed temporary agent and receiver. Frost at once qualified under this appointment.

On the 5th of November, 1879, Rundle and wife, the appellees, policy-holders of the company, commenced suit in the Fifth District Court of the Parish of New Orleans, against the life association, Frost, the temporary agent and receiver, John R. Fell, the local agent of the company at New Orleans, and L. E. Alexander, receiver of the Columbia Life Insurance Company, the object of which was to have the assets of the company in Louisiana declared a trust fund and applied to the payment of the claims of Louisiana creditors and policy-holders in preference to others. In the bill the decree in favor of the receiver of the Columbia Life Insurance Company, and the proceedings by Relfe, the superintendent of the insurance department, with the appointment of Frost as temporary receiver, were set out in detail, and the whole object and purpose of the suit was to keep the Louisiana assets out of the hands of Relfe and his successors in office. No special relief was asked against the receiver of the Columbia Life Insurance Company. Upon the filing of the bill, Walter B. Wilcox was appointed receiver. Service of process was made on Alexander only through Francis B. Lee, who was appointed *curator ad hoc* at the same time that Wilcox was appointed receiver. Fell was made a party only for the purpose of reaching property in his hands.

On the 10th of November the company was dissolved by a decree of the Missouri court, and its property vested in Relfe, superintendent of the insurance department, as provided by the statute. On the 17th of the same month Relfe was, on his own motion, made a party to the suit in New Orleans, as the legal representative of the late corporation, and on the 28th he filed a petition for the removal of the cause to the Circuit Court of

the United States for the District of Louisiana. In his petition he set forth his own citizenship in Missouri, and that of the appellees in Louisiana. The citizenship of all the other persons named as parties to the suit appeared in the pleadings. He also gave the security required by the act of Congress, and on the 5th of December, which was in time, filed in the Circuit Court a copy of the record in the State court. On the 9th of the same month the receiver appointed in the State court moved to dismiss the cause and strike it from the docket of the Circuit Court: 1, Because that court was without jurisdiction either of the person or the subject-matter; 2, because Relfe had no standing in court, he being a creature of the State of Missouri, without capacity to sue or remove causes in Louisiana; 3, because the suit was improperly removed; and, 4, because the State court having first taken charge of the property, the Circuit Court could not interfere with the possession of the receiver of that court. While this motion was pending, and on the 30th of December, the life association and Frost filed their petition in the State court, setting forth the former petition of Relfe, and adopting it and all that had been done under it as their own, and also asking that the suit be removed on their own account. They also gave the security required by the act of Congress. On the 5th of January the Circuit Court heard the motion of the State court receiver made on the 9th of December, and remanded the cause. From that order the life association, Relfe, and Frost took this appeal, under the fifth section of the act of 1875, c. 137. 18 Stat., pt. 3, p. 472.

We think the Circuit Court erred in remanding the cause. The entire controversy is between the appellees, representing the Louisiana creditors and policy-holders, on one side, and Relfe, the statutory representative of the corporation and its property, on the other, as to their respective rights to what the appellees claim are Louisiana assets belonging primarily to Louisiana creditors. Fell and the receiver of the Columbia Life Insurance Company are formal parties only. Fell has in his possession, as a naked trustee, some of the Louisiana assets, and the receiver of the Columbia Life Insurance Company is, so far as anything appears, no more than a general creditor of the dissolved corporation whom, necessarily, under the law,

Relfe represents. After the decree of dissolution the Life Association Company had no longer any corporate existence, and the temporary agency and receivership of Frost was ended when the property of the corporation was transferred to Relfe and he became under the law entitled to the possession.

Relfe is not an officer of the Missouri State court, but the person designated by law to take the property of any dissolved life insurance corporation of that State, and hold and dispose of it in trust for the use and benefit of creditors, and other parties interested. The law which clothed him with this trust was, in legal effect, part of the charter of the corporation. He was the statutory successor of the corporation for the purpose of winding up its affairs. As such he represents the corporation at all times and places in all matters connected with his trust. He is the trustee of an express trust, with all the rights which properly belong to such a position. He is an officer of the State, and as such represents the State in its sovereignty while performing its public duties connected with the winding up of the affairs of one of its insolvent and dissolved corporations. His authority does not come from the decree of the court, but from the statute. He appeared in Louisiana not by virtue of any appointment from the court, but as the statutory successor of a corporation which the court had in a legitimate way dissolved and put out of existence. He was, in fact, the corporation itself for all the purposes of winding up its affairs.

We are aware that, except by virtue of some statutory authority, an administrator appointed in one State cannot generally sue in another, and that a receiver appointed by a State court has no extra-territorial power; but a corporation is the creature of legislation, and may be endowed with such powers as its creator sees fit to give. Necessarily it must act through agents, and the State which creates it may say who those agents shall be. One may be its representative when in active operation, and in full possession of all its powers, and another if it has forfeited its charter and has no lawful existence except to wind up its affairs. No State need allow the corporations of other States to do business within its jurisdiction unless it chooses, with perhaps the exception of commercial corporations; but if it does, without limitation, express or implied, the

corporation comes in as it has been created. Every corporation necessarily carries its charter wherever it goes, for that is the law of its existence. It may be restricted in the use of some of its powers while doing business away from its corporate home, but every person who deals with it everywhere is bound to take notice of the provisions which have been made in its charter for the management and control of its affairs both in life and after dissolution.

By the charter of this corporation, if a dissolution was decreed, its property passed by operation of law to the superintendent of the insurance department of the State, and he was charged with the duty of winding up its affairs. Every policy-holder and creditor in Louisiana is charged with notice of this charter right which all interested in the affairs of the corporation can insist shall be regarded. The appellees, when they contracted with the Missouri corporation, impliedly agreed that if the corporation was dissolved under the Missouri laws, the superintendent of the insurance department of the State should represent the company in all suits instituted by them affecting the winding up of its affairs. Relfe, therefore, became, by operation of law, the successor of the corporation in the litigation these appellees instituted in Louisiana. He was, in legal effect, their only opponent in the suit they had begun, and as he appeared in time and was a citizen of Missouri, representing a Missouri corporation, he was entitled to remove the cause and require citizens of Louisiana to litigate their claims with him in the courts of the United States.

The order of the Circuit Court remanding the suit will, therefore, be reversed, and the record remanded to that court with instructions to proceed according to law as with a pending suit within its jurisdiction by removal; and it is

So ordered.

BLAKE v. UNITED STATES.

134-107
140-245

1. The President has the power to supersede or remove an officer of the army or the navy by the appointment, by and with the advice and consent of the Senate, of his successor.
2. It was not the purpose of the fifth section of the act of July 13, 1866, c. 176 (12 Stat. 92), to withdraw that power.

APPEAL from the Court of Claims.

This suit was instituted in the Court of Claims, by Blake, to recover the amount claimed to be due him, by way of salary as a post-chaplain in the army, from April 28, 1869, to May 14, 1878.

The court below found that, under date of Dec. 24, 1868, Blake, a post-chaplain in the army, stationed at Camp McDowell, Arizona, addressed to the Secretary of War a communication, in which he complained of unjust treatment to which, during several years, he had been subjected by various officers. He asked for the fullest and most thorough investigation of the facts, and concluded: "But if this cannot be done, then I wish to tender to the Honorable the Secretary of War my resignation as a chaplain of the army, and to lay the facts, which I have for years been accumulating with the greatest care, before the church and the country at large." After this letter came to the hands of the post commandant, his attention was called to the mental condition of Blake, and it was suggested that the latter was not responsible for his act in writing the letter. It was, therefore, retained until Dec. 31, 1868, when it was forwarded by the commandant with an indorsement recommending the acceptance of the resignation, and saying, among other things, that "the tenor of this and other communications forwarded will, no doubt, convince the department commander of his utter uselessness in the position he holds."

The letter of Dec. 24, 1868, was forwarded through the district and department headquarters, and, finally, through the headquarters of the military division of the Pacific, to the Secretary of War, by whom it was transmitted to the President, who accepted the resignation, to take effect March 17, 1869. Each of the commanding officers through whose office

the letter passed recommended the acceptance of the resignation.

On March 28, 1869, Blake telegraphed to the delegate in Congress from Arizona, stating that he did not intend to resign, and that if his letter was construed as a resignation, to withdraw it immediately. When the Secretary of War was informed of the telegram, he stated that the resignation had been accepted and was beyond recall.

Blake, having received official notice of such acceptance, addressed the following letter to the Secretary of War: —

"NAPA CITY, CAL., April 27, 1869.

"Hon. JOHN A. RAWLINS,

"*Secretary of War, Washington, D.C.:*

"DEAR SIR, — To my great surprise I was yesterday informed, thro' H'd Q'rs Dep't of California, that my 'resignation' as post-chaplain, U. S. Army, 'had been accepted by the President,' 'to take effect March 17, 1869.'

"As I am not aware of having at any time resigned my commission, and as I am now in a state of feeble health, caused by efficient services in the line of duty in 1863, 1864, and since, I beg that the favorable reconsideration of the President may be given to my case, and that I may be ordered before a retiring board for examination, and to duty if fit for it.

"Justice to the service, no less than to myself and family, after eight years of devoted labors, will not permit me to be silent in view of the wrongs done me at Camp McDowell, A. T., and I am confident that you will not allow me to suffer wrongfully.

"I have the honor to remain, with great respect, your ob'd't servant,

(Signed) "CHARLES M. BLAKE,
"(*Late*) *Post Chaplain, U. S. A.*"

This letter was referred to the adjutant-general, who returned it with this indorsement: —

"Respectfully returned to the Secretary of War, with the paper on which the resignation of Chaplain Blake was accepted. Chaplain Blake appears not to be of sane mind.

"E. D. TOWNSEND, *Adjt.-Genl.*"

On July 7, 1870, the President nominated to the Senate six persons to be post-chaplains in the army, to rank from July 2,

1870; among them was that of "Alexander Gilmore, of New Jersey, *vice* Blake, resigned." Gilmore's nomination was confirmed July 12, 1870, and on the 14th of that month he was commissioned as post-chaplain, to rank as such from July 2, 1870. He has since regularly received his salary and performed his duties as such post-chaplain.

The court further found, that for some time prior to, and on, Dec. 24, 1868, Blake had been suffering from physical disease and mental prostration; that in the light of subsequent events "there can be no doubt he was then insane;" that he was, at times, irritable and incoherent, manifesting egotism and suspicion of his superiors; that not until after the above date were these symptoms developed to such an extent as necessarily to induce persons who came in contact with him to believe he was mentally incapable of acting with sound reasoning purpose; also that, at the date of the telegram to the delegate from Arizona, he was "totally unqualified for business," and at the date of the letter of April 27, 1869, "he was not of sound mind."

It also found that the insanity of Blake continued until about the year 1874.

On Sept. 28, 1878, the President made the following order:

"EXECUTIVE MANSION, Sept. 28, 1878.

"It appearing from the evidence, and from the reports of the surgeon-general of the army and the superintendent of the government hospital for the insane, that Chaplain Blake was insane at the time he tendered his resignation, it is held that said resignation was and is void, and the acceptance thereof is set aside. Chaplain Blake will be ordered to duty, and paid from the date of the resignation of post-chaplain Preston Nash, to wit, May 14, 1878, by which resignation a vacancy was created, which has not been filled. The claim of Chaplain Blake for pay from the date of his resignation to May 14, 1878, during which his successor held the office, discharged its duties, and received pay, is not decided, but is left for the decision of the court, where it is understood to be now pending.

"R. B. HAYES."

Oct. 2, 1878, the following order was issued by direction of the general of the army: —

"HEADQUARTERS OF THE ARMY,
"ADJUTANT-GENERAL'S OFFICE,
"WASHINGTON, Oct. 2, 1878.

"1. It appearing from the evidence presented, and from the reports of the surgeon-general of the army, and the superintendent of the government hospital for the insane, that Post-Chaplain Charles M. Blake, U. S. Army, was insane at the time he tendered his resignation, December 24, 1868, said resignation is, by direction of the President, declared void, and the acceptance of the same in letter from this office, dated March 17, 1869, as announced in Special Orders No. 62, March 17, 1869, from this office, is set aside.

"Chaplain Blake is restored to the list of post-chaplains of the army with his original date of rank, and with pay from May 14, 1878, since which date a vacancy in that grade has existed. He will report in person to the commanding officer, department of Arizona, for assignment to duty.

. . . . . .

"By command of General Sherman.

(Signed) "E. D. TOWNSEND, *Adjutant-General.*"

The court below dismissed the petition, whereupon Blake appealed to this court.

Mr. George H. Williams and *Mr. Ralph P. Lowe*, for the appellant.

Mr. Attorney-General Devens, contra.

MR. JUSTICE HARLAN delivered the opinion of the court.

The claim of Blake is placed upon the ground that before, at the date of, and after the letter addressed to the Secretary of War, which was treated as his resignation, he was insane in a sense that rendered him irresponsible for his acts, and consequently that his supposed resignation was inoperative and did not have the effect to vacate his office. Did the appointment of Gilmore, by and with the advice and consent of the Senate, to the post-chaplaincy held by Blake, operate, *proprio vigore*, to discharge the latter from the service, and invest the former with the rights and privileges belonging to that office? If this question be answered in the affirmative, it will not be necessary to inquire whether Blake was, at the date of the letter of Dec. 24, 1868, in such condition of mind as to enable him to per-

form, in a legal sense, the act of resigning his office; or, whether the acceptance of his resignation, followed by the appointment of his successor, by the President, by and with the advice and consent of the Senate, is not, in view of the relations of the several departments of the government to each other, conclusive, in this collateral proceeding, as to the fact of a valid effectual resignation.

From the organization of the government, under the present Constitution, to the commencement of the recent war for the suppression of the rebellion, the power of the President, in the absence of statutory regulations, to dismiss from the service an officer of the army or navy, was not questioned in any adjudged case, or by any department of the government.

Upon the general question of the right to remove from office, as incident to the power to appoint, *Ex parte Hennan* (13 Pet. 259) is instructive. That case involved the authority of a district judge of the United States to remove a clerk and appoint some one in his place.

The court, among other things, said: "All offices, the tenure of which is not fixed by the Constitution or limited by law, must be held either during good behavior, or (which is the same thing in contemplation of law) during the life of the incumbent, or must be held at the will and discretion of some department of the government, and subject to removal at pleasure.

"It cannot for a moment be admitted that it was the intention of the Constitution that those offices which are denominated inferior offices should be held during life. And if removable at pleasure, by whom is such removal to be made? In the absence of all constitutional provision or statutory regulation, it would seem to be a sound and necessary rule to consider the power of removal as incident to the power of appointment. This power of removal from office was a subject much disputed, and upon which a great diversity of opinion was entertained in the early history of this government. This related, however, to the power of the President to remove officers appointed with the concurrence of the Senate; and the great question was whether the removal was to be by the President alone, or with the concurrence of the Senate, both consti-

tuting the appointing power. No one denied the power of the President and Senate jointly to remove, where the tenure of the office was not fixed by the Constitution; which was a full recognition of the principle that the power of removal was incident to the power of appointment. But it was very early adopted, as the practical construction of the Constitution, that this power was vested in the President alone. And such would appear to have been the legislative construction of the Constitution." 1 Kent, Com. 309; 2 Story, Const. (4th ed.), sects. 1537–1540, and notes; 2 Marshall, Life of Washington, 162; Sergeant, Const. Law, 372; Rawle, Const., c. 14.

During the administration of President Tyler, the question was propounded by the Secretary of the Navy to Attorney-General Legare, whether the President could strike an officer from the rolls, without a trial by a court-martial, after a decision in that officer's favor by a court of inquiry ordered for the investigation of his conduct. His response was: "Whatever I might have thought of the power of removal from office, if the subject were *res integra*, it is now too late to dispute the settled construction of 1789. It is according to that construction, from the very nature of executive power, absolute in the President, subject only to his responsibility to the country (his constituents) for a breach of such a vast and solemn trust. 3 Story, Com. Const. 397, sect. 1538. It is obvious that if necessity is a sufficient ground for such a concession in regard to officers in the civil service, the argument applies *a multo fortiori* to the military and naval departments. . . . I have no doubt, therefore, that the President had the constitutional power to do what he did, and that the officer in question is not in the service of the United States." The same views were expressed by subsequent attorneys-general. 4 Opin. 1; 6 id. 4; 8 id. 233; 12 id. 424; 15 id. 421.

In *Du Barry's Case* (4 id. 612) Attorney-General Clifford said that the attempt to limit the exercise of the power of removal to the executive officers in the civil service found no support in the language of the Constitution nor in any judicial decision; and that there was no foundation in the Constitution for any distinction in this regard between civil and military officers.

In *Lansing's Case* (6 id. 4) the question arose as to the power of the President, in his discretion, to remove a military storekeeper. Attorney-General Cushing said: "Conceding, however, that military storekeepers are officers, or, at least, quasi officers, of the army, it does not follow that they are not subject to be deprived of their commission at the will of the President.

"I am not aware of any ground of distinction in this respect, so far as regards the strict question of law, between officers of the army and any other officers of the government. As a general rule, with the exception of judicial officers only, they all hold their commissions by the same tenure in this respect. Reasons of a special nature may be deemed to exist why the rule should not be applied to military in the same way as it is to civil officers, but the legal applicability to both classes of officers is, it is conceived, the settled construction of the Constitution. It is no answer to this doctrine to say that officers of the army are subject to be deprived of their commissions by the decision of a court-martial. So are civil officers by impeachment. The difference between the two cases is in the form and mode of trial, not in the principle, which leaves unimpaired in both cases alike the whole constitutional power of the President.

"It seems unnecessary in this case to recapitulate in detail the elements of constitutional construction and historical induction by which this doctrine has been established as the public law of the United States. I observe only that, so far as regards the question of abstract power, I know of nothing essential in the grounds of legal conclusion, which have been so thoroughly explored at different times in respect of civil officers, which does not apply to officers of the army."

The same officer, subsequently, when required to consider this question, said that "the power has been exercised in many cases with approbation, express or implied, of the Senate, and without challenge by any legislative act of Congress. And it is expressly reserved in every commission of the officers, both of the navy and army." 8 Opin. 231.

Such was the established practice in the Executive Department, and such the recognized power of the President up to the

passage of the act of July 17, 1862, c. 200 (12 Stat. 596), entitled "An Act to define the pay and emoluments of certain officers of the army, and for other purposes," the seventeenth section of which provides that "the President of the United States be, and hereby is, authorized and requested to dismiss and discharge from the military service, either in the army, navy, marine corps, or volunteer force, any officer for any cause which, in his judgment, either renders such officer unsuitable for, or whose dismission would promote, the public service."

In reference to that act Attorney-General Devens (15 Opin. 421) said, with much reason, that so far as it "gives authority to the President, it is simply declaratory of the long-established law. It is probable that the force of the act is to be found in the word 'requested,' by which it was intended to re-enforce strongly this power in the hands of the President at a great crisis of the State."

The act of March 3, 1865, c. 79 (13 Stat. 489), provides that, in case any officer of the military or naval service, thereafter dismissed by the authority of the President, shall make application in writing for a trial, setting forth, under oath, that he has been wrongfully and unjustly dismissed, "the President shall, as soon as the necessities of the service may permit, convene a court-martial to try such officer on the charges on which he was dismissed. And if such court-martial shall not award dismissal or death as the punishment of such officer, the order of dismissal shall be void. And if the court-martial aforesaid shall not be convened for the trial of such officer within six months from the presentation of his application for trial, the sentence of dismissal shall be void."

Thus, so far as legislative enactments are concerned, stood the law in reference to dismissals, of army or naval officers, by the President, until the passage of the army appropriation act of July 17, 1866, c. 176 (14 Stat. 92), the fifth section of which is as follows:—

"That section seventeen of an act, entitled 'An Act to define the pay and emoluments of certain officers of the army,' approved July seventeenth, eighteen hundred and sixty-two, and a resolution, entitled 'A Resolution to authorize the President to assign the command of troops in the same field, or department, to officers of the

same grade, without regard to seniority,' approved April fourth, eighteen hundred and sixty-two, be, and the same are, hereby repealed. And no officer in the military or naval service shall, in time of peace, be dismissed from the service, except upon and in pursuance of the sentence of a court-martial to that effect, or in commutation thereof."

Two constructions may be placed upon the last clause of that section without doing violence to the words used. Giving them a literal interpretation, it may be construed to mean, that although the tenure of army and naval officers is not fixed by the Constitution, they shall not, in time of peace, be dismissed from the service, under any circumstances, or for any cause, or by any authority whatever, except in pursuance of the sentence of a court-martial to that effect, or in commutation thereof. Or, in view of the connection in which the clause appears, — following, as it does, one in the same section repealing provisions touching the dismissal of officers by the President, alone, and to assignments, by him, of the command of troops, without regard to seniority of officers, — it may be held to mean, that, whereas, under the act of July 17, 1862, as well as before its passage, the President, alone, was authorized to dismiss an army or naval officer from the service for any cause which, in his judgment, either rendered such officer unsuitable for, or whose dismissal would promote, the public service, he alone shall not, thereafter, in time of peace, exercise such power of dismissal, except in pursuance of a court-martial sentence to that effect, or in commutation thereof. Although this question is not free from difficulty, we are of opinion that the latter is the true construction of the act. That section originated in the Senate as an amendment of the army appropriation bill which had previously passed the House of Representatives. Cong. Globe, 39th Congress, pp. 3254, 3405, 3575, and 3589. It is supposed to have been suggested by the serious differences existing, or which were apprehended, between the legislative and executive branches of the government in reference to the enforcement, in the States lately in rebellion, of the reconstruction acts of Congress. Most, if not all, of the senior officers of the army enjoyed, as we may know from the public history of that period, the confidence of the political organization then controlling the

legislative branch of the government. It was believed that, within the limits of the authority conferred by statute, they would carry out the policy of Congress, as indicated in the reconstruction acts, and suppress all attempts to treat them as unconstitutional and void, or to overthrow them by force. Hence, by way of preparation for the conflict then apprehended between the executive and legislative departments as to the enforcement of those acts, Congress, by the fifth section of the act of July 13, 1866, repealed not only the seventeenth section of the act of July 17, 1862, but also the resolution of April 4, 1862, which authorized the President, whenever military operations required the presence of two or more officers of the same grade, in the same field or department, to assign the command without regard to seniority of rank. In furtherance, as we suppose, of the objects of that legislation, was the second section of the army appropriation act of March 2, 1867, c. 170 (14 Stat. 486), establishing the headquarters of the general of the army at Washington, requiring all orders and instructions relating to military operations issued by the President or Secretary of War to be issued through that officer, and, in case of his inability, through the next in rank, and declaring that the general of the army "shall not be removed, suspended, or relieved from command, or assigned to duty elsewhere than at said headquarters, except at his own request, without the previous approval of the Senate, and any orders or instructions relating to military operations issued contrary to the requirements of this section shall be null and void; and any officer who shall issue orders or instructions contrary to the provisions of this section shall be deemed guilty of a misdemeanor in office," &c.

Our conclusion is that there was no purpose, by the fifth section of the act of July 13, 1866, to withdraw from the President the power, with the advice and consent of the Senate, to supersede an officer in the military or naval service by the appointment of some one in his place. If the power of the President and Senate, in this regard, could be constitutionally subjected to restrictions by statute (as to which we express no opinion), it is sufficient for the present case to say that Congress did not intend by that section to impose them. It is, in substance and effect, nothing more than a declaration, that the

power theretofore exercised by the President, without the concurrence of the Senate, of summarily dismissing or discharging officers of the army or the navy, whenever in his judgment the interest of the service required it to be done, shall not exist, or be exercised, *in time of peace*, except in pursuance of the sentence of a court-martial, or in commutation thereof. There was, as we think, no intention to deny or restrict the power of the President, by and with the advice and consent of the Senate, to displace them by the appointment of others in their places.

It results that the appointment of Gilmore, with the advice and consent of the Senate, to the office held by Blake, operated in law to supersede the latter, who thereby, in virtue of the new appointment, ceased to be an officer in the army from and after, at least, the date at which that appointment took effect, — and this, without reference to Blake's mental capacity to understand what was a resignation. He was, consequently, not entitled to pay as post-chaplain after July 2, 1870, from which date his successor took rank. Having ceased to be an officer in the army, he could not again become a post-chaplain, except upon a new appointment, by and with the advice and consent of the Senate. *Mimmack* v. *United States*, 97 U. S. 426.

As to that portion of the claim covering the period between April 28, 1869, and July 2, 1870, it is only necessary to say that, even were it conceded that the appellant did not cease to be an officer in the army by reason of the acceptance of his resignation, tendered when he was mentally incapable of understanding the nature and effect of such an act, he cannot recover in this action. His claim for salary during the above period accrued more than six years, and the disability of insanity ceased more than three years before the commencement of this action. The government pleads the Statute of Limitations, and it must be sustained. Congress alone can give him the relief which he seeks.

Judgment affirmed.

EX PARTE BURTIS.

This court cannot, by *mandamus*, compel an inferior court to reverse its decision made in the exercise of its legitimate jurisdiction.

108 236
L.ed 392
147 490
108 238
L.ed 392
150 156

PETITION for a writ of *mandamus*.

Mr. A. J. Todd in support of the petition.

MR. CHIEF JUSTICE WAITE delivered the opinion of the court.

This is a petition for a *mandamus* requiring the district judge for the eastern district of New York to compel one Eliza M. Shepherd to obey the command of a *subpœna duces tecum*, and produce before a special examiner certain iron patterns of an old fire-place heater, that testimony might be taken respecting them, to be certified and used on the hearing of an equity cause pending in the Circuit Court for the Southern District of New York. From the petition it appears that the judge has already acted on the identical showing made to us, and for reasons assigned in writing denied a motion for an attachment against the person named for refusing to obey the subpœna.

A writ of *mandamus* may be used to compel an inferior tribunal to act on a matter within its jurisdiction, but not to control its discretion while acting (*Ex parte Railway Company*, 101 U. S. 711), nor reverse its decisions when made. *Ex parte Flippin*, 94 id. 348. Both these rules are elementary, and are fatal to this application. The district judge took jurisdiction of the matter, as it was his duty to do, heard the parties, and decided adversely to the claim of the petitioner. In this he may have done wrong, and the reasons he has assigned may not be such as will bear the test of judicial criticism; but we cannot, by *mandamus*, compel him to undo what he has thus done in the exercise of his legitimate jurisdiction. He was asked to punish a person for contempt in disobeying the process of the court. He decided not to do so. This action of his is beyond the reach of a writ of *mandamus*.

Petition denied.

THE "BENEFACTOR."

STEAMSHIP COMPANY *v.* MOUNT.

44 f. 365

103 239
L.ed 351
147 34

103 239
L.ed 351
52f 336

1. A ship-owner who, on the trial of the issue as to the cause of collision, contests all liability whatever, is not thereby precluded from claiming the benefit of the limitation of liability provided by sect. 4283 of the Revised Statutes.
2. After such trial, a decree declaring his ship to be in fault, and fixing the damages which the respective libellants sustained, is *res judicata*, and, until reversed, must stand as the basis for determining their *pro rata* share of the fund substituted by stipulation for the ship and freight. On filing his petition for limited liability, the libellants, until final action shall be had thereon, should be restrained from enforcing the decree.
3. *Semble*, that the stipulation on filing that petition should be for the value of the ship after the collision, with the addition thereto of the freight then pending, it not appearing that her value was subsequently diminished.
4. Proceedings for a limitation of liability, if not instituted until after a party has obtained satisfaction of his demand, are ineffectual as to him. A return of the money should not be compelled, nor, in general, should relief be granted, except upon condition of compensating the party for any costs and expenses to which he may have been subjected by reason of the delay of the ship-owner in claiming the benefit of the statute.
5. The court, in reversing the decree of the Circuit Court, directs that court to proceed upon the petition for limited liability, and promulgates a rule that such a petition shall be hereafter filed in the Circuit Court when the case is there pending.

APPEALS from the Circuit Court of the United States for the Eastern District of New York.

The facts are stated in the opinion of the court.

Mr. Cornelius Van Santvoord for the appellant.

Mr. Franklin A. Wilcox and *Mr. Robert D. Benedict*, *contra*.

MR. JUSTICE BRADLEY delivered the opinion of the court.

On the 26th of February, 1875, a collision occurred off the coast of New Jersey, in the vicinity of Squam Beach, between the schooner "Susan Wright" and the steamship "Benefactor," which resulted in the sinking of the former with a total loss of vessel and cargo. Soon afterwards a libel was filed against the steamer in the District Court of the United States for the Eastern District of New York, at the suit of the owners of the schooner for the loss of their vessel; and a separate

libel at the suit of the crew for the loss of their personal effects; and pending the proceedings on these libels, a petition of intervention was filed by the owners of the schooner's cargo to recover the value of the same. The steamer being attached, was duly appraised and her value fixed at $40,000, and the appellants, the New York and Wilmington Steamship Company, having appeared as claimants and owners thereof, an order was made granting them leave to give a stipulation, with sufficient sureties, in said appraised value of the steamer, and directing that said stipulation should be for the benefit of the libellants in both of said suits (in case they should establish the liability of the steamship), and of all persons and parties who might, by due proceedings in the court, show themselves entitled to liens upon her by reason of said collision; and that upon giving such stipulation the steamer should be discharged from all liability. A stipulation was filed by the claimants in pursuance of this order, and the steamer was thereupon discharged.

The claimants then filed answers to each of the libels, denying that the steamer was in fault, and denying all liability by reason of the collision. Upon the issue thus formed proofs were taken by the parties. On the twenty-first day of April, 1876, the District Court adjudged the steamer to have been in fault, and the damages of the libellants and intervenors were assessed, amounting in the aggregate to $61,810.49. The suits were then consolidated, and on the twenty-first day of October, 1876, a decree was rendered in favor of the libellants and intervenors for the several amounts awarded to them respectively, and directing the claimants and their sureties to pay into the registry of the court the amount of their stipulation; namely, $500 for costs, and $40,000 and the interest thereon for the value of the steamer. The decree further directed that unless an appeal should be taken within the time limited by law, the clerk should distribute the proceeds of said stipulation among the libellants and co-libellants in proportion to their several recoveries. From this decree an appeal was taken to the Circuit Court.

It thus appearing that the damages of those interested in the schooner and her cargo exceeded the value of the steamer, and

she being condemned by the court of first instance as being in fault for the collision, the claimants, on the fifteenth day of February, 1877, filed a petition in the said District Court under the fifty-fourth Rule in Admiralty, claiming the benefit of limitation of liability provided for in sect. 4283 of the Revised Statutes.

In this petition the claimants allege, as required by the act, that the collision happened and the loss and damage occurred without their privity or knowledge. They then state the fact of the filing of the libels before mentioned, and the proceedings which took place thereon; and restate the facts and circumstances on which they relied in their answers to the libels for exemption from all liability. They then state that they desire to contest their liability and that of the steamship for the damage occasioned by the collision, and also to claim the benefit of limitation of liability provided for by sect. 4283 of the Revised Statutes. They further state that the freight pending at the time of the collision was $1,220.32; and they tender themselves ready and willing and offer to give a stipulation with sureties in the value of the steamship and freight for the payment thereof into court whenever it should be so ordered. They also offer to admit in evidence, at the proper time, the depositions and proofs taken in the libel suits. Then, having stated the fact that the damages were assessed in said suits to an amount greatly exceeding the value of the steamship and freight pending, they pray for an order permitting them to give the stipulation proffered; and that, if it shall be ultimately adjudged that the steamship is liable, a monition may issue against all persons claiming any damage from the collision, citing them to appear before the court and make proof of their claims before a commissioner to be designated for that purpose; and for a final decree that the amount of the stipulation (after payment of costs and expenses) be divided *pro rata* among the claimants, and that upon payment thereof the steamship and the petitioners be for ever discharged from further liability; and that an order be made to restrain the libellants in the other suits from further prosecuting the same, and that the court proceed to hear and determine the liability of the petitioners upon the testimony taken on the trial of those suits; and that they may

have the benefit of appeal from any decree to be made, without giving further or other security than that required by the said act limiting their liability; and that the testimony taken as aforesaid be used on said appeal as though originally taken in this proceeding; "and that they may have and receive such other and further order in the premises as in equity they may be entitled to receive."

A copy of this petition, with notice of an application for an order restraining the libellants in the first suits from the further prosecution thereof, being served upon said libellants, they filed three exceptions to the petition; the first of which was overruled. The second and third were as follows: —

"*Second*, For that the said two suits of William H. Mount and others, and William Hirst and others, against the said steamship 'Benefactor,' having been tried upon the merits, and submitted and determined, and the final decree, a copy whereof is annexed to the said petition, having been entered in the suit formed by the consolidation of such two suits, before the filing of the petition herein; and no other suit or proceeding, for any loss, damage, destruction, or injury occasioned by said collision, having been commenced, and it not being alleged or claimed that any other persons or parties than the libellants in said two suits (being the libellants in said consolidated suit) have any claims for loss, damage, destruction, or injury occasioned by said collision, but the contrary thereof appearing upon the face of said petition, the petitioner is not entitled to the relief sought in and by its said petition.

"*Third*, For that the facts stated in said petition show that the relief sought thereby cannot now be granted by this court."

The district judge not only denied the motion for a restraining order, but, upon the exceptions taken, dismissed the petition; and, on appeal to the Circuit Court, this decree was affirmed. The ground of dismissal relied on by the district judge (which was adopted by the Circuit Court) was that the petition came too late, inasmuch as it was not filed until after a trial of the cause of collision upon its merits and a final decree thereon. The judge referred to the fifty-sixth admiralty rule, which declares that in proceedings to obtain a decree for a

limited liability, the owners may contest all liability on their part or that of their vessel, as well as claim a limitation of liability under the statute; provided, that in their libel or petition they shall state the facts and circumstances by reason of which exemption from liability is claimed. He supposes that this right to contest the case on the merits at the same time and in the same proceedings that a limited liability is claimed, implies that such proceedings must be instituted before the case has been tried on its merits; because a second trial of the same matter, after it has once been adjudicated, will not be deemed to have been contemplated by the rule. In supposing that a second trial of the merits, between the same parties, was not contemplated by the rule, the judge was correct. But it was certainly not the intention of the admiralty rules to preclude a party from claiming the benefit of a limited liability after a trial of the cause of collision. The fifty-sixth rule was merely intended to relieve ship-owners from the English rule of practice, which requires them, when they seek the benefit of the law of limited liability, to confess the ship to have been in fault in the collision. This was deemed to be a very onerous requirement; for in many, if not in most cases, it is extremely doubtful which vessel, if either, was in fault; and to require the owners of either to confess fault before allowing them to claim the benefit of the law, would go far to deprive them of its benefit altogether. Hence this court, in preparing the rules of procedure for a limitation of liability, deemed it proper to allow a party seeking such limitation to contest any liability whatever. But this rule of procedure was not intended to abrogate, and indeed could not abrogate, the rule of law, that *res judicata*, or a matter once regularly decided between parties in a competent tribunal, cannot be again opened by either of them except in an appellate proceeding. Of course, therefore, the rule of procedure allowing a contestation of all liability is subordinate to this rule of law, and cannot apply where the question of general liability has already been adjudicated. Nor, in such case, can the proceedings for a limitation of liability prevent the due course of appeal in the primary cause of collision; though, by the exercise of the court's authority, they may prevent the parties from attempt-

ing, by execution, or other process, to collect any moneys recovered by them beyond the amount awarded in the said proceedings. The amount recovered, whether before the limitation proceedings are commenced, or afterwards, and whether in the court of first instance, or an appellate court, will stand as the recoverer's basis for *pro rata* division when the condemned fund is distributed. In all other respects the proceedings for obtaining a limitation of liability may proceed in ordinary course. If suit against the vessel or the owners has been commenced and evidence has been taken, though no trial had, it will be in the discretion of the court to require that such evidence shall be received and used in the limitation proceedings. The flexibility of admiralty proceedings will enable the court, in most cases, so to shape their course as to attain justice between the parties.

But since the statute is imperative, that where a loss occurs in a vessel by embezzlement or by collision or other thing, without the privity or knowledge of the owner, his liability "shall in no case exceed the amount or value of his interest in the vessel and her freight then pending," it would be a questionable exercise, by this court, of its power to regulate the proceedings, if, by such regulation, it should prevent a party from having the benefit of the law unless he took initiatory steps for that purpose before it appeared that he was liable at all. Such was not the intention of the rules adopted in 1872. Admiralty Rules, 54–57. They were intended to facilitate the proceedings of the owners of vessels for claiming the limitation of liability secured by the statute without regard to the time when such proceedings might be commenced, or whether before or after the general liability should be fixed. To require such proceedings to be commenced before a trial of the cause of collision would in many cases work injustice. In addition to the reasons already adverted to, it may be added that the owners of the vessel found in fault may often not know the amount of damage and loss sustained by the other vessel and her cargo. It may greatly exceed their expectations, and, contrary to what was originally known or supposed, may turn out to be much greater than the value of their own vessel and the freight pending thereon.

The institution of proceedings for a limitation of liability must, however, be subject to some limitations growing out of the nature of the case. They must be regarded as ineffectual as to any specific party if not undertaken until after such party has obtained satisfaction of his demand. The doctrine of laches, as applied in admiralty courts, would be properly applicable to such a case. The court would justly refuse its aid in compelling a return of money received. But the omission to take the benefit of the law in reference to a particular party ought not to preclude the owners of a ship from claiming its benefit as against other parties suffering loss by the same collision. There may be many persons who have sustained but trifling losses which the owners may be perfectly willing to pay; whilst, at the same time, they may have just ground for resisting the claims of others. In such cases, a concession to the demands, or a failure to resist the claims, of one party, ought not to conclude them as against the demands of other parties.

Precisely when the owners of a ship in fault ought to be regarded as precluded from instituting proceedings for a limitation of liability might be difficult to state in a categorical manner. Perhaps they can never be precluded so long as any damage or loss remains unpaid. But in a particular case relief should not be granted except upon condition of compensating the other party for any costs and expenses he may have incurred by reason of the delay in claiming the benefit of the law.

But it is unnecessary to pursue the subject further. Each case as it arises will suggest the proper course to be pursued therein.

The petition for relief in the present case was justly liable to exception so far as it sought to retry the question of fault and general liability as between the petitioners and the parties in the libel suits. That question was determined by the decree made upon the libels which had been filed; which decree could only be reviewed on appeal. But so far as the petition sought a limitation of the owners' liability to the value of the ship and freight, it was free from objection and ought to have been sustained; and the libellants and intervenors ought to have

been restrained, by order of the court, from collecting or attempting to collect or enforce their respective decrees, whether obtained in that court or in the court of appeal, in any other manner than by the *pro rata* distribution of the fund standing by stipulation in place of the ship and freight.

A question has been raised by the counsel for the appellees, whether the appraisement of the value of the steamship, made at the time she was libelled, is sufficient for the purposes of the proceeding to obtain limitation of liability. The court below having dismissed the petition, did not pass upon this question; and, therefore, it is not essential that we should express an opinion in reference to it at this time. But since the petitioners specifically pray that the court will order and direct that they be permitted to give a stipulation in the sum of $41,220.32, which is precisely the amount of the former stipulation in the libel suits, with the addition of the freight pending, it may be advisable that we should indicate our views on the subject. The counsel for the appellees is mistaken in supposing that the value of the offending vessel at the time of the collision furnishes the only criterion of the amount for which her owners are liable. In *Norwich Company* v. *Wright* (13 Wall. 104) we held that the owners of the offending vessel could, under the statute, discharge themselves from personal liability by surrendering the ship and freight. This would imply that the value of the ship at the time of surrender (with the addition of the pending freight), if the surrender is made in a reasonable time, would furnish a proper criterion of the amount of liability. In the case cited it was also said (p. 124) that, "if the vessel were libelled and either sold or appraised, and her value deposited in court, this sum, together with the amount of freight (when proper to be added), would constitute the *res* or fund for distribution." In England, the value of the vessel immediately before the collision was regarded as the true criterion of liability. But the English law is different from ours. It makes the owners liable to the extent of the value of the ship at the time of the injury, even though the ship itself be lost or destroyed at the same time; whereas our law, following the admiralty rule, limits the liability to the value of the ship and freight after the injury has occurred; so that if the ship

is destroyed the liability is gone; and, whether damaged or not damaged, the owners may surrender her in discharge of their liability.

What may be the rule if, after the collision has occurred, the offending vessel should meet with other disasters greatly impairing her value, is a question which may require further consideration when the case arises. Nothing of the kind is alleged in the present case.

It seems to us, therefore, that the District Court, unless it has some cause to believe that the former valuation was unfairly made, may adopt that valuation in the proceedings for a limitation of liability.

The decree of the Circuit Court will be reversed, and the record remanded with directions to enter a decree reversing the decree of the District Court, and giving directions for further proceeding in accordance with this opinion; and it is

So ordered.

Motions having been made to modify the judgment and mandate, Mr. JUSTICE BRADLEY at a subsequent day of the term delivered the opinion of the court.

Since deciding these cases and issuing mandates therein, both parties have applied for additional directions with regard to further proceedings in the court below. The respondents ask that the judgment and mandate in the second case be amended so as to direct that further proceedings for securing a limited liability of the appellants shall be had in the Circuit Court instead of the District Court. It is undoubtedly the general rule that an appeal in admiralty, like all appeals derived from the practice of the civil law, carries the whole cause to the appellate court, in which it is to be tried anew upon the same and such additional proofs as the parties may propound. Whilst this is the general rule, there is also no doubt that the legislature may authorize the appellate court, after hearing the cause, and determining the questions raised therein, to remand it to the court *a quo* for further proceedings. The late practice under the bankrupt law exhibited an instance of this mode of proceeding. The entire history of appeals in admiralty as well as in equity, in this court, is another instance of the same practice.

But on appeals in admiralty from the District to the Circuit Court, the latter has always retained the cause for trial and final disposition without remanding to the District Court. But in the late revision of the statutes of the United States it is declared as follows: "A circuit court may affirm, modify, or reverse any judgment, decree, or order of a district court brought before it for review, or may direct such judgment, decree, or order to be rendered, or such further proceedings to be had by the District Court, as the justice of the case may require." Rev. Stat., sect. 636. The question whether the cause should be retained by the Circuit Court or remanded to the District Court was not raised on the argument, and in entering judgment we directed the Circuit Court to reverse the decree of the District Court and give directions for further proceedings, in conformity with our opinion. The respondents now suggest that this direction could not properly be made, because, as they contend, that section does not extend to admiralty proceedings. In this, however, we think that they are mistaken. It follows several other sections which give the right of appeal and writ of error respectively in admiralty and other cases from the District to the Circuit Court, and makes no distinction between them in conferring upon the latter the power to affirm, modify, or reverse, together with power to give directions to the District Court for further proceedings. It is a re-enactment of a clause in the second section of the act of June 1, 1872, c. 255, entitled "An Act to further the administration of justice" (17 Stat. 196); and in that act its application seems to be general to all appeals from the District to the Circuit Court.

But whilst this seems to be the law, — namely, that the Circuit Court, after hearing a cause on appeal, has power to remand with directions, — it may not be advisable to resort to it in ordinary cases where the Circuit Court can as well dispose of the whole case. As we had already established rules for regulating the proceedings in the district courts upon petitions for the benefit of a limited liability under the act of 1851, we supposed it would be more convenient to continue the further proceedings in that court. Our attention, however, having been more particularly called to the circumstances of this case, we think

it possible that the rights of the parties may be better preserved by continuing the cause in the Circuit Court. We have deemed it advisable, therefore, to alter our judgment in this respect, and to prepare a general rule, which we shall now announce, extending to the circuit courts on appeal the regulations which have heretofore been adopted for the district courts in cases of proceeding to obtain the benefit of a limited liability under the act. We make this general rule in order to obviate all objections as to the ability of the Circuit Court to proceed.

A question has been made whether, under our decisions in these cases, proceedings ought to be stayed on the decree of the respondents against the steamship "Benefactor," her claimants and stipulators, until the determination of the proceedings on the petition for limited liability. We have no hesitation in saying that they ought to be so stayed. Our opinion was very clearly expressed, in deciding the limited liability case, that the petitioners were not too late to obtain relief, and that proceedings to collect any decrees rendered against them should be stayed. We held that such decrees would have the effect of *res judicata* on the question of the liability of the steamship, and as to the amount of damage sustained by the libellants; and that the amount of the decrees would stand as the basis for determining the *pro rata* share of the libellants in the common fund to be distributed on the termination of the limited liability proceedings. We do not well see how our views could have been misunderstood on this point.

It is not necessary, or proper, at this time, to pass upon the question whether the appellants, when called upon to pay the amount of their stipulation into court, will be liable to pay interest thereon or not; nor whether they will be liable to pay the costs of the libellants in addition to the value of the steamship; nor whether the Circuit Court may or may not require them to pay the value of the said ship into court, or give a new bond, before the termination of the limited liability proceedings. Should the future action of the Circuit Court on any of these points be brought before us on appeal, it will be time enough then to give them the proper consideration.

The order of the court upon the several applications now

submitted will be, that the former judgment and mandate of this court in the case arising upon the petition of the appellants, the New York and Wilmington Steamship Company, for the benefit of a limited liability, be, and they are hereby, modified so far as they contain directions to the Circuit Court to enter a decree reversing the decree of the District Court and giving directions for further proceedings; and that instead of said portion of the said judgment and mandate, directions be, and they are hereby, given to the Circuit Court to proceed upon the petition of the said New York and Wilmington Steamship Company for such limited liability, and hear and determine the same, in conformity with law and the opinion of this court, in the mean time staying proceedings upon any and all decrees or judgments against the steamship "Benefactor" by reason of the collision referred to in said petition until the proceedings for limited liability be determined, and to answer the determination of the same. It is further ordered that each party pay their own costs on these motions.

SHARP v. STAMPING COMPANY.

Letters-patent No. 79,989, granted July 14, 1868, to Hiram Y. Lazear, for an improvement in gas-heaters, are valid.

APPEAL from the Circuit Court of the United States for the District of Massachusetts.

The facts are stated in the opinion of the court.

Mr. Arthur v. Briesen for the appellant.

Mr. J. L. S. Roberts, contra.

MR. JUSTICE WOODS delivered the opinion of the court.

On July 14, 1868, letters-patent No. 79,989 were granted to one H. Y. Lazear for an improved apparatus for broiling steak by gas. This patent was transferred by the assignment of the

patentee to one W. Phillips, who, by another assignment, transferred it to James L. Sharp. The invention was represented and described as an upright cylinder or closed casing of sheet-metal, with a lid for closing the top, and with an open bottom. The diameter of the open bottom was traversed by a V-shaped horizontal trough, dividing it into two equal openings, through which the flame of a gas-stove, over which the apparatus was placed, might enter in two equal sheets. The trough was filled with plaster of Paris or other good non-conductor of heat, and upon this non-conductor the dripping-pan was placed for receiving the juices of the meat. The steak was clasped in a wire broiler, which was placed in the cylinder or closed casing in a vertical position, with its lower end resting in the dripping-pan, the two flat sides of the meat being equally exposed to the two sheets of flame which entered the lower end of the cylinder in the manner stated. The object was to produce an apparatus in which both sides of the meat might be cooked equally and at the same time, and in which the drippings from the meat might be caught in a pan, where it would be protected from the injurious effects of the heat. The latter object was obtained by the non-conductor filling upon which the drip-pan rested, and which filled the V-shaped trough. The trough served to contain the filling and support the pan, and to divide the flame into two equal sheets, which ascended along the sides of the steak.

The first and third claims of the patent were thus stated: —

"1. The V-shaped trough E and the filling E′, by which the flame is divided, and the grease protected from burning, and smoke thereby prevented, substantially as described, in combination with a gas steak-broiler."

"3. An apparatus for broiling steak by gas, whereby the steak is broiled or cooked simultaneously on both sides, or where the sides are equally exposed to the flame and heat, substantially as shown and described."

On May 3, 1876, Sharp filed the bill in this case. He claimed to be the sole owner of the letters-patent issued to Lazear, and charged that the defendant, the Dover Stamping Company, had unlawfully and wrongfully made, used, and sold, and was making, using, and selling, large quantities of

gas-heaters, such as were described and claimed in the letters-patent, in infringement of them and in violation of his exclusive privilege.

The bill prayed that the defendant might be compelled to account for and pay over all gains and profits derived from the infringement of the patent, and for a perpetual injunction restraining it from making, using, or vending gas-heaters embodying the invention described in the letters-patent claimed by complainant.

Upon final hearing in the Circuit Court the bill was dismissed. Sharp thereupon brought the case here by appeal.

It is conceded by the defendant that the gas-heaters manufactured by it embody the invention claimed in letters-patent issued to Lazear. The defence relied on is that Lazear "was not the original and first inventor of the whole or any substantial or material part of the things set forth and claimed as new in said letters-patent, but that prior to said alleged invention thereof the same had been described and set forth in the following specified letters-patent of the United States, and known to and used by the several patentees therein named, at the places of their respective residences, that is to say: No. 28,781, dated June 19, 1860, and granted to William F. Shaw, of Boston, Massachusetts; No. 38,018, dated March 24, 1863, and granted to James M. Dick, of Buffalo, New York; and No. 66,911, dated July 16, 1867, and granted to D. C. Teller, of Terre Haute, Indiana."

Dick's patent was not introduced in evidence, but Shaw's and Teller's were.

The apparatus described in the Teller patent was a cylindrical vessel, having a central opening in the bottom, and an annular opening around the central opening, and a series of vertical wires or rods inserted in the annular bottom that intervened between the two openings. An inverted conical deflector was suspended in the central space from above.

The claim of Teller's patent was thus stated: —

"The vertical position in which the steaks are placed over the fire, and the arrangement of the vertical rods EE, all substantially enclosed with the cap C, as specified for the purposes in the specifications."

It is clear that this contrivance did not anticipate the invention of Lazear. It had no V-shaped trough, filled with a non-conducting substance, nor the dripping-pan referred to and claimed in his letters-patent, nor anything resembling it. It was not adapted to be used with a removable wire broiler, and did not evenly distribute the flame along two sides of the steak. In short, it did not in any manner embody or anticipate the first and third claims of those letters.

The Shaw patent shows an apparatus for broiling or roasting by gas. Its character is thus generally described by the inventor in his specification: —

"The nature of my invention consists in the arrangement of the steak-holder, the heating-chambers, and the burner or burners. Also in the arrangement of two deflectors in the heating-chamber, and with respect to the burner or burners and the steak-holder, when arranged as specified."

It consisted of a heating or broiling chamber, whose front vertical side could be removed, and was constructed as a thin, hollow box attached to a drip-pan or gravy-receiver. Against and alongside the inner face of the said cover, and within the heating-chamber, a steak-holder was placed, composed of two wire frames, hinged or connected together at or near one edge of each and furnished with handles. When a steak or other food was to be cooked in the apparatus, it was placed in the steak-holder. In the bottom of the cooking-chamber there was a long opening under which the gas-burners were placed. Over this opening was arranged an inclined deflecting-plate, which extended across the heating-chamber from end to end.

In the upper part of the heating-chamber, and over the deflecting-plate above mentioned, was arranged another deflecting-plate. By means of thin deflectors and the arrangement of the steak-holder, the broiler-chamber and the burners, the inventor claimed to be able to obtain a more equal distribution of the heat within the heating-chamber, with less liability of burning the steak and a better chance of collecting the gravy, than when the steak-holder was placed horizontally over the burners.

The claims of the inventor were thus stated: —

"I claim the arrangement of the steak-holder, the broiling-chamber, and the burner or burners.

"Also the arrangement of the two deflectors within the heating-chamber, and with respect to the burner or burners and the steak-holder when arranged as specified.

"Also the combination of the closed air-chamber or space in the cover with the steak-holder and heating-chamber arranged as specified.

"Also the combination of the vertical side or cover with the steak-holder and drip-pan, said side or cover having a closed air-chamber or space, as specified and shown in drawings."

It requires no discussion to show that this is not an anticipation of the Lazear patent. The Shaw patent does not describe or claim what is shown and claimed in the first and third claims of the Lazear patent.

It has no V-shaped trough, filled with plaster of Paris or other non-conductor of heat, by which the flame is divided and the grease protected from burning.

It is not an apparatus for dividing the flame so that the sides of the steak may be equally exposed thereto, and the steak thus broiled simultaneously and equally on both sides. On the contrary, the flame is not divided at all, and whatever flame reaches the side of the steak next to the removable vertical cover, does so by impinging against the upper deflector, and then passing over the top of the steak-holder and descending between the steak and the removable vertical cover.

The evidence makes it clear that this contrivance is not capable of broiling a steak equally and simultaneously on both sides, the lower deflector causing the lower part of the steak to remain raw while the upper part is burned, and the side next the removable vertical cover is left raw.

We can find nothing in this invention which anticipates the claims of the Lazear patent.

To sustain the averment in the answer, of want of novelty in the apparatus described in the Lazear patent, the defendant has introduced an apparatus called Shaw's Cooker, which he alleges was designed and manufactured and sold by Shaw as early as 1856.

This consisted of an upright cylindrical heating-chamber with a round hole in the bottom. Under this hole the gas-burners were placed. To direct the flames the hole was partially filled by a cone-shaped disc, which filling the central portions of the hole left an annular open space next its outer edge through which the flames could enter the heating-chamber. The flames, therefore, entered the heating-chamber in the form of a cylinder. The steak or other meat to be cooked was suspended from hooks fastened to the cover of the cooking-chamber.

The cone-shaped disc which partially occupied the opening in the bottom of the cooking-chamber was filled with plaster of Paris and hard-coal ashes. The drip-pan was placed over the disc on legs or supports which allowed a passage of air under the drip-pan. The meats were suspended over the pan.

This apparatus was not contrived to accomplish the ends which Lazear's letters-patent had in view, nor was it an equivalent of his apparatus. Instead of dividing the volume of flame into two sheets, by which a steak could be broiled simultaneously on both sides, both sides being equally exposed to the flame and heat, it admitted the flames to the cooking-chamber in the form of a hollow cylinder. The steak, therefore, suspended from the top of the cooking-chamber would not be equally exposed to the flame and heat. The edge of the steak would be cooked more rapidly than the other portions.

It is evident, and the testimony sustains this view, that Shaw's contrivance was a gas cooking-stove for cooking food of various kinds, — particularly joints of meat and fowls. It was not specially intended or adapted for cooking steaks in the way in which that process was accomplished by Lazear's apparatus.

Nor was the dripping-pan contrived to secure the ends for which the Lazear patent was designed. The dripping-pan being elevated on legs or supports above the disc, left a space underneath, which the flames would fill, and thus allow the juices of the meats to be burned, a result which was averted by the Lazear patent. That left no space between the drip-

pan and the V-shaped trough filled with plaster of Paris or other non-conductor of heat. The fact that its bottom rested upon the plaster of Paris protected the juices of the meat from the action of the flames.

Upon a consideration of all the evidence we are satisfied that the invention of Lazear was new and original, and had not been anticipated by the patents of Teller or Shaw, or the gas-stove made by Shaw in 1856.

The invention, it is admitted, has been infringed by the defendant. The evidence places its utility beyond question. Being novel and useful, and protected by the letters-patent issued to Lazear, the defendant should account to the complainant for the gains and profits derived by it from the infringement of the Lazear patent.

As the Circuit Court dismissed the bill, the decree must be reversed and the cause remanded for further proceedings in conformity with this opinion.

So ordered.

WEIGHTMAN v. CLARK.

1. This court concurs in opinion with the Supreme Court of Illinois that sect. 5 of art. 9 of the Constitution of that State of 1848 (*infra*, p. 257) imposes a limitation on the power of the legislature to authorize taxation by the municipal corporations or the political subdivisions of the State.
2. A congressional township is by the laws of Illinois merely a corporation for school purposes. It cannot, therefore, subscribe for stock in a railroad company, and issue its bonds in payment, nor levy a tax upon persons and property within its jurisdiction, to aid in building railroads.

APPEAL from the Circuit Court of the United States for the Southern District of Illinois.

The facts are stated in the opinion of the court.

Mr. Henry Flanders and *Mr. R. J. C. Walker* for the appellants.

Mr. John I. Rinaker, contra.

MR. CHIEF JUSTICE WAITE delivered the opinion of the court.

By the Constitution of Illinois, adopted in 1848, counties were recognized as existing political subdivisions of the State, and the General Assembly was authorized to provide by a general law for a township organization, under which any county might come, whenever a majority of the voters should, at any general election, so determine. If a county did adopt a township organization, the management of its fiscal affairs by the county court might be dispensed with, and the business of the county transacted in such manner as the General Assembly should provide. Art. 7, sect. 6. Under the authority of this provision of the Constitution, an act was passed by the General Assembly authorizing such an organization, by which townships could be established and made bodies corporate, with certain defined governmental powers. Gross, Stat. 1869, p. 741.

By another statute each congressional township in the State was "established a township for school purposes." Id., p. 691. The business of such a township was to be done by three trustees, to be elected from time to time by the legal voters of the township, and who were made "a body politic and corporate, by the name and style of 'trustees of schools of township ——, range ——,' according to the number." The powers of these trustees related exclusively to the business of the public schools in the township. They had authority to lay off the township into school districts and apportion the school funds, and were charged with certain other duties connected with school affairs and school lands within their jurisdiction. They had no power to levy taxes. That was to be done by the directors of the several school districts which should be created.

Art. 9, sect. 5, of the Constitution of 1848 is as follows:—

"The corporate authorities of counties, townships, school districts, cities, towns, and villages may be vested with power to assess and collect taxes for corporate purposes; such taxes to be uniform in respect to persons and property within the jurisdiction of the body imposing the same. And the General Assembly shall require that all the property within the limits of municipal corporations, belonging to individuals, shall be taxed for the payment of debts contracted under authority of law."

The Illinois Farmers' Railroad Company was incorporated Feb. 28, 1867, and by an amendment to its charter, passed April 15, 1869, the following provisions were made: —

"SECT. 2. It shall be lawful for the corporate authorities of the towns, townships, cities, and counties through which said road shall pass, to take stock in the said company; and shall also be empowered to make assessments, levy taxes, and collect the same in the manner in which the said several towns, townships, cities, and counties assess and collect taxes, for the purpose of paying the said assessments on the subscriptions to the said stock or the interest accruing thereon, and the said towns, townships, cities, and counties may issue bonds, bearing interest, at any point they may designate, either within or without the State of Illinois, at a rate not exceeding ten per cent per annum, payable annually or semi-annually, as they may elect: *Provided*, that the said townships, cities, or towns shall not subscribe to the stock of the said company without submitting the said proposed subscription to a vote of the legal voters of their respective towns, townships, or cities, thirty days' notice of which shall be given, elections held and returns made as provided by the general election laws of this State: *And provided further*, that no such bonds shall issue, nor shall any interest be payable thereon or accrue, until said road is completed through the said town, township, city, or county: *And provided further*, that the subscriptions on the part of the said counties shall not be for a sum exceeding two thousand dollars per mile of the line of the said road in the said counties.

"SECT. 3. In counties not under township organization it shall be lawful for the trustees of schools to make subscriptions for their respective townships, and issue bonds as provided in the preceding section; and for the purpose of paying the said subscriptions or bonds, or the interest thereon, shall levy a tax, not exceeding the rate of one per cent per annum, upon the taxable property of their respective townships, and shall, through their treasurer, certify the said assessment to the clerk of the county court of their respective counties, and it shall be the duty of the said clerk of the county court to carry out the tax so assessed upon the collector's book; and the amount so raised by taxation shall remain in the hands of the treasurer of the proper county, and shall be employed by him in paying, first, the interest due on the said bonds, and then the principal, if any funds shall remain in his hands, and for no other purpose."

The county of Morgan, through which the road of this company passed, was not under township organization, and on the 1st of February, 1870, at an election called, the voters of congressional township No. 14 N., of range 9 W. of the third principal meridian, within that county, voted to subscribe to the stock of the company in accordance with the provisions of sect. 3 of the amended charter. Upon the authority of this vote the trustees of schools of the township made the subscription and issued thirty-two bonds of $1,000 each, bearing date Oct. 1, 1870, to make the required payment. These bonds were afterwards registered with the auditor of public accounts, and, upon his certificate to the clerk of the County Court of Morgan County, taxes were levied on the taxable property in the township to meet the interest as it fell due. In this way the interest for the years 1871, 1872, 1873, and 1874 was paid; but in 1875 the taxpayers of the township commenced this suit in a State court to enjoin any further taxation to meet the bonds, on the ground that there was no authority in law either for the subscription or the issue of the bonds. That suit was transferred by the bondholders from the State Court to the Circuit Court of the United States for the Southern District of Illinois, where, on final hearing, the prayer of the taxpayers, complainants, was granted. To reverse that decree this appeal was taken.

It is clear that art. 9, sect. 5, of the Constitution is a limitation on the power of the legislature to authorize taxation by public corporations or the political subdivisions of the State. The Supreme Court of the State has uniformly so decided. *Johnson* v. *Campbell*, 49 Ill. 316; *Harward* v. *St. Clair Drainage Co.*, 51 id. 130; *Madison County* v. *People*, 58 id. 456. The same court also decided, in *Trustees, &c.* v. *People* (63 id. 299), *People* v. *Dupuyt* (71 id. 651), and *People* v. *Trustees of Schools* (78 id. 136), that statutes substantially like the one now under consideration were unconstitutional, and consequently void, because the tax required was not for a corporate purpose. It is conceded that if these decisions are to be followed the judgment below was right.

The first of these cases was decided at the January Term, 1872, and the court then took occasion to say it was the first

instance in which the right of the trustees of schools to embark in railroad enterprises had been brought to their attention. The law then under consideration, like the one here, was not passed until 1869; and we infer from this and other circumstances that such legislation had not been common in the State before that time. The decisions since on the same question have all been one way; and this of itself would make it highly improper for us to depart from them, unless they were clearly wrong. As a rule, we treat the construction which the highest court of a State has given a statute of the State as part of the statute itself. It is only when, by giving such construction a retroactive effect, it will invalidate contracts which in our opinion were lawfully made, that we disregard them. Here, however, we find nothing of the kind. Taxation by municipal or public corporations must be for a corporate purpose. It is not always easy to decide whether a certain kind of tax is within or without this limitation; but we think it may be safely said that, as a general rule, a corporate purpose must be some purpose which is germane to the general scope of the object for which the corporation was created. Such we understand to be the effect of the Illinois decisions which are collected and commented on in *Hackett* v. *Ottawa*, 99 U. S. 86. A congressional township is one of the principal subdivisions which Congress has provided for in the survey of the public lands of the United States for the purposes of entry and sale. It is not necessarily a political subdivision of a State or of a county. When Illinois was admitted into the Union, section numbered sixteen in every surveyed township, or its equivalent, if the section had before that time been sold or otherwise disposed of, was granted the State "for the use of the inhabitants of such township, for the use of schools." 3 Stat. 430, c. 67, sect. 6. It was eminently proper, therefore, that the State should make these donations the points around which the public-school system should be organized. Hence the congressional or original surveyed townships were made public corporations for that purpose, and apparently for that alone. Taxation for school purposes only would be germane to such corporations, and no one would or could reasonably suppose that they were created for managing

the general affairs of a political subdivision of the State. As was very properly said in *People* v. *Trustees of Schools*, *supra*, "their creation is purely to aid in the great scheme of accomplishing universal education." They are pre-eminently public-school corporations, and in the absence of legislative power under the Constitution can no more tax the people to build railroads than an ordinary school district or an incorporated academy can use its funds in that way. A railroad may help the people in a school district, but it can hardly be said that the construction of a railroad is a school purpose. The existence of railroads may and undoubtedly will make schools more necessary, and school property more valuable; but the construction of railroads is not necessary either to the establishment or maintenance of schools. Railroads are the effect rather than the cause of schools.

Congressional townships under the name of the "trustees of schools" were incorporated for "school purposes" only. So the act of incorporation in terms declares. Taxation, by the corporate authorities, therefore on persons and property within the jurisdiction of such a township, to build railroads, is not taxation for a corporate purpose, and the decree below, which followed the decisions of the State court, was consequently right.

Decree affirmed.

OSCANYAN v. ARMS COMPANY.

129-668
135-521
40f-7115
139-39

1. Where it is shown by the opening statement of counsel for the plaintiff that the contract on which the suit is brought is void, as being either in violation of law or against public policy, the court may direct the jury to find a verdict for the defendant.
2. A court is, in the due administration of justice, bound to refuse its aid to enforce such a contract, although its invalidity be not specially pleaded.
3. A consul-general of a foreign government, residing in this country, entered into a contract, whereby, in consideration of a stipulated percentage, he agreed to use his influence in favor of a manufacturing company here with an agent of that government sent to examine and report in regard to the purchase of arms for it. By exerting his influence, sales of arms were made by the company to that government, and he brought suit to recover the percentage. *Held*, that, in a court of the United States, there can be no recovery on the contract.

108	[illegible]
L-ed	589
144	71
144	74

ERROR to the Circuit Court of the United States for the Southern District of New York.

The facts are stated in the opinion of the court.

Mr. Theodore W. Dwight and *Mr. Richard O'Gorman* for the plaintiff in error.

Mr. Edmund Randolph Robinson, contra.

MR. JUSTICE FIELD delivered the opinion of the court.

This is an action to recover the sum of $136,000, alleged to be due to the plaintiff upon a contract with the defendant, as commissions on the sales of fire-arms to the Turkish government, effected through his influence. The defendant pleads the general issue. At the time the transactions occurred, out of which this action has arisen, the plaintiff was consul-general of the Ottoman government at the port of New York. The defendant is a corporation, created under the laws of Connecticut. The action was originally commenced in the Supreme Court of New York, and on motion of the defendant, was removed to the Circuit Court of the United States. When it was called for trial, and the jury was impanelled, one of the plaintiff's counsel, as preliminary to the introduction of testimony, stated to the court and jury the issues in the case, and the facts which they proposed to prove. From such statement it appeared that the sales for which commissions were claimed by the plaintiff were made whilst he was an officer of the Turkish government, and through the influence which he exerted upon its agent sent to this country to examine and report in regard to the purchase of arms. The particulars of the services rendered will be more fully mentioned hereafter. It is sufficient now to say that the defendant, considering that the facts which the plaintiff proposed to prove showed that the contract was void as being corrupt in itself and prohibited by morality and public policy, upon which no recovery could be had, moved the court to direct the jury to render a verdict in its favor. The court thereupon inquired of the plaintiff's counsel if they claimed or admitted that the statements which had been made were true, to which they replied in the affirmative. Argument was then had upon the motion, after which the court directed the jury to find a verdict for the defendant, which was accord-

ingly done. Judgment being entered upon it, the case was brought to this court for review. The reversal of the judgment is sought for alleged errors of the court below in three particulars: —

1st, In directing a verdict for the defendant upon the opening statement of the plaintiff's counsel;

2d, In holding that the question of the illegality of the contract could be considered in the case, the same not having been specially pleaded; and,

3d, In adjudging that the contract set forth in the opening statement was illegal and void.

Each of these grounds will be carefully examined.

1. Several reasons are presented against the power of the court to direct a verdict upon the statement of the facts which the plaintiff proposed to prove, that might be more properly urged against its exercise in particular cases. The power of the court to act in the disposition of a trial upon facts conceded by counsel is as plain as its power to act upon the evidence produced. The question in either case must be whether the facts upon which it is called to instruct the jury be clearly established. If a doubt exists as to the statement of counsel, the court will withhold its directions, as where the evidence is conflicting, and leave the matter to the determination of the jury.

In the trial of a cause the admissions of counsel, as to matters to be proved, are constantly received and acted upon. They may dispense with proof of facts for which witnesses would otherwise be called. They may limit the demand made or the set-off claimed. Indeed, any fact, bearing upon the issues involved, admitted by counsel, may be the ground of the court's procedure equally as if established by the clearest proof. And if in the progress of a trial, either by such admission or proof, a fact is developed which must necessarily put an end to the action, the court may, upon its own motion, or that of counsel, act upon it and close the case. If, on a trial for a homicide, to take an illustration suggested by counsel, it should appear from the opening statement that the accused had been pardoned for the offence charged, it would be a waste of time to listen to the evidence of his original criminality; for if estab-

lished he would still be entitled to his discharge by force of the pardon. So in a civil action, if it should appear from the opening statement that it is brought to obtain compensation for acts which the law denounces as corrupt and immoral, or declares to be criminal, such as attempts to bribe a public officer, or to evade the revenue laws, or to embezzle the public funds, the court would not hesitate to close the case without delay. Of course, in all such proceedings nothing should be taken, without full consideration, against the party making the statement or admission. He should be allowed to explain and qualify it, so far as the truth will permit; but if, with such explanation and qualification, it should clearly appear that there could be no recovery, the court should not hesitate to so declare and give such direction as will dispose of the action.

Here there were no unguarded expressions used, nor any ambiguous statements made. The opening counsel was fully apprised of all the facts out of which his client's claim originated, and seldom was a case opened with greater fulness of detail. He dwelt upon and reiterated the statement of the fact which constituted the ground of the court's action in directing a verdict for the defendant, namely, that it was Oscanyan's influence alone which controlled the agent of the Turkish government; and for the use of that influence the defendant had agreed to give the compensation demanded, — that is to say, that whilst an officer of the Turkish government the plaintiff had stipulated for a commission on contracts obtained from it through his personal influence over its agent. Had the case been pending in a court of some of the States, or in an English court, a nonsuit would have been ordered, if the facts stated had been deemed fatal to the action. Involuntary nonsuits not being allowed in the Federal courts, the course adopted was the proper proceeding. The difference in the two modes is rather a matter of form than of substance, except in the case of a nonsuit a new action may be brought, whereas in the case of a verdict the action is ended, unless a new trial be granted either upon motion or upon appeal.

The language of this court in numerous cases is in accordance with these views, though used with reference to directing a verdict after evidence is received. But, as already stated,

it cannot make any difference as to the power of the court, whether the facts be developed by the evidence or be admitted by counsel. In *Merchants' Bank* v. *State Bank* it appeared, that, upon the evidence on behalf of the plaintiff being closed the defendant's counsel moved the court below to instruct the jury that it was not sufficient to enable them to find a verdict for the plaintiff. The instruction was given, and the jury found for the defendant. The case being brought here on writ of error, this court said, speaking through Mr. Justice Swayne: "According to the settled practice in the courts of the United States, it was proper to give the instruction, if it were clear the plaintiff could not recover. It would have been idle to proceed further when such must be the inevitable result. The practice is a wise one; it saves time and costs; it gives the certainty of applied science to the results of judicial investigation; it draws clearly the line which separates the provinces of the judge and jury, and fixes where it belongs the responsibility which should be assumed by the court." 10 Wall. 604, 637.

In *Pleasants* v. *Fant*, this court, speaking of a case where the evidence was insufficient to justify a verdict, and where it would be the duty of the court below to set it aside and grant a new trial, said, speaking through Mr. Justice Miller: "Must the court go through the idle ceremony in such a case of submitting to the jury the testimony on which plaintiff relies, when it is clear to the judicial mind that if the jury should find a verdict in favor of plaintiff, that verdict would be set aside and a new trial had? Such a proposition is absurd, and accordingly we hold the true principle to be that if the court is satisfied that, conceding all the inferences which the jury could justifiably draw from the testimony, the evidence is insufficient to warrant a verdict for the plaintiff, the court should say so to the jury." 22 Wall. 116, 122.

In *Railroad Company* v. *Fraloff* it was claimed by the company that the court below erred in not giving a peremptory instruction for a verdict in its favor. But this court, whilst holding the position untenable, said, speaking through Mr. Justice Harlan: "Had there been no serious controversy about the facts, and had the law, upon the undisputed evidence, precluded any recovery whatever against the com-

pany, such an instruction would have been proper." 100 U. S. 24, 26.

Indeed, there can be, at this day, no serious doubt that the court may at any time direct a verdict when the facts are undisputed, and that the jury should follow such direction. The maxim that questions of fact are to be submitted to the jury, and not to be determined by the court, is not violated by this proceeding any more than by a nonsuit in a State court where the plaintiff fails to make out his case. The intervention of the jury is required only where some question of fact is controverted.

Our conclusion, therefore, is that the first position of the plaintiff is not well taken.

The suggestion in the argument, that the counsel who made the opening had been called into the case only two days before the trial, and was not, therefore, fully prepared to open it, does not merit consideration. In the first place, the record does not show that any application was made to the court for a postponement of the trial on that ground; in the second place, two days ought to have been ample time for the counsel to acquaint himself with the essential facts of the case; and in the third place, no new fact is even now mentioned that would have materially changed his statement.

2. The position of the plaintiff that the illegality of the contract in suit cannot be noticed, because not affirmatively pleaded, does not strike us as having much weight. We should hardly deem it worthy of serious consideration had it not been earnestly pressed upon our attention by learned counsel. The theory upon which the action proceeds is that the plaintiff has a contract, valid in law, for certain services. Whatever shows the invalidity of the contract, shows that in fact no such contract as alleged ever existed. The general denial under the Code of Procedure of New York, or the general issue at common law, is, therefore, sustained by proof of the invalidity of the transaction which is designated in the complaint or declaration as a contract.

Whilst, however, at the common law, under the general issue in assumpsit, it was always admissible to give in evidence any matter which showed that the plaintiff never had a valid cause

of action, in practice many other matters were allowed under that plea, such as went to the discharge of the original cause of action, and showed that none subsisted at the commencement of the suit, — such as payment, release, accord and satisfaction, and a former recovery, and excuses for non-performance of the contract; and also that it had become impossible or illegal to perform it. 1 Chitty, Pleading, 493; *Craig* v. *The State of Missouri*, 4 Pet. 410–426; *Edson* v. *Weston*, 7 Cow. (N. Y.) 278; *Young* v. *Rummell*, 2 Hill (N. Y.), 478. It followed that there were many surprises at the trial by defences which the plaintiff was not prepared to meet. The English courts, under the authority of an act of Parliament passed in the reign of William IV., adopted rules which, to some extent, corrected the evils arising from this practice of allowing defences under the general issue which did not go directly to the validity of the original cause of action. And the Code of Procedure of New York did away entirely with the practice in that State, and required parties relying upon anything which, admitting the original existence of the cause of action, went to show its discharge, — such as a release or payment, or other matter, — to plead it specially, in order that the plaintiff might be apprised of the grounds of defence to the action. We do not understand that the code makes any other change in the matters admissible under the general denial.

But if we are mistaken in this view of the system of procedure adopted in New York, and of the defences admissible according to it under a general denial in an action upon a contract, our conclusion would not be changed in the present case. Here the action is upon a contract which, according to the view of the judge who tried the case, was a corrupt one, forbidden by morality and public policy. We shall hereafter examine into the correctness of this view. Assuming for the present that it was a sound one, the objection to a recovery could not be obviated or waived by any system of pleading, or even by the express stipulation of the parties. It was one which the court itself was bound to raise in the interest of the due administration of justice. The court will not listen to claims founded upon services rendered in violation of common decency, public morality, or the law. History furnishes instances of robbery,

arson, and other crimes committed for hire. If, after receiving a pardon, or suffering the punishment imposed upon him, the culprit should sue the instigator of the crime for the promised reward, — if we may suppose that audacity could go so far, — the court would not hesitate a moment in dismissing his case and sending him from its presence, whatever might be the character of the defence. It would not be restrained by defects of pleading, nor, indeed, could it be by the defendant's waiver, if we may suppose that in such a matter it would be offered. What is so obvious in a case of such aggravated criminality as the one supposed, is equally true in all cases where the services for which compensation is claimed are forbidden by law, or condemned by public decency or morality.

This doctrine was applied in *Coppell* v. *Hall*, reported in 7th Wallace. In that case Coppell was the acting British consul in New Orleans, and during the late civil war entered into a contract with one Hall, by which the latter agreed to furnish him with sundry bales of cotton, which he was to cause to be protected from seizure by our forces and transported to New Orleans, and there disposed of to the best advantage, he to receive one-third of the profits for his compensation. For breach of this contract he sued Hall, who set up that the contract was against public policy and void, and also a reconventional demand or counterclaim for damages for a breach of the contract by Coppell. On the trial, the court below, among other things, instructed the jury that if the contract was illegal, the illegality had been waived by the reconventional demand of the defendant; but this court said, speaking through Mr. Justice Swayne, that the instruction "was founded upon a misconception of the law. In such cases," he added, "there can be no waiver. The defence is allowed, not for the sake of the defendant, but of the law itself. The principle is indispensable to the purity of its administration. It will not enforce what it has forbidden and denounced. The maxim, *ex dolo malo non oritur actio*, is limited by no such qualification. The proposition to the contrary strikes us as hardly worthy of serious refutation. Whenever the illegality appears, whether the evidence comes from one side or the other, the disclosure is fatal to the case. No consent of the defendant can neutralize

its effect. A stipulation in the most solemn form to waive the objection would be tainted with the vice of the original contract, and void for the same reasons. Wherever the contamination reaches it destroys. The principle to be extracted from all the cases is, that the law will not lend its support to a claim founded upon its violation." See also *Holman* v. *Johnson*, 1 Cowp. 341.

Approving of the doctrine so well expressed in this citation, our conclusion is, that the second position of the plaintiff is not well taken.

3. We are brought, then, to the consideration of the contract upon which the action is founded. This is given in the opening statement of the plaintiff, with full particulars of the services rendered. We need only repeat its essential portions. As already mentioned, he was, at the time, consul-general of the Ottoman government at the port of New York. For many years previously to 1869 he had resided in the United States, and was familiar with our language. In that year the Turkish government sent Rustem Bey, an officer of high rank in its service, to the United States to examine and report in regard to the purchase of arms and machinery for its use. He was a friend of the plaintiff; had known him many years, and their relations were intimate. On his arrival in this country he made the plaintiff's office his headquarters, and there all his interviews and negotiations with the manufacturers of arms were had, and, as he did not speak English, these interviews and negotiations were conducted through the plaintiff. The manufacturers soon became aware of the relation of the men to each other, and accordingly opened a correspondence with the plaintiff, or waited upon him, to secure his influence with the Bey in presenting their arms. Among others, Winchester, the president of the Winchester Repeating Arms Company, of Connecticut, the defendant here, sought an introduction to him, and the scene is thus narrated: "Said Mr. Winchester to Oscanyan, 'Will you be kind enough to call the attention of Rustem Bey to my repeating rifle?' 'Well,' said Oscanyan, 'Mr. Winchester, I am receiving commissions from all parties for that favor, and I expect commissions for my services, and that is one of the ways by which I make my livelihood; if

you can compensate me, if you can remunerate me by giving me commissions, I will use my influence for you and do all I can for you.' 'Very well,' said Mr. Winchester, 'that is all right. You shall have whatever commissions we deem proper, and we will talk the matter over and agree upon that.' Accordingly Oscanyan showed the Winchester repeating rifle to Rustem Bey," who was not pleased with it, but through Oscanyan's influence was induced to send samples of it to Constantinople.

In January, 1870, the Bey received instructions from the Turkish minister of ordnance to examine and report upon the Spencer gun. These instructions were given because the Turkish government had heard that the United States had a large number of these guns on hand which they desired to dispose of. They immediately became known to Oscanyan, and as he had agreed with Winchester to press the claims of the Winchester gun, he at once proceeded to use his influence with the Bey to condemn the Spencer gun. The opening statement says that "he raised all manner of objections that he could, and he finally did succeed in inducing" the Bey to put it aside. Then he brought out a Winchester gun, a sample of which he always kept in his office for the very purpose, whenever opportunity offered, of presenting its claims. It appears, however, that the Bey did not, from the first, like that gun, and for that reason, continues the opening statement, "Oscanyan had to use all his ingenuity and skill and perseverance and patience" to get him to look at it at all; but finally he succeeded in getting him to recommend the purchase of a thousand of them for the use of the imperial body-guard. This, said the plaintiff's counsel, was done by the Bey "in order to please Oscanyan," knowing the fact that he had an arrangement with the defendant for a commission on the sale. Accordingly the Bey reported to the Turkish government, condemning the Spencer gun and recommending the purchase of the Winchester repeating arms. Soon afterwards Oscanyan informed Winchester of what he had done, when the latter remarked that he would have allowed Oscanyan the same commissions on the Spencer guns as on the others. Oscanyan replied that the United States had a large number of them on hand, and if the Bey had reported favorably on that

gun, the Turkish government would have ordered them directly from the United States government. It was that reason, said Oscanyan, which "weighed on my mind" to persuade the Bey to condemn the gun.

In February, 1870, the Bey received fresh instructions to inquire into and report upon the price of twenty thousand repeating arms, and to send fresh samples. Oscanyan soon learned of this and immediately telegraphed for Winchester, who arrived at his office on the following day, when Oscanyan informed him that he had got an order for twenty thousand guns, or an inquiry for the price of twenty thousand, and thought he could get an order for one hundred thousand. He then called Winchester's attention to an objection raised by the Bey relating to the spring of the magazine of the rifle, and advised him to meet it; and this advice was acted upon. Soon afterwards Winchester, as president of the company, put in writing his agreement with Oscanyan, to give ten per cent upon all sales of arms of the company made to or by the latter to the Ottoman government, provided that such sales were made at prices and upon terms having his approval. This was dated on the 4th of March, 1870. On the following day a box of fresh samples was forwarded to the Turkish minister of ordnance at Constantinople, and, after a delay of some months for the receipt of the cartridges, a trial of them was had with a favorable result. Written contracts between the defendant and the Turkish government followed; one made Nov. 9, 1870, for arms to the amount of $520,000, and another made Aug. 19, 1871, for arms to the amount of $840,000.

The plaintiff claims that these contracts were procured through the recommendations which by his influence were made by Rustem Bey. His counsel stated this in his opening, and declared that no other person had possessed any influence in effecting the sales. It is for the use of this influence that the contract in suit was made and compensation is now demanded. The question then arises, Is this contract one which the court will enforce? We have no hesitation in answering it in the negative. The contract was a corrupt one, — corrupt in its origin and corrupting in its tendencies. The services stipulated and rendered were prohibited by considerations of

morality and policy which should prevail at all times and in all countries, and without which fidelity to public trusts would be a matter of bargain and sale, and not of duty.

In the first place, the plaintiff was, at the time, an officer of the Turkish government. As its consul-general at the port of New York, he was invested with important functions and entitled to many privileges by the law of nations. It is not necessary here to state with any particularity the functions and privileges attached to the consular office. These will be found in any of the approved treatises on international law.

It is enough to observe that a consul is an officer commissioned by his government for the protection of its interests and those of its citizens or subjects; and whilst he is sometimes allowed, in Christian countries, to engage in commercial pursuits, he is so far its public agent and commercial representative that he is precluded from undertaking any affairs or assuming any position in conflict with its interests or its policy. By some governments he is invested — in the absence of a minister or ambassador to represent them — with diplomatic powers, and, as between their citizens or subjects, may also exercise judicial functions. By all governments his representative character is recognized, and for that reason certain exemptions and privileges are granted to him. In the Constitution of the United States, consuls are classed with ministers and ambassadors in the enumeration of parties whose cases are subject to the original jurisdiction of the Supreme Court, and in the treaty with the Ottoman Empire authority is given to it to appoint consuls in the United States.

It was stated in the argument that the office held by the plaintiff was an honorary one, created especially as an evidence of the high regard entertained for him by the government of his country, as if the objection to his claim of a right to exact a commission on contracts with it, made through his influence, was obviated by the fact that he received no salary for the discharge of his official duties. Assuming the office to have been purely an honorary one, we do not perceive how this circumstance could in any respect alter his relations to that government. If conferred as a mark of honor, the fact would seem to impose upon him increased obligation to avoid any departure

from the line of duty. The members of Parliament in England receive no pay for their services, and the expenses of many official positions, in this and other countries, exceed the compensation allowed to the incumbents; but this circumstance would not excuse much less justify them in sacrificing the public interests for individual gains or profits. All such positions are trusts to be exercised from considerations of duty and for the public good. Whenever other considerations are allowed to intervene and control their exercise, the trust is perverted and the community suffers. The plaintiff, it is true, was not the purchasing agent of the Turkish government, but he was its honored officer, upon whose fidelity to its interests it had a right to rely in any advice which he might give to its agent. But so far from justifying this confidence, the only motive upon which he appears to have acted was the hope of gain to himself by high commissions on the sales effected. As justly remarked by the judge who tried the case, the benefits which would inure to the government of which he was the commercial representative, do not seem to have entered into the considerations which influenced his mind.

But, independently of the official relation of the plaintiff to his government, the personal influence which he stipulated to exert upon another officer of that government was not the subject of bargain and sale. Personal influence to be exercised over an officer of government in the procurement of contracts, as justly observed by counsel, is not a vendible article in our system of laws and morals, and the courts of the United States will not lend their aid to the vendor to collect the price of the article. Numerous adjudications to this effect are found in the State and Federal courts. This is true when the vendor holds no official relations with the government, though the turpitude of the transaction becomes more glaring when he is also its officer.

In *Tool Company* v. *Norris*, reported in the 2d of Wallace, this court held that an agreement for compensation to procure a contract with the government to furnish it with supplies was against public policy and could not be enforced. That was a case where the compensation was made contingent upon success in procuring the contract, and, as we shall hereafter show,

should be distinguished from agreements for services in presenting information on the subject for the consideration of the government. It was a case where nothing was to be paid if no contract was obtained, and if obtained the compensation was to be proportionate to its extent. In deciding the case the court said: "Considerations as to the most efficient and economical mode of meeting the public wants should alone control in this respect the action of every department of government. No other consideration can lawfully enter into the transaction, so far as the government is concerned. Such is the rule of public policy, and whatever tends to introduce any other elements into the transaction is against public policy. That agreements like the one under consideration have this tendency is manifest. They tend to introduce personal solicitation and personal influence as elements in the procurement of contracts, and thus directly lead to inefficiency in the public service and to unnecessary expenditures of the public funds. . . . All agreements for pecuniary considerations to control the business operations of the government or the regular administration of justice, or the appointments to public offices, or the ordinary course of legislation, are void as against public policy, without reference to the question whether improper means are contemplated or used in their execution. The law looks to the general tendency of such agreements, and it closes the door to temptation by refusing them recognition in any of the courts of the country."

In this case the doctrine of the court in *Marshall* v. *Baltimore & Ohio Railroad Co.*, reported in 16th Howard, was emphasized. There compensation was claimed by the plaintiff for services rendered in procuring the passage of a law by the legislature of Virginia, upon a contract that if the law was not passed, or, if passed, was not accepted and adopted or used by the stockholders, no compensation should be allowed. It was held that the contract was void as against public policy. The court, speaking through Mr. Justice Grier, said: "Bribes in the shape of high contingent compensation must necessarily lead to the use of improper means and the exercise of undue influence. Their necessary consequence is the demoralization of the agent who covenants for them; he is soon brought to

believe that any means which will produce so beneficial a result to himself are 'proper means;' and that a share of these profits may have the same effect of quickening the perceptions and warming the zeal of influential or 'careless' members in favor of his bill." See also *Wood* v. *McCann*, 6 Dana (Ky.), 366; *Mills* v. *Mills*, 40 N. Y. 543.

In *Trist* v. *Child*, reported in 21st of Wallace, the distinction is drawn between the use of personal influence to secure legislation, and legitimate professional services in making the legislature acquainted with the merits of the measures desired. Whilst the former is condemned, the latter are, within certain limits, regarded as appropriate subjects for compensation. There the defendant had employed the plaintiff to get a bill passed by Congress for an appropriation to pay a claim against the United States. It was considered by the court to have been a contract for lobby services, and adjudged void as against public policy. Other similar cases were mentioned by the court, and, after observing that in all of them the contract was held to be against public policy and void, it added, speaking through Mr. Justice Swayne: "We entertain no doubt that in such cases, as under all other circumstances, an agreement, express or implied, for purely professional services is valid. Within this category are included drafting the petition to set forth the claim, attending to the taking of testimony, collecting facts, preparing arguments, and submitting them, orally or in writing, to a committee or other proper authority, and other services of like character. All these things are intended to reach only the reason of those sought to be influenced. They rest on the same principle of ethics as professional services rendered in a court of justice, and are no more exceptionable. But such services are separated by a broad line of demarcation from personal solicitation, and the other means and appliances which the correspondence shows were resorted to in this case."

So, too, with reference to furnishing the government with arms or supplies of any kind. It is legitimate to lay before the officers authorized to contract, all such information as may apprise them of the character and value of the articles offered, and enable them to act for the best interests of the country. And for such services compensation may be had as for similar

services with private parties, either upon a *quantum meruit*, or, where a sale is effected, by the ordinary brokerage commission. And here it may be observed, in answer to some authorities cited, that the percentage allowed by established custom of commission merchants and brokers, though dependent upon sales made, is not regarded as contingent compensation in the obnoxious sense of that term, which has been so often the subject of animadversion by this court, as suggesting the use of sinister or corrupt means for accomplishing a desired end. They are the rates established by merchants for legitimate services in the regular course of business. But where, instead of placing before the officers of the government the information which should properly guide their judgments, personal influence is the means used to secure the sales, and is allowed to prevail, the public good is lost sight of, unnecessary expenditures are incurred, and, generally, defective supplies are obtained, producing inefficiency in the public service.

In *Meguire* v. *Corwine*, decided at the last term, the doctrine of the above cases was approved. There an agreement to pay the plaintiff — in consideration of his appointment as government counsel — one-half the fees he might recover, was adjudged invalid. Transactions of the kind were declared to be "an unmixed evil;" and the court said that whether forbidden by statute or condemned by public policy, "no legal right can spring from such a source." 101 U. S. 108, 111.

In the present case there is no feature that relieves the contract which the plaintiff seeks to enforce from the condemnation pronounced in the several cases cited. It is the naked case of one officer of a government, to secure its purchase of arms, selling his influence with another officer in consideration of a commission on the amount of the purchase. The courts of the United States will not lend their aid to collect compensation for services of this nature; nor does it make any difference that the Turkish government did not object to the plaintiff's taking commission on such contracts, which counsel contended we must consider as admitted together with the rest of the opening statement. We may doubt whether we are compelled to take as correct, with the facts mentioned touching the contract in court, his statement of the law or customs of other

countries. But admitting this to be otherwise, and that the Turkish government was willing that its officers should be allowed to take commissions on contracts obtained for it by their influence, that is no reason why the courts of the United States should enforce them. Contracts permissible by other countries are not enforceable in our courts, if they contravene our laws, our morality, or our policy. The contract in suit was made in this country, and its validity must be determined by our laws. But had it been made in Turkey, and were it valid there, it would meet with the same reprobation when brought before our courts for enforcement.

The general rule undoubtedly is that the validity of a contract is to be decided by the law of the place where it is made, unless it is to be performed in another country; but to this, as to all general rules, there are exceptions, and among these Story mentions contracts made in a foreign country to promote or reward the commission of crime, to corrupt or evade the due administration of justice, to cheat public agents, or to affect the public rights, and other contracts which in their nature are founded in moral turpitude, and are inconsistent with the good order and solid interest of society. "All such contracts," he adds, "even although they might be held valid in a country where they are made, would be held void elsewhere, or at least ought to be, if the dictates of Christian morality, or even of natural justice, are allowed to have their due force and influence in the administration of international jurisprudence." Story, Conflict of Laws, sect. 258.

Among such obnoxious contracts must be included all such as have for their object the control of public agents by considerations conflicting with their duty and fidelity to their principals. A contract to bribe or corruptly influence officers of a foreign government will not be enforced in the courts of this country, — not from any consideration of the interests of that government or any regard for its policy, but from the inherent viciousness of the transaction, its repugnance to our morality, and the pernicious effect which its enforcement by our courts would have upon our people. *Hope* v. *Hope*, 8 De G., M. & G. 731; *Watson* v. *Murray*, 23 N. J. Eq. 257.

In any view of the contract here, whether it would be valid

or invalid according to Turkish law and customs, it is intrinsically so vicious in its character and tendency, and so repugnant to all our notions of right and morality, that it can have no countenance in the courts of the United States.

Our conclusion, therefore, is that the third position of the plaintiff is not well taken.

It follows that the judgment of the court below must be affirmed; and it is

So ordered.

BONDURANT, TUTRIX, *v.* WATSON.

The only paper purporting to be the writ of error in this case is in the name, and bears the teste, of the Chief Justice of the Supreme Court of Louisiana, and is signed by the clerk and sealed with the seal of that court. *Held*, that the suit must be dismissed for want of jurisdiction.

ERROR to the Supreme Court of the State of Louisiana.

The writ of error in this case is as follows: —

"UNITED STATES OF AMERICA,

"*State of Louisiana, ss:*

"The Hon. Chief Justice of the Supreme Court of the State of Louis'a, to the Clerk of the Supreme Court of the State of Louisiana, greeting:

"Because in the record and proceedings, as also in the rendition of the judgment of a plea, which is in our said Supreme Court, before us, between Frank Watson, plaintiff, and Mrs. Ella F. Bondurant, tutrix, &c., defendant, No. 6564 on the docket of this court, it is claimed by the said defendant that, being a citizen of the State of Mississippi, and the said Watson being a citizen of Louisiana, and in the said cause the rights, titles, and privileges of said defendant, Mrs. Bondurant, tutrix, &c., under the statutes and under the Constitution of the United States, are by her claimed, and that the decision and judgment of this honorable Supreme Court of Louisiana is against the said titles, rights, and privileges of said defendant, Mrs. Bondurant, specially set up under the laws and the Constitution of the United States, and because the said Mrs. Bondurant has filed her petition herein for a writ of error to the

hon. Supreme Court of the United States at Washington, D. C., claiming that a manifest error hath happened, to the great damage of the said defendant, Mrs. E. F. Bondurant, executrix, tutrix, &c., as by said defendant's complaint appears: We being willing that error, if any hath been, should be duly corrected, and full and speedy justice done to the parties aforesaid in this behalf, do command you, if judgment be therein given, that then under your seal, distinctly and openly, you send the record and proceedings aforesaid, with all things concerning the same, to the Supreme Court of the United States, together with this writ, so that you have the same at Washington, on the second Monday of October next, in the said Supreme Court, to be then and there held, that the record and proceedings aforesaid being inspected, the said Supreme Court may cause further to be done therein to correct that error what of right, and according to the laws and customs of the United States, should be done.

"Witness the Honorable T. C. Manning, Chief Justice of the said Supreme Court of Louisiana, this fifteenth day of December, in the year of our Lord one thousand eight hundred and seventy-seven.

[SEAL.] "ALF'D ROMAN,
"*Clerk of the Supreme Court of Louisiana.*"

Mr. Samuel R. Walker for the plaintiff in error.
Mr. Edwin T. Merrick and *Mr. George W. Race*, *contra.*

MR. CHIEF JUSTICE WAITE delivered the opinion of the court.

We have no jurisdiction in this case, as no writ of error has ever been issued. *Mussina* v. *Cavazos*, 6 Wall. 355. By the ninth section of the act of May 8, 1792, c. 36 (1 Stat. 278), it was made the duty of the clerk of this court to transmit to the clerks of the several courts the form of a writ of error approved by two of the justices of this court. This was done, and the form adopted required the writ to be issued in the name of the President of the United States, and have the teste of the Chief Justice of this court. Sect. 1004 of the Revised Statutes is as follows: —

"Writs of error returnable to the Supreme Court may be issued as well by the clerks of the circuit courts under the seals thereof, as by the clerk of the Supreme Court. When so issued they shall be,

as nearly as each case may admit, agreeable to the form of a writ of error transmitted to the clerks of the several circuit courts by the clerk of the Supreme Court, in pursuance of section nine of the act of May eight, seventeen hundred and ninety-two, chapter thirty-six."

The writ in this case was in the name of the Chief Justice of the Supreme Court of the State of Louisiana. It bore the teste of that Chief Justice, and was signed by the clerk, and sealed by the seal of that court. It had not a single requisite of a writ of this court. Had it been even colorably issued from this court, it might have been amended under sect. 1005 of the Revised Statutes, which is certainly very liberal, and as follows: —

"The Supreme Court may, at any time, in its discretion and upon such terms as it may deem just, allow an amendment of a writ of error, when there is a mistake in the teste of the writ, or a seal to the writ is wanting, or when the writ is made returnable on a day other than the day of the commencement of the term next ensuing the issue of the writ, or when the statement of the title of the action or parties thereto in the writ is defective, if the defect can be remedied by reference to the accompanying record, and in all other particulars of form: *Provided* the effect has not prejudiced, and the amendment will not injure, the defendant in error."

But here there is nothing which even purports to be a writ from this court, and there is, therefore, nothing to amend. If we should permit the parties to change the seal, or the title, or to do everything else which this section allows, there would still be no writ, for nothing has been done either in the name of the President or under the authority of the United States. The Supreme Court of the State has directed that its record be certified here for examination and review, but no writ to that effect either in form or substance has ever issued from this court. As such a writ is necessary to our jurisdiction, the suit is

Dismissed.

BONDURANT v. WATSON.

43 f. 695

103	281
L-ed	447
141	125
103	281
L-ed	447
149	530

1. This court enforces, as a rule of property applicable to Louisiana, the decision of the Supreme Court of that State, that a mortgage of lands has no effect as to third persons, unless it be inscribed in the proper public office, and that, save in the single case of a minor's mortgage upon the property of his tutor, every mortgage ceases to be effectual against third parties, unless it be reinscribed within ten years from the date of its original inscription, and that neither the pact *de non alienando* nor the pendency of a suit to foreclose dispenses with the necessity of so inscribing or reinscribing it.
2. A., a citizen of Louisiana, filed a bill in a court of that State, praying for an injunction to restrain B., who had recovered judgment against C. in that court, and sued out thereon a *fieri facias*, from levying the writ upon a tract of land whereof A. was the owner and actual possessor by a good and valid title from C. The judgment declares that an authentic act of mortgage, executed by C. and covering that and other tracts, was rendered executory, and that all the lands should be seized to satisfy it. The act was not reinscribed. A. was not a party to the judgment, nor was any demand made of, or notice given to, him. B. was a citizen of Mississippi, and filed a petition for the removal of the suit. *Held*, that the amount in controversy being sufficient, the suit was removable, under the act of March 3, 1875, c. 137, 18 Stat., pt. 1, p. 470.
3. The citizenship of the parties need not be averred in the petition for removal where it is shown by the record.

APPEAL from the Circuit Court of the United States for the District of Louisiana.

The facts are stated in the opinion of the court.

Mr. Samuel R. Walker for the appellant.

Mr. Edwin T. Merrick and *Mr. George W. Race, contra.*

MR. JUSTICE WOODS delivered the opinion of the court.

Daniel Bondurant died seised of a large plantation in the parish of Tensas, in the State of Louisiana. His estate descended to his three sons, Albert, Horace, and John, and to Walter E. Bondurant, his infant grandson.

In 1852, upon petition of the sons for a partition of the plantation, a decree of sale was made, under which it was sold, and struck off to them for the price of $150,000. Of this sum, Walter, the grandson, was entitled to one-fourth, namely, $37,500.

The sheriff, on Dec. 4, 1858, executed a deed to the sons, reserving therein a special mortgage and privilege on the lands in favor of Walter E. Bondurant for his share of the purchase-money.

In the act of sale, which was executed both by the sheriff and the purchasers, the latter bound themselves not to alienate, deteriorate, or incumber the property to the prejudice of the mortgage, an agreement known in the local jurisprudence of Louisiana as the pact *de non alienando*. The mortgage was recorded Dec. 6, 1852. The law of Louisiana required it to be reinscribed within ten years from that date. It was not reinscribed until September, 1865. The three sons of Daniel Bondurant divided the plantation between them. The part which is in controversy in this suit was set off to John Bondurant, who, in 1854, conveyed it to one Augustus C. Watson, Sen.

On Jan. 30, 1866, Walter E. Bondurant began an action against his uncles, Albert, Horace, and John Bondurant, in the District Court for the Parish of Tensas, to recover judgment against them for his part of the purchase price of said plantation, and to enforce his mortgage and privilege thereon. The court rendered a judgment in his favor for the sum of $37,500, with interest, and ordered, adjudged, and decreed that the authentic act of mortgage, which was the basis of the action, should be, and the same was thereby, rendered executory and ordered to be executed, and that the land described therein should be seized and sold to satisfy said judgment.

Upon this judgment a *fieri facias* was issued, directed to the sheriff of the parish. By virtue thereof he advertised for sale the plantation described in the mortgage, and struck off and sold it to Walter E. Bondurant, and executed to him a deed therefor.

Walter E. Bondurant thereupon brought an action in the United States Circuit Court for the District of Louisiana against Augustus C. Watson, Sen., to recover possession of that part of the plantation which had been sold to him by John Bondurant.

He recovered judgment for the land against Watson. That judgment was taken, by writ of error, to the Supreme Court of

the United States, where it was reversed on the sole ground that there had been no actual seizure of the premises by the sheriff before the sale. See *Watson* v. *Bondurant*, 21 Wall. 123.

In the mean time Walter E. Bondurant died. The judgment in his favor in the District Court for the Parish of Tensas was revived in the name of his widow, Ella F. Bondurant, his testamentary executrix and the tutrix of his minor son.

At her instance another *fieri facias* was issued on the judgment of the District Court for the Parish of Tensas, and placed in the hands of the sheriff of that parish. By virtue of the writ he seized that part of the plantation which had been sold to Augustus C. Watson, Sen., and advertised the same for sale. Thereupon Frank Watson, the appellee, on June 25, 1875, filed his petition in the District Court for the Parish of Tensas against the sheriff and Ella F. Bondurant, executrix and tutrix. He averred that his "immediate author," Augustus C. Watson, Sen., acquired the land in question by a good and valid title translative of property from John Bondurant, on Nov. 30, 1854; that said Augustus C. Watson, Sen., held said lands by notorious public and uninterrupted possession, in good faith as owner, from Nov. 30, 1854, until Aug. 5, 1872, when he transferred his title and possession, by deed of that date, to the petitioner, Frank Watson, and his brother, A. C. Watson, Jr., and that by deed dated Feb. 6, 1875, A. C. Watson, Jr., conveyed all his estate in said land to the petitioner, Frank Watson.

He further averred that the sheriff of Tensas Parish, acting under a writ of *alias fi. fa.* issued on the said judgment recovered by Walter E. Bondurant against Albert, John, and Horace Bondurant in the District Court of said parish, had illegally seized the tract of land which was held and claimed by the petitioner under the deeds of conveyance already mentioned, and would advertise and sell the same, unless restrained by injunction.

The petition further alleged that said act of Dec. 4, 1854, which reserved the mortgage and privilege on said plantation in favor of Walter E. Bondurant for $37,500 had not been reinscribed within ten years from the date of its original registry in the mortgage records, and it had, therefore, ceased to have

any force or effect as a mortgage and privilege on said tract of land; that at the time of the institution of the suit of said Walter and others, in which the judgment was recovered by virtue of which said *fieri facias* was issued, said Augustus C. Watson, Sen., was and for many years previous had been in public possession of said property as owner, yet he was not made a party to said suit, which was *via ordinaria*, nor were any demands or notices given him as third possessor.

The petition, therefore, claimed that the seizure of the property by the sheriff was illegal, and prayed an injunction against Ella F. Bondurant, executrix and tutrix, and against the sheriff, restraining them from proceeding any further with the said writ of *fieri facias*, so far as it related to the lands claimed by the petitioner.

The injunction prayed for was granted by the court in which the petition was filed, after notice to the sheriff and Mrs. Bondurant.

Thereupon, on Oct. 18, 1875, Mrs. Bondurant filed her petition, verified by her oath, in which she prayed for a removal of the cause to the United States Circuit Court for the District of Louisiana. In her petition she averred that she was a citizen of the State of Mississippi, and was, in her capacity as tutrix and executrix, defendant in a civil suit pending in that court, in which the matter in dispute exceeded, exclusive of costs, the sum of $500, and in which Frank Watson, who was a citizen of Louisiana, was plaintiff.

This petition was accompanied by a bond in the penal sum of $250, conditioned according to law, and executed by the petitioner and two sureties.

The petition for removal was denied by the State court. Nevertheless Mrs. Bondurant, within the time required by law, filed in the United States Circuit Court a transcript of the proceedings of the State court, beginning with the issuing of the *fieri facias*, which the petition of Watson was filed to enjoin.

The Circuit Court took jurisdiction of the case and directed it to be placed on the equity side of the docket. Thereupon Mrs. Bondurant filed her answer and amended answer, to which the petitioner, Watson, filed his replication. Upon the issue thus made, voluminous proofs were taken, and upon final hear-

ing the Circuit Court made perpetual the injunction which had been granted by the State court. That decree is now here on appeal taken by the defendant, Mrs. Bondurant.

The District Court for the Parish of Tensas, claiming that the cause still remained in that court, notwithstanding the attempt of the defendant to remove it to the United States Circuit Court, proceeded with the cause to final hearing, and also made perpetual the injunction which it had granted. This decree was affirmed on appeal by the Supreme Court of Louisiana. See *Watson* v. *Bondurant*, 30 La. Ann. 1, pt. 1.

The defendant brought up that decree also by writ of error to this court.

By agreement of counsel, the records in both cases have been submitted and argued together. Watson, the complainant in both cases, claimed that the suit was not a removable one, and that there was no effectual removal thereof to the Circuit Court, and that the State courts alone had jurisdiction. The defendant denied the jurisdiction of the State court, and insisted that the case was a removable one, and had been removed to the Circuit Court, which thereafter alone had jurisdiction. The case brought here from the State Supreme Court having been dismissed for want of a writ of error (see *Bondurant, Tutrix*, v. *Watson*, *supra*, p. 278), it becomes necessary to decide the question of jurisdiction.

On this question the first contention of Watson, the complainant, is that the petition of Mrs. Bondurant for the removal of the case, which was filed Oct. 18, 1875, does not aver that at the commencement of the suit, which was June 25, 1875, she was a citizen of the State of Mississippi.

Whether, under the act of March 3, 1875, c. 137, to regulate the removal of causes from the State courts, such an averment is necessary, is a question which was expressly reserved by this court in the case of *Insurance Company* v. *Pechner* (95 U. S. 183), and which it has never decided. We do not find it necessary to decide it now, for the evidence in the record satisfies us that Mrs. Bondurant was a citizen of Mississippi on June 25, 1875, when the proceeding against her was begun by Watson. Whether the petition avers the fact or not is immaterial, provided the fact is shown to exist by any part of the record.

Gold-Washing and Water Company v. *Keyes*, 96 id. 199; *Briges* v. *Sperry*, 95 id. 401; *Robertson* v. *Cease*, 97 id. 646.

The record shows that her husband, of whose will she was the executrix, was at the time of his death, and for many years before had been, a citizen of the State of Mississippi, residing at Natchez. She was, therefore, a citizen of Mississippi at the time of her husband's death, which took place before the filing by Watson of the petition in this case, on June 25, 1875. In October, 1875, she swears that she was then a citizen of Mississippi. At and before that time she had been sojourning with her father in New Orleans, but, as the record indicates, her residence there was transient and temporary, and with a purpose, declared at the time, of retaining her citizenship in Mississippi. She could not lose her citizenship in Mississippi without a change of residence *animo manendi*, and her purpose was better known to herself than to any one else.

The fact that Mrs. Bondurant took out letters testamentary on the will of her husband in the parish of Tensas without giving bond, as she would have been required to do had she been a non-resident of the State, does not, in our judgment, overcome her affidavit that she was a citizen of Mississippi, and the presumption that, having once been a citizen of that State, her citizenship continued. The proceedings in the Probate Court of Tensas Parish were conducted entirely by her attorney, and their details were not necessarily known to her.

We think the fact of her citizenship in Mississippi, at the time of the commencement of Watson's suit against her, sufficiently appears by the record, and this supplies the want of an averment of the fact in her petition for the removal of the case.

The next claim of Watson is, that the suit removed was merely auxiliary and incidental to the original case of *Walter E. Bondurant* v. *Albert Bondurant and Others*, and was not, therefore, removable.

In this view we do not concur. The case which was removed had all the elements of a suit in equity. The petition filed in the State court sought equitable relief, which no court strictly a court of law could grant. Citations were issued and served upon the defendants. When the case was transferred to the Circuit Court, it was placed on the equity side of the docket.

An answer and a replication were filed, testimony was taken, and a decree made upon final hearing according to the equity practice. The controversy in the original cause between Walter E. Bondurant and Albert Bondurant and others had been ended by a final judgment. The case between Watson and Mrs. Bondurant had its origin in that judgment, but it was a new and independent suit between other parties and upon new issues. It was a suit in which the plaintiff sought to be protected against a judgment, to which he was not a party, by which his property had been specifically condemned to be sold to satisfy a claim against others, and not against him.

He insisted that the mortgage on which the judgment was founded was not a lien on the property claimed by him. To prevent being turned out of possession of his own land, and a cloud being cast on his title by a seizure and sale under the judgment of the State court was the purpose of his suit. It could not be called incidental or auxiliary to the original case. It was a new and independent controversy between other parties. It filled all the requisites of the law for the removal of causes. It was a suit of a civil nature in equity, in which the matter in dispute, exclusive of costs, exceeded the sum or value of $500, and in which there was a controversy between citizens of different States.

No reason is perceived why a party to such a controversy should not enjoy his constitutional right of having his case tried by a court of the United States.

The case of *Bank* v. *Turnbull & Co.* (16 Wall. 190), relied on by the appellee, is not in point. That was a statutory proceeding to try in a summary way the title to personal property seized on execution. It was nothing more than a method prescribed by the law to enable the court to direct and control its own process, and, as decided by this court, was merely auxiliary to, and a graft upon, the original action.

It is next claimed that the case was not removable because its purpose was to obtain the writ of injunction to stay proceedings in a State court, which a court of the United States is forbidden to grant by sect. 720 of the Revised Statutes.

It is to be observed that the injunction had already been

granted by the State court before the application for removal was made. The interest and purpose of Mrs. Bondurant, who asked for the removal, was to get the injunction dissolved. If Watson had filed his petition for injunction in the State court, and before it was allowed had petitioned for a removal of the cause to the Circuit Court, with the design of applying to that court for his injunction, the objection to the right of removal would have force. That would have been an evasion of the statute. But that is not this case.

The act of March 3, 1875, provides that all injunctions had in the suit before its removal, shall remain in full force and effect until dissolved or modified by the court to which the suit shall be removed. It provides for removals, without making any exception, of cases in which an injunction has already been allowed to stay proceedings in a State court. It would not be according to the well-settled rules of statutory construction to import an exception into this statute from a prior one on a different subject.

We are of opinion, therefore, that the case was one removable under the act of March 3, 1875, and that the Circuit Court obtained jurisdiction by the proceedings for its removal.

The merits of the case have been conclusively settled by the Supreme Court of Louisiana.

Watson, the plaintiff, claimed that the parcel of land conveyed to him by John Bondurant was freed from the lien of the mortgage to Walter Bondurant, by the failure of the latter to have it reinscribed within the ten years from the date of its original registry.

The contention of the defendant, Mrs. Bondurant, is that reinscription was not necessary to preserve the lien of the mortgage on Watson's land, because he was charged with notice by the pact *de non alienando* contained in the mortgage, and because the mortgagee, Walter E. Bondurant, being a minor, the mortgage to him did not require reinscription to preserve its lien.

These questions have been settled against the appellant by the Supreme Court of Louisiana.

That court has decided that, under the positive law of Louisiana, as contained in the code and statutes, nothing supplies

the place of registry, or dispenses with it, so far as those are concerned who are not parties to the mortgage, and that when ten years have elapsed from the date of inscription without reinscription, the mortgage is without effect as to all persons whomsoever who are not parties to the mortgage. *Adams & Co.* v. *Daunis*, 29 La. Ann. 315, and cases there cited.

In the case of *Watson* v. *Bondurant* (30 La. Ann. 1, pt. 1), the same court held that no mortgage has any effect as to third persons unless recorded; and, save in the single case of a minor's mortgage on the property of his tutor, every mortgage ceases to have effect, except as to the parties to it, unless reinscribed within ten years from the date of its original inscription, and that neither the existence of the pact *de non alienando* in a mortgage, nor the pendency of a suit to foreclose the same, obviates the necessity of its inscription or reinscription.

The decisions above cited, establishing as they do a rule of real property in the State of Louisiana, are binding on this court, and are conclusive of this case. *Suydam* v. *Williamson*, 24 How. 427; *Jackson* v. *Chew*, 12 Wheat. 162; *Beauregard* v. *City of New Orleans*, 18 How. 497.

The decree of the Circuit Court must, therefore, be affirmed, and it is

So ordered.

LOUISIANA v. UNITED STATES.

In addition to the tax of one and one-half per cent, authorized by sect. 2, art. 3, of her charter, the city of Louisiana, Mo., may, by *mandamus*, be compelled to levy, assess, and collect a special tax, not exceeding one per cent per annum, to pay a judgment rendered against her, whereon an execution has been issued and returned *nulla bona*.

ERROR to the Circuit Court of the United States for the Eastern District of Missouri.

The facts are stated in the opinion of the court.

Mr. David P. Dyer for the plaintiff in error.

Mr. John D. S. Dryden for the defendant in error.

MR. CHIEF JUSTICE WAITE delivered the opinion of the court.

The following are sects. 2 and 13 of art. 3 of the charter of the city of Louisiana, Mo. : —

"SECT. 2. The city council shall have power within the city by ordinance: First, to levy and collect taxes not exceeding one and one-half of one per centum per annum upon all property made taxable by law for State purposes, and to provide for the collection of the same by sale of real and personal estate in such manner as the council may, by ordinance, provide."

"SECT. 13. The council shall not fix or reduce the rate of taxation to less than one and one-half of one per centum per annum until two-thirds of such reduced rates of taxation shall be sufficient, including all sources of revenue, to meet and pay all accruing interest for the year affected by such reduction, without increasing the principal of the debt.'

Sect. 23, art. 7, provides that —

"If at any time the city council shall fail to make suitable provisions for the payment in whole or in part of any of its debts or liabilities contracted after the passage of this act, or heretofore lawfully contracted, for the term of twelve months after such debt or liability shall have become due and demand for payment made, it shall then be lawful for the Circuit Court or Court of Common Pleas, before which judgment of any such debt or liability shall have been obtained to make and enter up any such orders, decrees, and appointments as may be necessary for the levying, assessing, and collecting taxes in the city not exceeding one per centum per annum until such debt or liability shall be fully paid and discharged by the city authorities. The amount so collected to be applied, under the decree of the court, strictly to the payment of such debt or judgment."

Sects. 2415 and 2416 of the Revised Statutes of the State are as follows : —

"SECT. 2415. Whenever an execution issued out of any court of record in this State against an incorporated town or city shall be returned unsatisfied in whole or in part for want of property whereon to levy, such court, at the return term or any subsequent term thereof, may, by writ of *mandamus*, order and compel the chief officer, trustees, council, and all other proper officers of said city or town, to levy, assess, and collect a special tax to pay such execution and all costs."

"SECT. 2416. The court shall determine the time within which the levy and collection of such tax shall be made, and shall make all necessary orders to secure the prompt and speedy payment of such debt."

Wood, having recovered a judgment against the city in the Circuit Court of the United States for the Eastern District of Missouri, for $22,226.40, which had remained unpaid for more than twelve months, and on which an execution had been returned unsatisfied, the United States on his relation asked the court for a writ of *mandamus* to compel the levy and collection of a special tax for its payment. The city in defence claimed that it could not under its charter be required to levy such a tax, because it had already levied the full amount allowed by sect. 2, art 3, and there were other judgments (enumerating them) against it amounting with this to more than $100,000, while its taxable property was only $907,200.

Upon the trial of the cause several questions arose which resolved themselves into the following: 1, Whether the city could under the circumstances of this case be required to levy taxes in any one year for more than one and one-half of one per cent on the value of the taxable property within its jurisdiction; and, 2, if it could, whether the additional amount could exceed one per cent for all creditors having special judgments or contract rights. Upon these questions the judges of the court were divided in opinion, and they certified that fact here. The presiding judge, however, was of the opinion that the relator was entitled to a peremptory writ of *mandamus* requiring the levy and collection of a special tax sufficient to raise and pay $9,000 a year on his debt until it with the costs was fully satisfied, and a judgment was rendered accordingly. To reverse that judgment the case has been brought here by writ of error.

We are entirely satisfied that the view which the circuit judge took of the case was right, and that the judgment should be affirmed. The tax referred to in sect. 2, art. 3, of the charter is evidently the ordinary tax which the necessities of the city demand, and before anything more can be required, a case must be made for relief under sect. 23, art. 7, of the charter, or sects. 2415 and 2416 of the Revised Statutes, which are the same as

sects. 77 and 78, c. 160, of the General Statutes of 1865, p. 650. There cannot be a doubt that the General Statutes embrace this city. They in express terms apply to all incorporated towns and cities. Whether, so far as this city is concerned, the discretionary power vested in the court is limited to a tax of one per cent for each judgment obtained, is a question we need not decide, for in this case that limit has not been exceeded. The taxable value of the property in the city is over $900,000, and the tax each year for this judgment is limited to $9,000. We are, however, entirely clear that under the charter it is within the power of the court to carry the tax up to full one per cent for each debt on account of which such special relief is asked. Both the Revised Statutes and this particular section of the charter contemplate judgments against the city which cannot be collected by execution. In such a case permission is given to apply to the court in which the judgment has been rendered for special relief, or perhaps more properly a special order on the city to make provision for payment. What that provision shall be is left largely to the court to determine under the particular circumstances of each case, with a view to securing the prompt and speedy payment of the debt; but the money, when collected, must be applied strictly to the payment of the particular debt for which the special direction is given. Each tax must be levied and kept separate, but the amount to be levied in a particular case may be made dependent somewhat on other levies for other judgments or debts made payable at the same time. All such questions are with propriety left to the sound judicial discretion of the court, with a view to the prompt and speedy discharge of all the obligations of the city, without unnecessarily oppressing the taxpayers. The corporate authorities are fully empowered to tax to the extent of one and one-half per cent, and should do so if necessary; but if more is required in any particular case, resort must be had to the courts. The city authorities must in all cases make provision to pay all debts at maturity, if they have the power under the law; but if their powers are too much limited to enable them to do so, then the creditors have been given a special remedy on appeal to the courts. The effect of the several statutes is to limit the ordinary powers of the municipality

for taxation, but to give the courts ample authority, when a judgment has been obtained, to enforce execution by requiring the levy at a proper time, of a sufficient tax to meet the judgment. A *mandamus* in such a case is in the nature of an execution to collect the judgment.

Judgment affirmed.

BARBOUR *v.* PRIEST.

1. In order to render a mortgage of real estate made by an insolvent debtor void as a preference and fraudulent conveyance, within the meaning of the thirty-fifth section of the Bankrupt Act of March 2, 1867, c. 176 (14 Stat. 534), it must be affirmatively shown by his assignee in bankruptcy that the grantee had reasonable cause to believe that the grantor was insolvent at the time he executed the mortgage, and that it was made with intent to defeat the bankrupt law.
2. *Grant* v. *National Bank* (97 U. S. 80) approved.

APPEAL from the Circuit Court of the United States for the Northern District of Ohio.

The facts are stated in the opinion of the court.

Mr. A. K. Dunn for the appellants.

Mr. N. N. Leyman, contra.

MR. JUSTICE MILLER delivered the opinion of the court.

The appellee brought his bill in chancery in the District Court for the Northern District of Ohio, as assignee in bankruptcy of Hubbard Colby, to set aside and avoid two mortgages, made to appellant a short time before proceedings were commenced against Colby as a bankrupt. The District Court rendered a decree against the assignee, which was reversed on appeal to the Circuit Court, the latter holding the mortgages void under the bankrupt law. From that decree this appeal is taken.

Mrs. Barbour was the widow of Justus S. Barbour, and guardian of his minor children, and Colby, the bankrupt, was administrator of said Barbour's estate. He was the brother-in-law of Mrs. Barbour, whose husband had been dead many years;

and Colby, after administering the estate, had retained in his hands about $24,000, which he had never paid over to her, as he should have done.

Colby was a man of reputed wealth and the owner of much valuable real estate, and it is obvious from the testimony that Mrs. Barbour reposed unlimited confidence in him, and relied on him for the general management of the estate. On the eleventh day of June, 1873, Mrs. Barbour received a notice from the probate judge to make a settlement, showing the condition of her accounts as guardian, and to file a new bond. She filed a new bond, but did not make the settlement. On September 20, of the same year, she received another notice, requesting her to file a statement of her account the next day. She swears in her testimony that she handed both these notices to Mr. Colby, and requested him to attend to the affair, and that she relied on him entirely in the matter. On the first day of October, Colby made two mortgages on distinct parcels of real estate, for the purpose of securing his indebtedness to Melissa A. Barbour, in her right as widow, and as guardian of the minor children of her husband, in the sum of $22,722.20, then in his hands, as administrator of the estate of Justus Barbour.

Colby was adjudicated a bankrupt on a petition filed Nov. 3, 1873.

The testimony on which the decree was rendered is very voluminous, and need not be critically examined here. We think three propositions of fact are so clearly established that there can be little doubt about them. They are: —

1. That when Colby made the mortgages to Mrs. Barbour he was insolvent, and knew he was in that condition.

2. That he intended by those mortgages to give Mrs. Barbour a preference over his other creditors, by securing the debt due her and her children from him, as administrator of Barbour's estate.

3. That Mrs. Barbour did not know, nor have reasonable cause to believe, that Colby was insolvent when the mortgages were made and filed for record.

It will be perceived that the conveyances which are here in question were made, and the proceedings in bankruptcy were commenced against Colby, before the date at which the Revised

Statutes became the law, and before the act of 1874, amendatory of the bankrupt law, was passed. The validity of these mortgages, then, so far as they are affected by the bankrupt laws of the United States, is to be determined by sect. 35 of the original act of March 2, 1867, c. 176, 14 Stat. 534. So much of that section as relates to the question before us reads as follows: —

"SECT. 35. And be it further enacted, that if any person being insolvent, or in contemplation of insolvency, within four months before the filing of the petition by or against him, with a view to give a preference to any creditor or person having a claim against him, or who is under any liability for him, procures any part of his property to be attached, sequestered, or seized on execution, or makes any payment, pledge, assignment, transfer, or conveyance, of any part of his property, either directly or indirectly, absolutely or conditionally, the person receiving such payment, pledge, assignment, transfer, or conveyance, or to be benefited thereby, or by such attachment, having reasonable cause to believe such person is insolvent, and that such attachment, payment, pledge, assignment, or conveyance is made in fraud of the provisions of this act, the same shall be void, and the assignee may recover the property, or the value of it, from the person so receiving it, or so to be benefited."

The act of making these mortgages by Colby, though he knew that he was insolvent, and knew that he was preferring Mrs. Barbour as a creditor at the expense of others, is not forbidden by the common law, and is not a violation of the statute laws of most of the States of the Union. Nor is it an act for bidden by any general rule of morals or of abstract justice. It was in fact a meritorious act, aside from the positive rule established by the bankrupt law. He had long had this money of a confiding widowed sister-in-law and her orphan children, and while holding it in a fiduciary capacity he had used it for his own purposes. He saw her called to account for it by the Probate Court, and knew he was unable to refund it. He also saw the gulf of bankruptcy before him, and before he was buried beneath its waters he determined at least to secure this debt, — the creation of a trust reposed in him. Who shall arraign him for it in the court of conscience?

If, then, it was forbidden neither by the common law, nor by

the statute of the State, nor by the highest sense of honor, it must be made to appear clearly that it is void under the section of the bankrupt law which we have quoted, or else it must stand.

It is a fundamental condition of the right of the assignee to avoid such a conveyance, that the person receiving it, or to be benefited thereby, should have had reasonable cause to believe that the person making such conveyance was insolvent, and that it was made in fraud of the Bankrupt Act.

The obvious meaning of this provision is to require the concurrence of the creditor who gets security for his debt in the purpose of defeating the Bankrupt Act. Such person must have reasonable cause to believe the grantor in the conveyance was insolvent at the time it was executed, and that it was made with intent to defeat the bankrupt law. Both these must exist as facts which the grantee had reasonable cause to believe. And so careful was Congress to protect the rights acquired by an honest creditor, that unless bankrupt proceedings are commenced by or against the debtor within four months after such a preference, it should stand good, though the creditor knew the debtor was insolvent, and knew that the conveyance was intended to defeat the purpose of the bankrupt law in securing equality of distribution of the debtor's property. And this period was reduced by the act of 1874 to two months.

It has never been denied, so far as we are advised, that it is necessary for the assignee of the bankrupt, in attacking such a conveyance, to prove the existence of this reasonable cause of belief of the debtor's insolvency in the mind of the preferred party.

The testimony fails to establish that Mrs. Barbour had any reasonable cause to believe this of Colby. She was a widow, devoted to her children. Her business affairs were managed for her by others. Colby was her brother-in-law and friend, and had been the friend of her deceased husband. He had been reputed for many years to be a wealthy man. He was known to be the owner of valuable real estate. All this was well understood by Mrs. Barbour, while she did not know, and had no reason to suspect, that he was largely in debt, and his real estate covered by mortgages. Up to the time of the fail-

ure of the First National Bank of Mansfield, Sept. 26, 1873, very few persons had any doubt of Colby's entire solvency. The rapid succession of events in the locality where he and Mrs. Barbour resided, and their influence upon his condition, as described by some of the witnesses, might well have been matters of which she was ignorant. She swears that she was not aware of the effect of these matters on him, and no one is able to say that she had any reason to be. Nothing was brought to her notice or attention which would suggest a suspicion of his insolvency, and her confidence in him was clearly not shaken.

In *Grant* v. *National Bank* (97 U. S. 80) this court said: "The act very wisely, as we think, instead of making a payment or a security void for a mere suspicion of the debtor's insolvency, requires for that purpose, that his creditor should have some reasonable cause to believe him insolvent. He must have knowledge of some fact or facts calculated to produce such a belief in the mind of an ordinarily intelligent man." p. 82. Tested by this rule, which, we think, is the sound one, there is no evidence of any such knowledge brought home to Mrs. Barbour. In fact, we do not believe that at the time the deeds were executed she even suspected Colby's insolvency or contemplated his failure.

It results from this view of the case that the decree of the Circuit Court must be reversed, and a decree rendered establishing the validity of the mortgages to her and adjusting the rights of the parties on that basis.

So ordered.

THE "ILLINOIS."

108 295
L.ed 502
149 156

The rule requiring a steamer to keep out of the way of a sailing-vessel is equally imperative upon the latter to keep her course; and where, by her unnecessary deviation therefrom, a collision is rendered unavoidable, the steamer is not liable therefor.

APPEAL from the Circuit Court of the United States for the Eastern District of Pennsylvania.

The facts are stated in the opinion of the court.

Mr. J. Warren Coulston for the appellant.

Mr. Morton P. Henry, contra.

MR. CHIEF JUSTICE WAITE delivered the opinion of the court.

This is a case of collision in the Delaware Bay, and the facts found are substantially as follows: The "Illinois" was a large steamship, three hundred and sixty feet in length, and of three thousand tons register. She was going up the bay at a speed of ten knots an hour. She had just rounded Dan Baker's shoal on a port wheel, and had got straightened on her course in about mid-channel. The schooner "Ellen Baker" was ahead of her, a little on the port bow, and bound for New Castle, Del. The wind was from the northeastward, and the schooner was by the wind, heading about north-by-west, or north-northwest, and pointing for Reedy Island piers. The vessels were on slightly diverging lines which were about one hundred yards apart. The western or Reedy Island side of the bay was obstructed by ice, while the eastern side was open. When the vessels were probably three or four hundred yards apart, the schooner went in stays and then tacked to the eastward to avoid the ice, which was ahead of and close under her port bow. There was no lookout astern on the schooner, and, until she had changed her course, no one on board had observed the steamer. The steamer had a sufficient lookout. Her master and pilot were on the bridge looking ahead, and they saw the schooner before she tacked. They so directed the steamer's course as to pass the schooner in safety on her starboard side, three hundred feet or thereabouts away, if she kept the course she was on. As

soon as the manœuvre of the schooner was seen on the steamer, orders were given to put the helm hard-a-starboard, to stop the engine, then to back at full speed, and to let go the anchor, with a view to passing under the schooner's stern. These orders were ineffectual to prevent a collision, and the steamer struck the schooner just abaft the main rigging, causing her to capsize and sink.

It seems to us the court below was right, on these facts, in holding the steamer free from blame. The responsibility of avoiding a collision with a sailing-vessel is put by the act of Congress and the sailing rules primarily on a steamer. But the sailing-vessel is under just the same responsibility to keep her course, if she can, and not embarrass the steamer, while passing, by any new movement. A steamer has the right to rely on this as an imperative rule for a sailing-vessel, and govern herself accordingly. Otherwise it would at times be impossible for a steamer to get ahead at all in the thoroughfares of navigation.

In the present case the steamer was in mid-channel. That was the proper place for a vessel of her size, and, under the circumstances, we cannot say her speed was unusual, since, so far as appears, there were no other vessels in the way. Had the schooner kept her course for a minute or two longer, there is scarcely a doubt that the steamer would have got by in safety. It was clearly a fault, therefore, for her to change her course, unless there was a necessity for it. Mere convenience was not enough. The schooner in this court has the affirmative. It rests on her to show error in the decree of the court below, or we must affirm.

It is an important fact that the steamer was not observed from the schooner before the course was changed. While a man stationed at the stern as a lookout is not at all times necessary, no vessel should change her course materially without having first made such an observation in all directions as will enable her to know how what she is about to do will affect others in her immediate vicinity. In the present case, it is not found expressly that the ice was so close under the port bow of the schooner as to make it dangerous for her to keep on as she was going until the steamer got by. She ought to have known

that although the ice was an obstruction on the west side of the bay, she was not far from the place in the channel through which the large steamers which navigated there would be likely to pass if following her. It is not found that there was anything in view from the steamer to indicate to her the necessity for any early change of the course of the schooner. So far as the findings show, the way was open for some distance ahead, and the steamer had the right to assume she might keep her place in mid-channel and go on with safety. We must also infer from what is actually found, as well as from what is not found, that if the schooner had known the circumstances in which she was placed, her change of course would have been delayed until it might be made without danger. Because a steamer must keep out of the way of a sailing-vessel, it by no means follows that a sailing-vessel may unnecessarily throw herself across the bow of an approaching steamer. It is as much the duty of a sailing-vessel to be diligent in the performance of her duty as it is that of a steamer to be mindful of hers. In the case of *The Abbotsford* (98 U. S. 440), it was distinctly found that the tack of the schooner was entirely proper, both for her own safety and in regard to the steamer. She had run out her course, and the steamer, which was yet a considerable distance away, ought to have known it. Consequently the steamer was in fault for getting so close as to put herself in the way of the schooner while doing what the necessities of the navigation actually required, and which a prudent and skilful navigator on the steamer ought to have known she must do at the time it was done. Such is not shown to have been the case here.

Decree affirmed.

MOYER v. DEWEY.

1. The right to sue for and subject to the payment of his debts, effects fraudulently transferred by a party who was subsequently adjudicated a bankrupt, is vested alone in his assignees, and their failure to enforce it within the time prescribed by the bankrupt law does not transfer that right to his creditors.
2. A discharge in bankruptcy is personal to the party to whom it is granted.

ERROR to the Court of Appeals of the State of New York.

The facts are stated in the opinion of the court.

Mr. Samuel Hand and *Mr. Matthew Hale* for the plaintiffs in error.

Mr. James E. Dewey, contra.

MR. JUSTICE MILLER delivered the opinion of the court.

The complaint filed by the defendants in error in the Supreme Court of the State is in the nature of a bill in chancery against the plaintiffs in error and Clinton Eldredge. It charges that the complainants severally recovered judgments in the proper courts against said Eldredge, on which executions were issued and returned *nulla bona*. It then charges, giving the details of the transaction, that the defendants held certain real estate, the title of which was conveyed to them by Eldredge, without consideration and with intent to defraud his creditors. The defendants answer separately and deny the fraud. They also attempt to protect themselves under the discharge of Eldredge in bankruptcy, and as the only question cognizable in this court turns upon this part of the defence, which is more fully set up in the answer of Betsey Moyer than in that of Henry, so much of the answer as refers to this matter is here given verbatim: —

"And the said defendant, upon her information and belief, alleges that on or about the seventeenth day of August, 1868, at Buffalo, in the State of New York, the United States District Court held in and for the Northern District of the State of New York duly made an order and a decree discharging the defendant Clinton Eldredge of and from all his debts, of all of which proceedings in the said court in bankruptcy for such

discharge the said plaintiffs and their said assignors, and each of them, had due notice; that the pretended indebtedness, if any such existed or ever did accrue, accrued prior to the filing of the petition of the said Clinton Eldredge for his discharge from such debts in the said United States District Court, and prior to the granting of such discharge, and that the said indebtedness and the said several claims, if any such exist or ever existed, were such as were provable against the estate of the defendant Clinton Eldredge in the proceedings in which said discharge was granted, and were not, nor was any part thereof, created in consequence of any defalcation as a public officer, or as an executor, administrator, guardian, or trustee, or while acting in any other fiduciary capacity, and he is, therefore, discharged therefrom, and from all liability thereon, and the said plaintiffs are precluded and debarred from enforcing or attempting to enforce the same."

It will be observed that nothing is here said of an assignee in bankruptcy, nor of the right of the assignee, if one existed, to the property conveyed by Eldredge to the defendants in fraud of his creditors. The obvious purpose of this plea is to show that Eldredge's debts to the plaintiffs were discharged, and that they could not, therefore, maintain this suit on such indebtedness. Nor does it appear in any part of the record that the assignee's rights were considered by either the plaintiffs or the defendants, nor was he made a party to the suit.

The case was sent, under the practice of the New York courts, to a referee, and on his report a judgment was rendered in favor of the plaintiffs, which was affirmed in the Court of Appeals. With the general question of fraud in the matter this court can have nothing to do. It appears by the report of the referee that the transaction was fraudulent as charged. It also appears that the judgments against Eldredge set up as the foundation of this suit, although founded on debts existing prior to his discharge in bankruptcy, were confessed by him subsequently thereto, and that, though a defendant in this suit, he, by failing to answer, waives the benefit of the discharge. Under these circumstances, we concur with the opinion of the Court of Appeals, that so far as the discharge itself is concerned, its only effect is personal to him, and does not avail to

release the defendants in this suit from liability for the fraud committed by them.

But we have decided at this term, in *Trimble* v. *Woodhead* (102 U. S. 647), in a case very similar in some of its aspects to this, that the right to bring such an action as this — the right to the property so fraudulently conveyed — is vested in the assignee alone, and that his failure to sue within the two years allowed by the bankrupt law does not transfer this right of property or right of action to a creditor of the bankrupt.

If, therefore, in the present case it had been made to appear by the record properly before the Court of Appeals that an assignee had been appointed, and he had properly qualified and accepted such appointment, we do not see how the plaintiffs could have recovered judgment for the value of the property.

The Court of Appeals of New York take the ground, in their opinion, distinctly, that neither the appointment of an assignee in bankruptcy, nor the existence of any rights in such assignee, nor any defence having reference to such rights, is set up in the answer. And in this opinion we concur.

When the case went to the referee the defendants offered certified transcripts of the proceedings in the District Court, which showed the appointment of the assignee, the assignment to him made by the register, and the discharge of Eldredge. The plaintiffs objected to the admission of these papers in evidence, on the ground that they were not set up in the answer, either according to the statute or in pursuance of the common-law rule.

The referee, while he admitted the papers in evidence, did not, among his finding of facts, which were thirty-four in number, find that the assignee had been appointed, or an act of appointment made by the register. He did, however, find that Eldredge had been duly discharged of his debts. It is probable that he received the transcript objected to as evidence of the validity of Eldredge's discharge, but not as evidence of the assignment, which was not set out in the pleading.

The question whether the assignment, and the rights of the assignee under it, were so set up in the answer as to admit the evidence of them, or whether, on the other hand, the defendants relying, as they seem to have done, solely on the

principle that Eldredge's discharge inured to the benefit of the defendants, can now avail themselves of the transcripts, is one dependent very largely on the practice of the courts of the State. The Court of Appeals rests its decision on the ground that the pleading does not set out or rely on the assignment or on the rights vested by it in the assignee, and it says very justly, that if any such issue had been made, the plaintiffs might have had a sufficient reply, which they were not called on to produce as the pleadings stand.

We concur with that court in holding that the existence of an assignee, or of any right of such assignee to the property or the claims asserted in this suit, is not raised by this record.

Judgment affirmed.

MILES v. UNITED STATES.

103 304
Led 481
144 296

1. On an indictment for bigamy, the first marriage may be proved by the admissions of the prisoner, and it is for the jury to determine whether what he said was an admission that he was actually and legally married according to the laws of the country where the marriage was solemnized.
2. As long as the fact of his first marriage is contested, the second wife is an incompetent witness. Where it has by other evidence been duly established to the satisfaction of the court, she may be admitted to prove her marriage with him.
3. On the trial of such an indictment, the United States challenged a juror for "actual bias." Three triers, appointed by the court conformably to the law of Utah, where the indictment was found, tried the challenge, and declared it to be true. *Held*, that their decision being by that law final, he was properly excluded from the panel.
4. Against the objection of the prisoner, jurors were interrogated by the United States as to their belief that the practice of polygamy is in obedience to the divine will and command. *Held*, that the objection was properly overruled.
5. This court cannot re-examine questions of fact upon a writ of error.
6. In a criminal case, the evidence upon which the jury are justified in finding a verdict of guilty must be sufficient to satisfy them of the prisoner's guilt beyond a reasonable doubt. *Held*, that the instruction by the court of original jurisdiction upon this point (*infra*, p. 309) furnishes him no just ground of exception.

ERROR to the Supreme Court of the Territory of Utah.

The facts are stated in the opinion of the court.

Mr. Arthur Brown, *Mr. W. N. Dusenberry*, and *Mr. E. D Hoge* for the plaintiff in error.

Mr. Assistant Attorney-General Smith, *contra.*

MR. JUSTICE WOODS delivered the opinion of the court.

Sect. 5352 of the Revised Statutes of the United States declares: —

"Every person having a husband or wife living, who marries another, whether married or single, in a Territory or other place over which the United States has exclusive jurisdiction, is guilty of bigamy, and shall be punished by a fine of not more than five hundred dollars and by imprisonment for a term not more than five years."

The plaintiff in error was indicted under this section in the Third District Court of Utah, at Salt Lake City. He was convicted. He appealed to the Supreme Court of the Territory, where the judgment of the District Court was affirmed.

That judgment is now brought to this court for review upon writ of error.

The indictment charged that the plaintiff in error, John Miles, did, on Oct. 24, 1878, at Salt Lake County, in the Territory of Utah, marry one Emily Spencer, and that afterwards, and while he was so married to Emily Spencer, and while she was still living, did, on the same day and at the same county, marry one Caroline Owens, the said Emily Spencer, his former wife, being still living and at that time his legal wife.

The criminal procedure of Utah is regulated by an act of the territorial legislature, passed Feb. 22, 1878. The following are the sections pertinent to this case, which prescribe the rules for the impanelling of juries: —

"SECT. 241. A particular cause of challenge is: —

"1. For such a bias as, when the existence of the facts is ascertained, in judgment of law, disqualifies the juror, and which is known in this act as implied bias.

"2. For the existence of a state of mind on the part of the juror which leads to a just inference, in reference to the case, that he will not act with entire impartiality, which is known in this act as actual bias.

"SECT. 246. If the facts are denied, the challenge *must* be tried as follows: (1.) If it be for implied bias, by the court; (2.) If it be for actual bias, by triers."

"SECT. 247. The triers are three impartial persons, not on the jury panel, appointed by the court. All challenges for actual bias *must* be tried by three triers thus appointed, a majority of whom may decide."

"SECT. 249. Upon the trial of a challenge to an individual juror, the juror challenged may be examined as a witness to prove or disprove the challenge, and must answer every question pertinent to the inquiry."

"SECT. 250. Other witnesses may also be examined on either side, and the rules of evidence applicable to the trial of other issues govern the admission or exclusion of evidence on the trial of the challenge."

"SECT. 252. On the trial of a challenge for actual bias, when the evidence is concluded, the court must instruct the triers that it is their duty to find the challenge true, if, in their opinion, the evidence warrants the conclusion that the juror has such a bias against the party challenging him as to render him not impartial; and that if, from the evidence, they believe him free from such bias, they must find the challenge not true; that a hypothetical opinion unaccompanied with malice or ill-will, founded on hearsay or information supposed to be true, is of itself no evidence of bias sufficient to disqualify a juror. The court can give no other instruction."

"SECT. 253. The triers must thereupon find the challenge either true or not true, and their decision is final. If they find it true, the juror must be excluded."

Upon the trial of the case in the District Court of the Territory, Oscar Dunn and Robert Patrick were called as jurors. They were challenged for actual bias, and sworn upon their *voire dire*. Three triers were appointed by the court to pass upon the challenges to the jurors. Dunn, in answer to questions propounded to him, testified that he believed polygamy to be right, that it was ordained of God, and that the revelations concerning it were revelations from God, and that those revelations should be obeyed, and that he who acted on them should not be convicted by the law of the land.

The juror was challenged by the prosecution "for actual bias for the existence of a state of mind on his part which led

to a just inference that he would not act with entire impartiality."

The triers found the challenge true, and the juror was rejected.

Robert Patrick was examined on his *voire dire*, and testified that he believed that the revelation given to Joseph Smith touching polygamy came from God, that it was one of God's laws to his people, and that he who practised polygamy, conscientiously believing that revelation to be from God, was doing God's will. He also testified that, in his opinion, the law of Congress was in conflict with that law of God; that Congress had the right to pass such a law; and that on the trial of a person who was in the practice of polygamy charged with bigamy he would consider it his duty, if satisfied by the evidence, to find the defendant guilty, and that he would do so.

The juror was challenged for actual bias, and the triers found the challenge true, and the juror was excused. A large number of other jurors were examined and challenged, and excused on the same grounds.

Upon the trial, evidence was given tending to show that a short time before the date laid in the indictment, Oct. 24, 1874, the plaintiff in error was in treaty for marrying, at or about the same time, three young women, namely, Emily Spencer, Caroline Owens, and Julia Spencer, and that there was a discussion between them on the question which should be the first wife; and that upon appeal to John Taylor, president of the Mormon Church, the plaintiff in error and the three women being present, it was decided by him that Emily Spencer, being the eldest, should be the first wife; Caroline Owens, being the next younger, the second; and Julia Spencer, being the youngest, the third wife; — that being according to the rules of the church.

It appeared further that marriages of persons belonging to the Mormon Church usually take place at what is called the Endowment House; that the ceremony is performed in secret, and the person who officiates is under a sacred obligation not to disclose the names of the parties to it.

It further appeared that on Oct. 24, 1878, the plaintiff in error was married to the said Caroline Owens, and that on the

night of that day he gave a wedding supper at the house of one Cannon, at which were present Emily Spencer, Caroline Owens, and others. Evidence tending to establish these facts having been given to the jury, the court permitted to be given in evidence the declarations made by the plaintiff in error, on that night, in presence of the company assembled, and on subsequent occasions, to the effect that Emily Spencer was his first wife.

Sect. 1604 of the Compiled Laws of Utah declares: "A husband shall not be a witness for or against his wife, nor a wife a witness for or against her husband."

Upon the trial, and after the evidence above recited had been given, tending, as the prosecution claimed, to prove the marriage of the plaintiff in error to Emily Spencer just before his marriage to Caroline Owens, the latter was offered as a witness against him to prove the same fact.

Thereupon the defendant admitted, in open court, the charge of the indictment that he had been married to Caroline Owens, and even offered testimony to prove it; but this was ruled out by the court.

The defendant, therefore, objected to the introduction of Caroline Owens as a witness against him, the objection being based on the statute just quoted.

The court overruled the objection and admitted her as a witness, and she gave testimony tending to prove the marriage of the plaintiff in error to Emily Spencer previous to his marriage with the witness.

It appeared from the evidence that the name of Caroline Owens's father was Maile, but that she had been adopted by an uncle and aunt named Owens, and had taken their name, by which she was called and known, but that, when she was baptized in the Mormon Church, she was required to be baptized in her father's name, and was married to Miles under that name.

The court, among other things, charged the jury as follows: —

"If you find from all the facts and circumstances proven in this case, and from the admissions of the defendant, or from either, that the defendant Miles married Emily Spencer, and

while she was yet living and his wife he married Caroline Owens, as charged in the indictment, your verdict should be guilty.

"A legal wife cannot, but when it appears in a case that the witness is not a legal wife, but a bigamous or plural wife, then she may testify against the bigamous husband, and her testimony should have just as much weight with the jury as any other witness, if the jury believe her statements to be true. And her evidence may be taken like the evidence of any other witness to prove either the first or second marriage. And so in this case you are at liberty to consider the testimony of Miss Caroline Owens, if you find from all the evidence in the case that she is a second and plural wife, and give it all the weight you think it entitled to, and may use it to prove the first marriage alleged, to wit, the marriage of defendant and Emily Spencer, or any other fact which in your opinion is proven by the testimony, if you believe it, as you do the testimony of any witness to prove any fact about which she has testified.

"The prisoner's guilt must be established beyond reasonable doubt. Proof beyond a reasonable doubt is such as will produce an abiding conviction in the mind to a moral certainty that the fact exists that is claimed to exist, so that you feel certain that it exists. A balance of proof is not sufficient. A juror in a criminal case ought not to condemn unless the evidence excludes from his mind all reasonable doubt; unless he be so convinced by the evidence, no matter what the class of the evidence, of the defendant's guilt, that a prudent man would feel safe to act upon that conviction in matters of the highest concern and importance to his own dearest personal interests."

The plaintiff in error alleges as ground of error the exclusion from the jury of Oscar Dunn, Robert Patrick, and others of the Mormon faith. He claims that the examination of the proposed jurors, and the rulings of the court, show that it was the deliberate purpose of the court to exclude from the jury every one who was of the Mormon faith. He insists that neither the court nor counsel had the right to inquire into the religious belief of the juror.

There is no complaint that the jury was not a fair and impartial one, or that any juror impanelled was disqualified.

Whether the exclusion of qualified jurors from the panel is a ground for setting aside the verdict and judgment on error, we do not find it necessary to decide.

It is insisted on behalf of the defendant in error that the excluded jurors were not qualified to sit in the case. In impanelling the jury the court was bound to follow the law of the Territory on that subject. *Clinton* v. *Englebrecht*, 13 Wall. 434; *Reynolds* v. *United States*, 98 U. S. 145.

The jurors excluded were objected to by the prosecution as disqualified from serving for actual bias.

The challenge for actual bias was tried by the triers appointed by the court, in accordance with the law of the Territory. The triers found the challenge true. By the same law their decision is declared to be final, and thereupon the jurors challenged must be excluded. The law was carefully followed. The jurors were found disqualified, and were, therefore, as required by the law, excluded from the panel.

It is evident from the examination of the jurors on their *voire dire*, that they believed that polygamy was ordained of God, and that the practice of polygamy was obedience to the will of God. At common law, this would have been ground for principal challenge of jurors of the same faith. 3 Bla. Com. 303. It needs no argument to show that a jury composed of men entertaining such a belief could not have been free from bias or prejudice on the trial for bigamy, of a person who entertained the same belief, and whose offence consisted in the act of living in polygamy. But whether the evidence of bias was sufficient or not, it was so found by the triers, and that was conclusive.

Whether or not that bias was founded on the religious belief of the juror, is entirely immaterial, if the bias existed. It has been held by this court, that on an indictment for bigamy it was no defence that the doctrines and practice of polygamy were a part of the religion of the accused. *Reynolds* v. *United States*, *supra*.

It could not, therefore, be an invasion of the constitutional or other rights of the juror called to try a party charged with bigamy, to inquire whether he himself was living in polygamy,

and whether he believed it to be in accordance with the divine will and command.

If the jurors themselves had no ground of complaint, it is clear the defendant had none.

We find nothing in the record in relation to the impanelling of the jury which would have required the Supreme Court of the Territory to set aside the verdict and the judgment of the District Court.

It is next assigned for error, that the court admitted the declarations and admissions of the plaintiff in error to prove the fact of his first marriage, and the charge of the court that the declarations of the accused were evidence proper to be considered by the jury as tending to prove an actual marriage, and that such marriage might be proven like any other fact, by the admissions of the defendant, or by circumstantial evidence, and that it was not necessary to prove it by witnesses who were present at the ceremony.

To hold that, on an indictment for bigamy, the first marriage can only be proven by eye-witnesses of the ceremony, is to apply to this offence a rule of evidence not applicable to any other.

The great weight of authority is adverse to the position of the plaintiff in error.

In *Regina* v. *Simmonsto* (1 Car. & Kir. 164), it was held that, on an indictment for bigamy, the first marriage may be proved by the admissions of the prisoner; and it is for the jury to determine whether what he said was an admission that he had been legally married according to the laws of the country where the marriage was solemnized.

The same view is sustained by the following cases: *Regina* v. *Upton*, cited in 1 Russell, Crimes (Greaves's ed.), 218; *Duchess of Kingston's Case*, 20 How. State Trials, 355; *Truman's Case*, 1 East, P. C. 470; *Cayford's Case*, 7 Me. 57; *Ham's Case*, 11 id. 391; *State* v. *Libby*, 44 id. 469; *State* v. *Hilton*, 3 Rich. (S. C.) 434; *State* v. *Britton*, 4 McCord (S. C.), 256; *Warner* v. *Commonwealth*, 2 Va. Cas. 595; *Norwood's Case*, 1 East, P. C. 470; *Commonwealth* v. *Murtagh*, 1 Ashm. (Pa.) 272; *Regina* v. *Newton*, 2 Moo. & R. 503; *State* v. *McDonald*, 25 Miss. 176; *Wolverton* v. *State*, 16 Ohio, 173; *State* v. *Seals*,

16 Ind. 352; *Quin* v. *State*, 46 id. 725; *Arnold* v. *State*, 53 Ga. 574; *Cameron* v. *State*, 14 Ala. 546; *Brown* v. *State*, 52 id. 338; *Williams* v. *State*, 44 id. 24; *Commonwealth* v. *Jackson*, 11 Bush (Ky.), 679.

The declarations of the plaintiff in error touching his marriage with Emily Spencer, admitted in evidence against him, appear to have been deliberately and repeatedly made, and under such circumstances as tended to show that they had reference to a formal marriage contract between him and her.

We are of opinion that the District Court committed no error in admitting such declarations, or in its charge to the jury concerning them.

The charge of the court defining what is meant by the phrase "reasonable doubt" is assigned as ground of error.

The evidence upon which a jury is justified in returning a verdict of guilty must be sufficient to produce a conviction of guilt, to the exclusion of all reasonable doubt. Attempts to explain the term "reasonable doubt" do not usually result in making it any clearer to the minds of the jury. The language used in this case, however, was certainly very favorable to the accused, and is sustained by respectable authority. *Commonwealth* v. *Webster*, 5 Cush. (Mass.) 295; *Arnold* v. *State*, 23 Ind. 170; *State* v. *Nash*, 7 Iowa, 347; *State* v. *Ostrander*, 18 id. 435; *Donnelly* v. *State*, 2 Dutch. (N. J.) 601; *Winter* v. *State*, 20 Ala. 39; *Giles* v. *State*, 6 Ga. 276.

We think there was no error in the charge of which the plaintiff in error can justly complain.

The plaintiff in error next alleges that the description of the woman named in the indictment as the person with whom the crime of bigamy was committed, was not sufficiently specific, and that on the trial she turned out to be not Caroline Owens, but Caroline Maile.

The designation of Caroline Owens as the person with whom the second marriage was contracted is clearly sufficient. If it were not, it is too late after verdict to object. As to the fact, the jury has found that the person whom the plaintiff in error was charged to have married while his first wife was living, and still his legal wife, was Caroline Owens and not Caroline Maile, and that question is, therefore, conclusively settled by the ver-

dict. This court cannot re-examine questions of fact upon writ of error. Rev. Stat., sect. 1011.

The plaintiff in error lastly claims that the court erred in allowing Caroline Owens, the second wife, to give evidence against him touching his marriage with Emily Spencer, the alleged first wife; and in charging the jury that they might consider her testimony, if they found from all the evidence in the case that she was a second and plural wife.

This assignment of error, we think, is well founded.

The law of Utah declares that a husband shall not be a witness for or against his wife, nor a wife for or against her husband.

The marriage of the plaintiff in error with Caroline Owens was charged in the indictment and admitted by him upon the trial. The fact of his previous marriage with Emily Spencer was, therefore, the only issue in the case, and that was contested to the end of the trial. Until the fact of the marriage of Emily Spencer with the plaintiff in error was established, Caroline Owens was *prima facie* his wife, and she could not be used as a witness against him.

The ground upon which a second wife is admitted as a witness against her husband, in a prosecution for bigamy, is that she is shown not to be a real wife by proof of the fact that the accused had previously married another wife, who was still living and still his lawful wife. It is only in cases where the first marriage is not controverted, or has been duly established by other evidence, that the second wife is allowed to testify, and she can then be a witness to the second marriage, and not to the first.

The testimony of the second wife to prove the only controverted issue in the case, namely, the first marriage, cannot be given to the jury on the pretext that its purpose is to establish her competency. As her competency depends on proof of the first marriage, and that is the issue upon which the case turns, that issue must be established by other witnesses before the second wife is competent for any purpose. Even then she is not competent to prove the first marriage, for she cannot be admitted to prove a fact to the jury which must be established before she can testify at all.

Witnesses who are *prima facie* competent, but whose competency is disputed, are allowed to give evidence on their *voire dire* to the court upon some collateral issue, on which their competency depends, but the testimony of a witness who is *prima facie* incompetent cannot be given to the jury upon the very issue in the case, in order to establish his competency, and at the same time prove the issue.

The authorities sustain these views.

Upon a prosecution for bigamy under the statute of 1 Jac., c. 11, it was said by Lord Chief Justice Hale: "The first and true wife is not allowed to be a witness against her husband, but I think it clear the second may be admitted to prove the second marriage, for she is not his wife, contrary to a sudden opinion delivered in July, 1664, at the Assizes in Surrey, in Arthur Armstrong's case, for she is not so much as his wife *de facto*." 1 Hale, P. C. 693.

So in East's Pleas of the Crown the rule is thus laid down: "The first and true wife cannot be a witness against her husband, nor *vice versa;* but the second may be admitted to prove the second marriage, for the first being proved she is not so much as wife *de facto*, but that must be first established." 1 East, P. C. 469. The text of East is supported by the following citation of authorities: 1 Hale, P. C. 693; 2 M. S. Sum. 331; *Ann Cheney's Case*, O. B. May, 1730, Sergt. Foster's Manuscript.

In Peake's Evidence (Norris), 248, it is said: "It is clearly settled that a woman who was never legally the wife of a man, though she has been in fact married to him, may be a witness against him; as in an indictment for bigamy, the first marriage being proved by other witnesses, the second wife may be examined to prove the marriage with her, for she is not *de jure* his wife."

Mr. Greenleaf, in his work on Evidence, vol. iii. sect. 206, says: "If the first marriage is clearly proved and not controverted, then the person with whom the second marriage was had may be admitted as a witness to prove the second marriage, as well as to other facts not tending to defeat the first or legalize the second. There it is conceived she would not be admitted to prove a fact showing that the first marriage was void, — such

as relationship within the degrees, or the like, — nor that the first wife was dead at the time of the second marriage, nor ought she to be admitted at all if the first marriage is in controversy."

The result of the authorities is that, as long as the fact of the first marriage is contested, the second wife cannot be admitted to prove it. When the first marriage is duly established by other evidence, to the satisfaction of the court, she may be admitted to prove the second marriage, but not the first, and the jury should have been so instructed.

In this case the injunction of the law of Utah, that the wife should not be a witness for or against her husband, was practically ignored by the court. After some evidence tending to show the marriage of plaintiff in error with Emily Spencer, but that fact being still in controversy, Caroline Owens, the second wife, was put upon the stand and allowed to testify to the first marriage, and the jury were, in effect, told by the court that if, from her evidence and that of other witnesses in the case, they were satisfied of the fact of the first marriage, then they might consider the evidence of Caroline Owens to prove the first marriage.

In other words, the evidence of a witness, *prima facie* incompetent, and whose competency could only be shown by proof of a fact which was the one contested issue in the case, was allowed to go to the jury to prove that issue and at the same time to establish the competency of the witness.

In this we think the court erred.

It is made clear by the record that polygamous marriages are so celebrated in Utah as to make the proof of polygamy very difficult. They are conducted in secret, and the persons by whom they are solemnized are under such obligations of secrecy that it is almost impossible to extract the facts from them when placed upon the witness stand. If both wives are excluded from testifying to the first marriage, as we think they should be under the existing rules of evidence, testimony sufficient to convict in a prosecution for polygamy in the Territory of Utah is hardly attainable. But this is not a consideration by which we can be influenced. We must administer the law as we find it. The remedy is with Congress, by enacting such a change

in the law of evidence in the Territory of Utah as to make both wives witnesses on indictments for bigamy.

For the error indicated the judgment of the Supreme Court of the Territory of Utah must be reversed and the cause remanded to that court, to be by it remanded to the District Court, with directions to set aside the verdict and judgment and award a *venire facias de novo*.

So ordered.

LAND COMPANY *v.* SAUNDERS.

1. The general rule that monuments control courses and distances reasserted in reference to lands situated in New Hampshire.
2. A well-known tract of land, embraced in an old patent, and long referred to by name in the laws of the State, containing settlements which had been subject to the census and tax laws, if called for in a subsequent grant made by the State, as the boundary of a new grant, is such a monument as will draw to it the limits of such subsequent grant, although its exterior lines were never actually run and located on the ground; and the State will be precluded from injecting a still later grant between the two prior ones.
3. The premises in a grant were described as beginning at a fixed point, and thence "running east seven miles and one hundred and seventeen rods to Hart's Location; thence southerly by the westerly boundary of said location to a point so far south that a line drawn thence due south shall strike the northwest corner of the town of Burton; thence south to said northwest corner of Burton; thence westerly," &c., to the beginning. *Held*, 1. That if, when the grant was made, there was a tract well known as Hart's Location, lying easterly and in the vicinity of the land granted, and if it had a westerly boundary to which the granted tract could, by any reasonable possibility, extend, then Hart's Location was a monument which controlled the courses and distances of the survey; and this, though the western boundary of Hart's location had never been actually surveyed on the ground; and though the northwest corner of Burton did not lie due south from any part of said western boundary. 2. That, in such case, the connection between the two monuments — the western boundary of Hart's Location and the northwest corner of Burton — would be the shortest line between them, though the course should be different from that named in the grant.

ERROR to the Circuit Court of the United States for the District of New Hampshire.

The facts are stated in the opinion of the court.

Mr. William L. Putnam and *Mr. Ossian Ray* for the plaintiff in error.

Mr. Josiah G. Abbott, contra.

MR. JUSTICE BRADLEY delivered the opinion of the court.

This is a writ of entry brought by the Bartlett Land and Lumber Company, against Saunders, to recover possession of a certain tract of land in Grafton County, New Hampshire, described as follows: —

"Beginning at the northwest corner of the town of Albany, and thence running north about 3 degrees east, 3 miles and 65 rods, to a spruce tree marked; and from thence north about 6 degrees east, 4 miles and 95 rods, to a fir tree marked; and from thence south about 87½ degrees east, to the westerly line of Hart's Location, and to the easterly line of Grafton County, as established by the act approved July 3, 1875, entitled 'An Act establishing the east line of Grafton County;' and from thence along the east line of Grafton County to the bound begun at, and containing 8,000 acres of land, more or less."

The defendant filed a plea, defending his right in, and denying disseisin of, all the land described in the plaintiff's writ which is included in the following-described tract, viz.: —

"Beginning at the northwest corner of the town of Albany, formerly called Burton, and thence running north about three degrees east, three miles and sixty-five rods, to a spruce tree marked; and from thence north about six degrees east, four miles and ninety-five rods, to a fir tree marked; and from thence south about eighty-seven and one-half degrees east, to the westerly line of Hart's Location; thence southerly by the westerly line of Hart's Location to the point in said westerly line nearest to the northwest corner of said Albany; thence in a straight line to the northwest corner of said Albany."

He disclaimed title to the remainder of the land claimed in the demandant's writ.

Upon these issues the cause came on to be tried, and after the demandant's evidence was adduced, the court instructed the jury that, upon the case made thereby, the demandant was not entitled to recover. A verdict was given for the defendant, and judgment rendered accordingly. The present writ of error is brought to reverse this judgment.

The specific points raised upon the trial, upon which the court was called upon to pass, are presented by a bill of exceptions, which exhibits the evidence in detail. Such parts of this evidence as may be necessary to understand the matters of law raised by the writ of error will be adverted to.

The demandant, on the trial, produced and deraigned title under a quitclaim deed from James Willey, land commissioner of the State of New Hampshire, to Alpheus Bean and others, dated Nov. 26, 1831, made by authority of a resolve of the legislature, which included the lands claimed in the writ.

The demandant also produced a prior deed, under which the defendant claimed the land described in his plea, being a deed from Abner R. Kelly, treasurer of the State of New Hampshire, to Jasper Elkins and others, dated Aug. 31, 1830, and made by authority of a resolve of the legislature, which deed purported to convey the following-described tract in the county of Grafton, New Hampshire, to wit: —

"Beginning at the northeast corner of the town of Lincoln, and rnnning east seven miles and one hundred and seventeen rods to Hart's Location; thence southerly by the westerly boundary of said location to a point so far south that a line drawn thence due south shall strike the northwest corner of the town of Burton; thence south to said northwest corner of Burton; thence westerly along the northern line of Waterville to the eastern boundary of Hatch and Cheever's grant; thence northerly and westerly by said grant to the east line of Thornton; thence by said line of Thornton northerly to the line of Lincoln, and along this line to the point first mentioned."

The principal question in the cause was whether the premises thus granted to Elkins and others by the last-named deed embraced the land described in the defendant's plea; if they did, as was held by the judge at the trial, the defendant's was the elder title to the land in dispute, and the title of the demandant failed, and there is no error in the instructions as to the documentary title.

The beginning corner of the premises granted to Elkins and others was conceded to be a well-known point, and the general position of the first line of survey, which is described as "running east 7 miles and 117 rods to Hart's Location," was not dis-

puted; nor was the position of the northwest corner of the town of Burton (now Albany) disputed, it being a common point to which both parties referred; nor were the lines of the Elkins survey from the northwest corner of Burton, "westerly along the northerly line of Waterville, &c., to the point first mentioned," brought in question. The only point in dispute was the eastern boundary of the Elkins tract; the defendant contending that, by virtue of the deed of 1830, it extended eastwardly to Hart's Location, covering the disputed territory; and the demandant contending that it did not extend further to the eastward than the northwest corner of Burton (or Albany), and a line drawn north from that point.

The language of the grant is, "east 7 miles and 117 rods *to Hart's Location;* then southerly *by the westerly boundary of said location* to a point so far south that a line drawn thence due south shall strike the northwest corner of the town of Burton; thence," &c. Now, if, when the grant was made, there was a tract known as Hart's Location lying easterly and in the vicinity of the land granted, and if it had a westerly boundary to which the granted tract could by any reasonable possibility extend, no more apt language for this purpose could have been adopted. It would be a monument which would control courses and distances. If more or less distant from the point of beginning than seven miles and one hundred and seventeen rods, still it would control the survey. If a line drawn due south from any point of its western boundary would not strike the northwest corner of Burton, then they must be connected by a line not running due south. The line of shortest distance between said boundary and said northwest corner would be the proper one, and this is the one that was adopted. Hart's Location is called for, and to that location we are bound to go.

The evidence was overwhelming and uncontradicted to show the existence and notoriety of Hart's Location. It is a large tract of land lying on both sides of the Saco River, directly to the eastward of the Elkins tract. On the 27th of April, 1772, this tract was granted by Governor Wentworth, in the name of the king, to one Thomas Chadbourne. The plaintiff produced in evidence a copy of that grant, having a plat or survey of the tract annexed to it. The premises granted are described as follows: —

"Beginning at a birch tree being the southwesterly corner bounds of a tract of land granted to Mr. Vere Royse; from thence running north four hundred and seventy rods, from thence extending westerly the same breadth of four hundred and seventy rods, the distance of two hundred and eighty-five rods, from thence running northwesterly six hundred rods, from thence running nearly a north course thirteen hundred rods until it meets the notch or narrowest passage leading through the White Mountains lying upon Saco River."

The plat, or survey, annexed to the grant shows the Saco River running through it. It follows the river on both sides from the beginning of the survey up to the mountains. It is conceded that the beginning corner is well known; and the general location of the tract is undisputed. By the name of Hart's Location it has been well known for nearly a century past. Its census has been published in the laws like that of a regular township, and it seems to have been treated in some sort as a *quasi* township. In the State census published with the laws of 1815, and again in 1820, the population of Hart's Location is put down as thirty-five for the year 1810, and at sixty-five for 1820. In the acts for the apportionment of the State tax among the several townships of the State, the *pro rata* share of Hart's Location was fixed at eight cents on a thousand dollars in 1816; at twelve cents in 1820; at ten cents in 1824; and at eight cents in 1829. By an act approved Dec. 24, 1828, it was resolved, "That Hart's Location, in the county of Coos, be annexed and classed with the towns of Bartlett and Adams, in said county, for the purpose of electing a representative to the general court, until the legislature shall otherwise order." The demandant's principal witness stated that it had been a political organization at one time, and sent a representative to the general court.

But it was claimed by the demandant, and proof was offered to show, that the western boundary of Hart's Location, being in a wild and mountainous region, had never been located on the ground in 1830, and could not be located from the description contained in the grant, because it was too vague and uncertain to admit of a fixed and definite survey. But the plat annexed to the grant, and referred to by the grant for greater certainty,

did show a boundary line, laid down to a scale. If there was no other evidence on the subject, this would be sufficient to show that Hart's Location had a boundary, and a definite one, whether it was ever actually run out on the ground or not. In or about 1803, on occasion of a general perambulation of the townships of the State, made in pursuance of an act of the legislature, a survey of Hart's Location was made by one Merrill, by public authority, and deposited in the office of the secretary of state. This was also produced in evidence on the trial, and showed a well-defined map of the location, laid down to a scale, — differing somewhat from the plat annexed to the original grant, but not more than might be naturally expected if the original was not used.

There can be no doubt, therefore, that when Hart's Location was referred to in public acts and resolves, whether for the purpose of taking the census, taxation, or political jurisdiction, it was referred to as a defined tract or portion of territory, within the bounds of which the State claimed no proprietary interest. In 1830, when the legislature, by a resolve, authorized, and by its treasurer made, to Elkins and his associates, a grant of land to extend from the town of Lincoln on the west to Hart's Location on the east, the exterior line extending along "by the westerly boundary of said location," it is difficult to find any ground for uncertainty or ambiguity in the grant, or to imagine how, after that, the State, or any persons claiming under the State, could, with any show of reason, claim that there was no such thing in being as a Hart's Location having a western boundary; or that the Elkins grant did not extend to and bound upon it. All rights of the State up to and adjoining said location were as clearly disposed of as if the two grants, that of Hart's Location and that to Elkins and others, had been made in the same instrument, — granting to one party, first, Hart's Location as described in Chadbourne's patent, and then granting to Elkins and his associates all the residue of the lands westward to the town of Lincoln between designated side lines on the north and south.

The truth is, that Hart's Location itself was the monument indicated, whatever might be the location of its western boundary. The existence of the location as a territorial sub-

division of New Hampshire was as notorious and certain as the existence of any township in the State. It must of necessity have had a boundary, whether that boundary had ever been actually surveyed on the ground or not. The State owned all the land lying westerly of it, — between it and the township of Lincoln, — and this land had never been granted to any person. It was wild, mountainous land of little value. The whole area, equal to the extent of a large township, and containing probably seventy or eighty square miles, was in 1830 valued at only $800. All this tract thus lying to the west of Hart's Location was granted to Elkins and his associates. They may have been under an erroneous impression as to the true location of the western boundary of Hart's Location, but, whatever it was, and whenever found, that was to be the boundary of the grant.

It may be true, as stated by the Supreme Court of Massachusetts in *Morse* v. *Rogers* (118 Mass. 573, 578), that where a boundary is inadvertently inserted or cannot be found, or an adherence to it would defeat the evident intent of the parties, "the boundary may be rejected, and the extent of the grant be determined by measurement, or other portions of the grant." But that is not the case here. The evident intent of the parties was to go to Hart's Location as a territory or known body of land, without particular regard to a marked, designated, and visible line. It was their intent to leave no land belonging to the State between that territory and the tract granted. This was clearly the principal object in view; and as Hart's Location must necessarily have a western boundary somewhere, and as its limits and bounds were shown, whether correctly or incorrectly, by public maps in the archives of the State, it could not be said that this boundary was incapable of ascertainment. To hold this, and abandon the call of the deed for Hart's Location, and to confine the grantees to courses and distances, would defeat instead of furthering the intention of the parties. If the western boundary of Hart's Location had never been surveyed on the ground, it could be surveyed; or it could be located by agreement between the owners of it and the owners of the Elkins grant. They were the only parties who after that grant had any interest in the matter.

It may well be asked, if the call for Hart's Location and its

western boundary can have no significance in the Elkins grant in 1830, how does it suddenly acquire significance in 1831, in the grant under which the demandant claims? The language used is almost exactly the same: "thence easterly to Hart's Location; thence southeasterly by said Hart's Location," &c.

With the accumulated evidence on the subject which was presented in the demandant's case, most of it of such a character as not to admit of contradiction, we think that the judge was perfectly right in assuming that Hart's Location was a monument sufficiently definite to control the courses and distances given in the grant. Indeed, we do not see how he could have done otherwise. The fact that the town of Burton, which lay to the south of Hart's Location, extended so far westerly that its northwest corner would not be met by a line drawn due south from any part of Hart's Location, cannot prevent the Elkins grant from extending to Hart's Location as its eastern boundary, as called for in the deed. As before stated, the connection between this location and the northwest corner of Burton, if it cannot be made by a line drawn due south as called for, must necessarily be made by the line of shortest distance between them. This is the surveyors' rule and the rule of law. *Campbell* v. *Branch*, 4 Jones (N. C.) L. 313. It is constantly applied when trees or monuments on or near the margin of a river are called for in a deed where the river is a boundary.

We think that the judge did not err in relation to the construction and effect of the Elkins deed.

But the demandant raised another point at the trial, namely, that the owners of the Elkins grant had estopped themselves from claiming under it any land eastwardly of a line running north from the northwest corner of the town of Burton, or Albany. The evidence offered on this point tended to show that about or soon after the date of the Elkins grant the grantees or some of them employed surveyors to ascertain the extent and boundaries of the grant, and that a line was run directly (or nearly) north from the northwest corner of Burton to the north line of the grant, as the supposed eastern boundary adjoining Hart's Location; but that this was done without any communication or agreement with the proprietors of Hart's

Location or any other parties having an interest in the adjoining lands, and in ignorance of the true western boundary of that location on the land. The evidence consisted of the testimony as to the declarations of some or one of the grantees, as to the running of such line, made over forty years before, and of a recent examination of marked trees which indicated a date corresponding with the period referred to.

We think that the judge was right in holding that this evidence was totally insufficient, under the law of New Hampshire, or any other law, to show such a *settlement* of the line as to estop the owners of the grant from claiming to the extent of the description contained in the deed. Conceding that everything was proved which the evidence tended to prove, it would only show that the grantees made a tentative effort to find the limits of their property in a mountainous and almost inaccessible wilderness, without consultation or communication with any other parties, and without doing any act or thing that could in the least commit them in relation to such parties. The only line shown to have been the subject of any agreement was that located by Wilkins in 1850, parallel to, and two hundred and thirty-five chains from, the Saco, which was concurred in by Walker, the agent of the owners of the Elkins grant, and one Davis, who professed to own one-half of Hart's Location.

It is alleged by the counsel of the demandant that the law of New Hampshire on the subject of estoppel as to boundary lines is peculiar; that an agreement settling such lines, though made by parol, is binding upon the parties and all those claiming under them. Conceding this to be true, not the slightest evidence was offered to show any agreement whatever, or even any communication, between the adjoining owners prior to 1850, and the line then agreed upon coincides substantially with that which is now claimed by the defendant.

It is contended, however, that the running of the hypothetical line northerly from the Burton corner was an estoppel as regards the State; that the State, upon the faith of this line being run and marked by the Elkins grantees, entered upon the land eastward of it, and granted the same to Bean and others. That is, the State, by legislative resolve and solemn grant, having in 1830 granted to Elkins and others all the land

west of Hart's Location, had the right to re-enter upon some eight thousand acres of the same land in 1881 and grant it out to third parties, because the Elkins grantees, in making an *ex parte* survey, had mistaken the position of the west boundary of Hart's Location. There is no pretence, certainly no proof, that this survey was made by any concurrence of the parties, or that there was even any communication between the agents of the State and the Elkins grantees. The agents of the State simply lay by and watched the operations of Elkins and company, and finding, or supposing, that they had made a mistake, and had left a vacant tract of land between the line they ran and Hart's Location, stepped in and made another grant to other parties of nearly a sixth part of the tract granted to the Elkins party. Not a particle of evidence was produced to show any acquiescence on the part of Elkins and his associates in this proceeding, or that they had any notice or knowledge of it. So far as appears, they have never acknowledged the right of these new grantees, nor have they ever admitted that any one had any right to interfere with the extension of their land eastwardly to Hart's Location. We think no case can be found that would make out an estoppel under such circumstances as these.

We have been referred with much confidence to the case of *The Proprietors of Enfield* v. *Day*, 11 N. H. 520. We have carefully examined this case, and do not find in it anything to support the proposition contended for. There the State interposed, after due notice to the parties and an inquiry by the legislature in reference to the true and right ownership of a certain gore between two adjoining townships, which by an alleged mistake of a figure had not been included in the grant (of Enfield), in which it was intended to be. The south line was south 68° east in the deed, when it should have been south 58° east. The grant of Grantham was made a few years afterwards, binding on Enfield, but having the right course (south 58° east) for its north line. On the application of the proprietors of Enfield and adjoining townships, the legislature was applied to to correct this error, and commissioners were appointed to run the true line, and the disputed gore was granted to Enfield. The parties acquiesced for twenty years, and the question

was whether Enfield had sufficient seisin and color of title to claim the benefit of the Statute of Limitations; and the court held that it had. But the court expressed itself with great caution as follows: "In this case we are clearly of opinion the seisin would not pass by the mere effect of the second grant; but was there not such a previous re-entry and assertion of right on the part of the government as to constitute, together with the grant, a conveyance with livery of seisin? An entry upon the land by the government agents, and the running anew and re-marking of lines, with the express design of a reconveyance to rectify a former mistake, would seem to be evidence sufficient to show an actual possession in the government of any given tract." Was anything of this kind done in the present case? Were the Elkins grantees notified of any error or mistake? Were they informed of the intention to regrant a portion of the tract granted to them? Did they acquiesce in such proceedings? Nothing of the kind. But the court adds: "The proceedings of the legislature were had on public notice and actual service on the proprietors of Grantham. They also had full knowledge of the subsequent proceedings of the proprietors of Enfield, in their entry upon and frequent sales of portions of this gore of land, claiming the whole under the grant from the State, and must be regarded as acquiescing in such adverse possession and claim. It is now too late for the proprietors of Grantham to assert their title." It is obvious that the cases are totally distinct; and it is unnecessary to discuss the subject further.

The judge, on this part of the case, instructed the jury that there was no evidence before them to estop or bar those claiming under the Elkins grant from maintaining their line by the westerly side of Hart's Location; and in this we think he was right.

Judgment affirmed.

WARD v. TODD.

A court which has once rightfully obtained jurisdiction of the parties may retain it until complete relief is afforded within the general scope of the subject-matter of the suit.

ERROR to the Circuit Court of the United States for the Eastern District of Arkansas.

The facts are stated in the opinion of the court.

Mr. U. M. Rose for the plaintiff in error.

Mr. Charles P. Redmond, contra.

MR. CHIEF JUSTICE WAITE delivered the opinion of the court.

This was a suit against Ward, the plaintiff in error, on a judgment in the Fayette Circuit Court of the State of Kentucky, and the only question is whether, in the record of the judgment sued on, it appears that the State court had jurisdiction to render a personal judgment against Ward. The facts are these: —

On the 17th of June, 1872, Ward executed to the firm of Todd & Rafferty his note for $10,733.28, payable two years after date, with interest at the rate of seven per cent per annum until paid, and secured it by a mortgage on certain property. Afterwards, on the 31st of July, in the same year, he gave his note to the same firm for $3,528, payable, with interest at the same rate, in one year from date, and secured it by mortgage on the same property. On the 8th of August, 1873, Todd, as surviving partner of the firm of Todd & Rafferty, filed a petition in the Fayette Circuit Court, in which he set forth the due execution of these two notes and mortgages and their respective liens on the mortgaged property. He also stated that the note of July 31 was due and unpaid, and that the one of June 17 was a subsisting debt but not due. He also set forth a purchase of the mortgaged property by him at tax sale for $55.09, and that the city of Lexington had a lien on the property for unpaid purchase-money. The notes and mortgages were filed as exhibits to the petition, and the prayer was for a judgment on the small note, which was due, for a sale of the mortgaged

property to pay that note, and that the residue of the proceeds might be retained to satisfy the other note and the claim for taxes. Ward was served personally with process in the case Sept. 8, 1873. On the 17th of September Todd amended his petition by setting forth that he had paid the city of Lexington $680 in full for the amount due as purchase-money of the property, and asking that this sum might be paid out of the proceeds of any sale that should be made. After this, process was again issued and served personally on Ward, September 18. On the 19th of November a decree was entered in the cause by default, finding the amount due on the note of July 31 and the claim for taxes, and establishing the lien for the debt originally due the city. The lien under the mortgage to secure the note under date of June 17 was also recognized and established, and inasmuch as the property could not be sold in parts except to a limited extent, it was ordered that the whole be sold. On the 29th of November Ward appeared, and on his motion this judgment or decree was set aside and he had leave to answer, which he did, setting up, in effect, that the debt of June 17 was not due; that Todd had no lien on the mortgaged property for the amount he had paid the city of Lexington; that he was not entitled to foreclose any lien for taxes, as that was not due, and that the property was capable of division for the purposes of a sale. He therefore asked that only so much of the property be sold as was required to satisfy the debt then due. Thereupon, on the 9th of December, it was adjudged: 1, That Todd recover of Ward the amount of the note of July 31, with interest until paid; and, 2, that so much of the mortgaged property as was necessary to pay that debt be sold. "Upon the other questions raised in the petition and answer" the court took further time. On the 4th of February, 1874, the master reported a sale of part of the mortgaged property sufficient to pay the note of July 31. This sale was confirmed on the 5th of February, 1874, but no decree was entered in respect to the claim for taxes or the amount paid the city to discharge its claim for purchase-money, and on the 15th of August following Todd produced and asked leave to file an amended petition in the cause. To this Ward appeared by his counsel and objected, but the objection was overruled and the leave granted.

In this petition Todd set forth that the note of July 31 had become due, and he asked a judgment for this debt and a further foreclosure of the mortgage. After this, service on Ward by publication was made, he being at the time absent from Kentucky and a resident of Arkansas. No personal service of process was made on him within the State after this amendment. On the 27th of November a decree was entered that Todd recover of Ward the amount of the note of June 17, 1872, with interest; that what remained of the mortgaged property be sold; that so much of the petition as related to the claim of the city of Lexington for the original price of the lot, and to the claim for taxes, be dismissed, and that execution might issue for so much of the debt and costs adjudged to Todd as remained unpaid by the sale of the mortgaged property. Under this decree the property was sold for $7,000. That sale was confirmed, and this suit was brought on the judgment to recover the balance remaining due after the proceeds had been applied as directed by the decree.

This statement of the facts shows clearly that the court had jurisdiction of Ward personally. He was not only served with process in Kentucky, but he appeared personally in the action and filed an answer to the petition. In this answer he put in issue his liability in that suit for the money paid the city of Lexington and the money paid for the taxes. In the first decree these issues were left undecided and the cause retained on that account. Afterwards Todd asked leave to amend his petition, and Ward appeared unconditionally to resist that application. The leave was granted, and a judgment afterwards rendered in accordance with the prayer of the amendment. At the same time the issues left undetermined under the original petition were decided in favor of Ward. The amendment was germane to the matters set forth in the original petition, and the court, having once obtained rightful jurisdiction of the parties, could retain it until complete relief was afforded within the general scope of the subject-matter of the action. *Ober* v. *Gallagher*, 93 U. S. 199. Ward evidently recognized this fact when he appeared by his counsel and resisted the application to amend so as to charge him personally with the amount of the note which had fallen due while the suit had been pen-

ing. The claim is not that the attorney had no authority to appear in the suit, but that his appearance was for a special purpose only. This is clearly contradicted by the record. A part of the issues originally made in the suit were then pending, and it was the duty of counsel to be in attendance on the court to protect his client's interest until the whole subject-matter of the litigation was finally disposed of.

The service by publication after the amendment was, under the circumstances, unnecessary, and did not deprive the court of the jurisdiction which it had acquired before.

Judgment affirmed.

BOULDIN v. ALEXANDER.

1. Pending a suit brought to control the affairs of a church and obtain possession of its property by a portion of the congregation against its founder and another portion, each claiming to be the lawfully elected trustees, every member who desired to worship at the church was permitted to do so, and it was kept exclusively for church purposes. A decree passed for the complainants. *Held*, that they were not entitled to recover for the use and occupation of the church premises, as no claim therefor was made in their bill, and the defendants derived no pecuniary advantage therefrom.
2. The referee having found that money had been collected on behalf of the church by the pastor, who held a deed of trust on the church property to secure notes payable to him, this court directs that he be allowed by the court below to produce them in order that the money be applied as a credit thereon, or, upon his failure to do so, or to satisfactorily account for them, that a decree be entered against him for the money.

APPEAL from the Supreme Court of the District of Columbia.

The facts are stated in the opinion of the court.

Mr. Saul S. Henkle for the appellants.

Mr. Thomas Wilson, contra.

MR. CHIEF JUSTICE WAITE delivered the opinion of the court.

The bill in this case was filed by Joseph Alexander and

others against Albert Bouldin and others, to determine which of two contending boards of trustees of the "Third Colored Baptist Church" was entitled to the possession and control of the church property, including the church building erected by the association as a place of worship; to correct a mistake in a deed executed by Bouldin to the trustees of the church, and to obtain a settlement with him of his accounts as the agent and pastor of the church, and the cancellation and discharge of certain notes secured by real or pretended deeds of trust which had been, from time to time, executed to him. The first and second of these things were accomplished by a decree affirmed in this court at the December Term, 1872, and reported in 15 Wall. 131. The complainants were, by that decree, adjudged to be the lawful trustees; the mistake in the deed was corrected, and the present appellants, defendants below, were ordered to deliver the possession of the church building and the lot on which it stood to the complainants. This left nothing to be disposed of but the matters of account between Bouldin and the church, and the notes which had been given to him. With a view to this end, the original decree, affirmed here on the former appeal, was that the cause be referred to the auditor of the court below "to examine and report the facts on the following questions: —

"1st, Whether the defendant, Albert Bouldin, purchased, under the direction of the church, the entire lot of ground on the corner of Fourth and L Streets of George H. Varnell, for the use and benefit of said church; and whether the money collected by said Bouldin from or on behalf of the church was by him used to aid in the payment of said lot, and, if so, to what amount.

"2d, To state the accounts between the said Albert Bouldin and the plaintiffs, as trustees of the said church, and the trustees of whom they are the successors; to report the amounts of money received by said Bouldin from the said church, and from other persons on behalf of said church, and the amounts to which he was entitled for his services in behalf of said church, and has expended therein and about the same, and to state the balance due either way, and for these purposes that he may call witnesses and take testimony.

"That the plaintiffs, until the further order of this court, are enjoined and restrained from selling, disposing of, or in any way incumbering the title of said church property so as to weaken the security of said Bouldin upon the church property."

When our mandate went down on that appeal, the complainants moved that a writ of possession issue at once; but the court withheld it for the coming in of the auditor's report, and, with the consent of the defendants, the order of reference was made to include the following additional questions: —

"3. In whose possession has the church building and property on the corner of Fourth and L Streets, Washington, D. C., been since the commencement of this suit?

"4. What is the fair value of the rents, issues, and profits arising and accruing to the party in possession of said property from and since this suit?"

There was no claim in the bill for compensation for the use and occupation of the property, though it was alleged that the defendants unlawfully and by force kept the complainants, who were the only duly elected trustees, out of possession.

As to the notes, it was alleged in the bill that on the 28th of July, 1862, six notes were made to Bouldin, five for the sum of $100 each, payable in one, two, three, four, and five years from date, and the other for $120, payable in six years; and that these notes were secured by a deed of trust to one J. W. Barnaclo. In addition to this, according to the averments in the bill, four other notes of $400 each were afterwards executed to Bouldin, on a settlement of his accounts for the erection of the church building. It was also alleged that the defendants who claim to be trustees of the church property had executed a deed of trust to one Callan, to secure all the notes originally given to Bouldin. The claim on the part of the complainants was, that on a full settlement of all the accounts of Bouldin, and a correction of the mistakes that had occurred in former settlements, it would be found there was nothing due on the notes, and that Bouldin would be largely in debt to the church.

The defendants, in their answer, claimed that the notes for $620 were given and secured by deed of trust to Barnaclo, as stated in the bill, and that on the settlement of accounts, when the church building was completed, six notes, of $400 each,

were given to Bouldin, instead of four. The execution of the deed of trust by the defendant trustees was also relied on.

On the hearing of the case before the auditor, Bouldin refused to produce the notes that had been given to him, or account for their absence. It was proved, however, that there had been paid to or collected by him divers sums of money which should be credited on the notes. The aggregate of these sums, including interest from the date of payment to Nov. 1, 1875, is, according to the report of the auditor, $1,233.47. On account of the failure of Bouldin to present the notes, the auditor made no statement of the amount due upon them, but treated them as withdrawn from the suit by Bouldin. The auditor also found that the entire lot of ground on the corner of Fourth and L Streets, bought from Varnell, was for the use of the church, and charged Bouldin with the proceeds of a sale made of part of the lot. He also reported that the defendants had been in the possession of the church property since the commencement of the suit, and that the value of the rents, issues, and profits accruing to them by reason of such possession, was six per cent per annum on the value of the property, or $498.33 a year. He, therefore, in his accounting, charged the defendants with that amount, payable quarterly each year, from Sept. 28, 1867, the date of the commencement of the suit, until Oct. 1, 1875, and interest on each quarterly instalment as it fell due. The total amount of his allowances in this way, on account of rents, was $4,910.26, as of Oct. 1, 1875.

Upon the filing of the report, the complainants excepted because rents had not been charged from July 28, 1867, instead of September 28. The defendants excepted, 1, because they had been charged with mesne profits; 2, because Bouldin was not credited for the amount of his notes; 3, because Bouldin was charged for the proceeds of the part of the lot bought from Varnell which he had sold; 4, because no allowance had been made to Bouldin for his services; and, 5, because of the amount allowed for payments made to Bouldin.

The court below at special term overruled the exceptions of the complainants, and sustained the exceptions of the defendants to the allowance against Bouldin for the proceeds of the sale of part of the lot bought from Varnell, and to the allow-

ance against all the defendants for rents, and returned the case to the auditor for a further stating of the accounts in accordance with certain instructions. From this decree at special term an appeal was taken by the complainants to the general term, where a decree was rendered against all the defendants, the present appellants, for $4,734.12, "as mesne profits for use and occupation by them of the church premises during the pendency of this suit, to wit, from the commencement of the suit until March 31, 1877, when the said premises were returned to the possession of the plaintiffs." The decree then further goes on to say, "The promissory notes given by the plaintiffs as trustees of the church to the defendant, Albert Bouldin, are not included in this decree, the same having been withdrawn from the consideration of the court. But all other claims by him made against the church or its trustees are rejected and disallowed. The item of interest on mesne profits reported by the auditor in favor of the complainants is disallowed." It was also ordered that the injunction restraining J. W. Barnaclo from proceeding under the deed of trust to him, and that restraining the complainants from selling, disposing, or incumbering the title to the church property, be dissolved.

From this decree the defendants below have alone appealed, and they assign for error the decree against them for the payment of mesne profits, and the disallowance of the claims of Bouldin, not embraced in his notes.

As to the mesne profits, we think the decree below cannot be sustained. There is no claim for an allowance of this kind in the bill, and the proofs do not show that the appellants, or those whom they represent, derived individually any such pecuniary advantage from the use of the property pending the suit as to make it proper they should be held personally accountable in that way. Bouldin was the founder of the society. He gathered the congregation together. He bought the church lot and superintended the erection of the church building. If money was wanted that could not be got from others, he furnished it himself from his own means, and in the end, as the case shows, while the society had secured a property worth, according to the report of the auditor, a little more than $8,000, there was a debt owing to him of over $3,000. The congregation had

increased under his administration to several hundred members. Afterwards dissensions grew up, and two parties were formed, the complainants representing one and the defendants the other. Each sought to control the property and govern the society. The defendants kept possession, and apparently a part of the time with the approbation of the court, for a writ to put them out was denied when applied for. At last the complainants were successful, and Bouldin and his party were required to submit to their government. The contest all along was not so much for possession of the property as for the control of the church affairs. During the entire controversy the church property has been kept exclusively for church purposes. Every member of the congregation was permitted to worship there if he chose. It is possible that the parties officiating at the religious services and controlling the property may not at all times have been such as the complainants and their adherents wanted, but no person was excluded from the church building for the purposes of worship if he wanted to go in. Under these circumstances it seems to us that the defendants are not in equity chargeable personally with the value of the use and occupation of the property during the time they were litigating to keep the control of the society and its affairs.

In other respects the decree below is right, so far as it goes. Upon the evidence, Bouldin is not entitled to any further credits than have been allowed. He voluntarily withdrew or withheld his notes from the auditor and the court, and cannot have any affirmative relief on their account. His rights under the Barnaclo deed of trust are saved by the decree, and as the persons who executed the Callan deed were not lawful trustees, all proceedings under that deed were properly enjoined. We think, however, some order should have been made giving the complainants the benefit of the finding in their favor by the auditor in respect to the moneys paid to or collected by Bouldin to apply on his notes. From the answer of Bouldin, it seems probable that a part of these payments have already been indorsed on the notes; but this cannot be determined with certainty without an inspection of the notes themselves. If he will produce the notes, or satisfactorily account for their absence, so that the proper application of all payments can be

made under the direction of the court and the notes discharged to the extent of the application, that should be done. But if, on an order to that effect, he shall fail to produce the notes, or fail satisfactorily to account for their absence, a decree should be entered against him personally for the several amounts reported by the auditor as having been paid to or collected by him on that account. As this last proceeding has been rendered necessary by his failure to produce the notes on the former hearing, he should be charged with the costs consequent upon such refusal.

The decree will be reversed so far as it charges the appellants with any sum for mesne profits and use and occupation, and the cause remanded for such further proceedings in conformity with this opinion as may appear to be necessary; and it is

So ordered.

BLAKE v. McKIM.

41 f. 451

103 336
L-ed 563
48f 668

A., a citizen of Massachusetts, commenced a suit, in a court of that State, against the executors of B., two of whom were citizens of Massachusetts and one a citizen of New York, to enforce a liability of the testator. The executors appeared and filed a joint answer. *Held*, that the controversy, not being divisible, nor wholly between citizens of different States, could not be removed into the Circuit Court of the United States.

ERROR to the Circuit Court of the United States for the District of Massachusetts.

The facts are stated in the opinion of the court.

Mr. Joshua D. Ball for the plaintiffs in error.

Mr. James C. Davis, contra.

MR. JUSTICE HARLAN delivered the opinion of the court.

This action was commenced in one of the courts of Massachusetts, by a citizen of Massachusetts for the use of citizens of that State, against the executors of George Baty Blake, two of whom are citizens of Massachusetts and one a citizen of New York. It is upon a probate bond, executed by James M. Howe, as trustee under the will of Henry Todd, with two sureties, one

of whom was the testator of the defendants. Its object is to recover from the estate of the deceased surety the sum of $50,000 for alleged breaches, upon the part of the trustee, of the bond sued on.

The executors filed a joint answer, which presented a common defence, and subsequently, in proper time, filed their joint petition for the removal of the case into the Circuit Court of the United States for the District of Massachusetts. The petition was dismissed by the State court. The transcript of the record was, nevertheless, filed in the Circuit Court. By the latter court the case, upon motion of plaintiff, was remanded to the State court. From that order this writ of error is prosecuted

We are of opinion that the case, as made by the plaintiffs, is not one of which the Circuit Court of the United States can take jurisdiction.

In *Removal Cases* (100 U. S. 457) we had occasion to construe the first clause of the second section of the act of March 3, 1875, c. 137, which declares that either party may remove to the Circuit Court for the proper district any suit of a civil nature, at law or in equity, pending in a State court, where the matter in dispute exceeds, exclusive of costs, the sum or value of $500, and in which there is "a controversy between citizens of different States." We held it to mean "that when the controversy, about which a suit in the State court is brought, is between citizens of one or more States on one side, and citizens of other States on the other side, either party in the controversy may remove the suit to the Circuit Court, without regard to the position they occupy in the pleadings as plaintiffs or defendants;" that, upon arranging the parties on opposite sides of the real and substantial dispute, if it appears that those on one side are all citizens of different States from those on the other, the suit may be removed, — all those on the side desiring a removal uniting in the application therefor. In that case an Iowa corporation represented one side of the dispute, while the other was represented by citizens of Ohio and Pennsylvania. The controversy was as broad as the suit.

In *Barney* v. *Latham* (*supra*, p. 205) we held, construing the second clause of that section, that one or more of the plaintiffs or defendants, actually interested in a controversy wholly

between citizens of different States, and which can be fully determined as between them, can remove from the State court the entire suit of which that separable controversy forms a part, provided it involves the amount prescribed as necessary to Federal jurisdiction.

The executors of Blake — each of them having qualified and acted in the execution of the trust — were all indispensable parties to the suit. Gould, Pleadings, sect. 73, c. 4; Dicey, Parties to Actions, 322; 1 Chitty, Pl. 52. They all appeared and submitted to the jurisdiction of the court. The present case is, therefore, one in which the suit embraces only one indivisible controversy. It is not wholly between citizens of different States, and fully determinable as between them, because some of the defendants are citizens of the same State with the plaintiffs.

The contention upon the part of counsel for the executors is, that the suit is removable upon their joint petition, under the first clause of that section. We are unable to concur in that view. There is, undoubtedly, some ground for such a construction, but we are not satisfied that Congress intended to enlarge the jurisdiction of the circuit courts to the extent which that construction would imply. The principal reason assigned in its support is, that the clause follows the words of the Constitution, when giving jurisdiction to the Circuit Court of a suit in which there shall be "a controversy between citizens of different States," — language which, it is claimed, does not necessarily require that such controversy must be wholly between citizens of different States. But that consideration was pressed upon our attention in the *Case of the Sewing Machine Companies* (18 Wall. 553), which arose under the act of March 2, 1867, c. 196. 14 Stat. 558. That act authorizes the removal of a suit involving the requisite amount, "in which there is a controversy between a citizen of the State in which the suit is brought, and a citizen of another State," upon an affidavit by the latter, whether plaintiff or defendant, showing that he has reason to believe, and does believe, that, from prejudice or local influence, he would not be able to obtain justice in the State court. The argument there, by counsel of recognized learning and ability, was that a controversy between citizens of

different States is none the less a controversy between citizens of different States because others are also parties to it; that to confine the Federal jurisdiction to cases, wherein the controversy is between citizens of different States exclusively, is to interpolate into the Constitution a word not placed there by those who ordained it, and materially limiting or controlling its express provisions. We declined to adopt that construction, and held that Congress did not intend by the act to confer the right of removal where a citizen of a State, other than that in which the suit is brought, is united, as plaintiff or defendant in the controversy, with one who is a citizen of the latter State. The construction for which counsel for the plaintiffs in error here contend cannot well be maintained without overruling the principles announced in that case.

It is to be presumed that Congress, in enacting the statute of 1875, had in view as well the previous enactments, regulating the removal of causes from the State courts, as the decisions of this court upon them. If it was thereby intended to invest the circuit courts with jurisdiction of all controversies between citizens of different States, although others might be indispensable parties thereto, such intention would have been expressed in more explicit language. We are not disposed to enlarge that jurisdiction by mere construction. We are of opinion that Congress, in determining the jurisdiction of the circuit courts over controversies between citizens of different States, has not distinctly provided for the removal from a State court of a suit in which there is a controversy not wholly between citizens of different States, and to the full or final determination of which one of the indispensable parties, plaintiffs or defendants, on the side seeking the removal, is a citizen of the same State with one or more of the plaintiffs or defendants against whom the removal is asked.

The judgment of the Circuit Court remanding the cause to the State court will, therefore, be affirmed, and it is

So ordered.

WEITZEL v. RABE.

While a distillery, the capacity of which was estimated at 416.90 bushels of grain each twenty-four hours, was in full operation, A., the owner thereof, made application, under sect. 3311, Rev. Stat., to have the capacity reduced to 207.45 bushels, by closing six tubs. According to the practice prevailing in that collection district, two tubs were closed a day, commencing May 2, 1876. On May 2 and 3 A. mashed 207.45 bushels, but distilled beer from 415.96 bushels, which he had mashed April 30 and May 1. Thereafter he used 207.45 bushels daily. All the spirits produced by him during May were reported by him, and the tax thereon duly paid. *Held*, 1. That the producing capacity of the distillery was not in law reduced to 207.45 bushels per day until May 4. 2. That for the beer distilled from the 415.96 bushels of grain mashed April 30 and May 1 A. was not liable to be taxed as for material used by him in excess of the producing capacity of his distillery on May 2 and 3.

ERROR to the Circuit Court of the United States for the Southern District of Ohio.

This was an action brought by Rabe against Weitzel, collector of internal revenue for the first collection district of Ohio. He alleges that on the sixteenth day of August, 1876, the Commissioner of Internal Revenue illegally and wrongfully assessed against him as distiller, engaged in the business of distilling in that district, an internal revenue tax of $754.63, as upon the product in spirits of an alleged excess of material used for the production of spirits over and above the producing capacity of his distillery, in the month of May, 1876, and caused the same to be forwarded and delivered to Weitzel for collection; that it is not true that there existed any such excess of material used over the actual and lawful producing capacity of his distillery; that he protested against the assessment to Weitzel, who, under authority of his office, demanded the tax, which the plaintiff, to avoid distraint and seizure of his property, paid, under protest, on the 25th of April, 1877; and that on the 29th of May, 1877, he made his application to the Commissioner to refund and repay to him the sum so paid, which was rejected.

The plaintiff demanded judgment for that amount.

The defendant, in his answer, traversed the allegation of the

plaintiff's petition that the assessment was oppressive and wrongful. There was a judgment for the plaintiff, and the defendant sued out this writ.

It appears that previous to May 2, 1876, the capacity of the distillery was fixed by the survey at 415.96 bushels of grain each twenty-four hours, the fermenting period being forty-eight hours; that on that day the plaintiff went to the collector's office and notified the deputy in charge of distilleries that he desired to reduce the capacity to 207.45 bushels by closing six fermenting tubs then in use; that he then signed three blank notices given him by said deputy, leaving them with said deputy, who filled up and filed the same. The notices when filed stated that he desired to reduce his capacity from 415.96 to 346.29 bushels by closing tubs Nos. 3 and 8, having a capacity of 9,406 gallons, on and after May 2, 1876; from 346.29 to 276.03 bushels, by closing tubs Nos. 12 and 15, capacity 9,485 gallons, on and after May 3; and from 276.03 to 207.45 bushels, by closing tubs Nos. 10 and 14, capacity 9,258 gallons, on and after May 4, 1876. The deputy thereupon closed and sealed the six tubs successively on the second, third, and fourth days of that month, in accordance with the notices.

On the 2d and 3d of May the plaintiff mashed but 207.45 bushels of grain, but distilled the beer from 415.96 bushels of grain mashed upon the 30th of April and 1st of May; on each remaining day of the month he used the exact amount of grain fixed by the capacity. On the receipt of his return, the Commissioner of Internal Revenue made an assessment against him for an excess of grain used during the second and third days of the month of May over and above the reduced capacity specified in the notices; to wit, in excess of 346.29 bushels on the second, and 276.03 bushels on the third. This assessment was paid to the defendant as collector of internal revenue.

The mode of reducing capacity by giving three notices and closing tubs on successive days after they had remained empty twenty-four hours was the uniform practice in that collection district, until changed in accordance with circular No. 38, from the Commissioner of Internal Revenue, dated Feb. 20, 1877, and the distiller desiring to reduce capacity was required by the collector to give the three notices.

The plaintiff reported all spirits produced by him during May, 1876, and paid tax thereon according to law.

The court charged the jury that the producing capacity of the distillery was not in law reduced until the fourth day of May; that it continued for the second and third days of May to be 415.96 bushels, and this being the amount of grain in fact used, there was no use of grain by the distiller in excess of the capacity of his distillery; and that the assessment was therefore illegal.

The defendant asked the court to instruct as follows: —

When the distiller gave notice in the form prescribed that he desired to reduce capacity on and after a day specified in the notice by closing a designated fermenting tub, and such tub was thereupon closed by the deputy collector in accordance with the notice, the legal effect was to reduce the capacity of the distillery on and after that day; and if the distiller on or after that day used grain in excess of the reduced capacity, although mashed before the reduction, the Commissioner was authorized by law to make an assessment for the excess, and the distiller who pays it cannot recover it from the collector.

Which charge was refused. To the charge as given and to that refused the defendant excepted, and he assigns for error the action of the court in that regard.

Mr. Assistant Attorney-General Smith for the plaintiff in error.

No counsel appeared for the defendant in error.

MR. CHIEF JUSTICE WAITE delivered the opinion of the court.

We think the court below was right in holding that the producing capacity of the distillery was not in law reduced so as to make the distiller liable for material used in excess of the reduced capacity, until May 4. The original capacity, as estimated according to law, was 416.90 bushels of grain each twenty-four hours, but the spirits could not be properly developed and separated until the expiration of forty-eight hours from the time the grain was put into the mash, — that being the fermenting period allowed. According to the rulings of

the Commissioner of Internal Revenue, grain has been *used* when the spirits have been properly developed and separated by distillation; and in determining, under the requirements of sect. 3309 of the Revised Statutes, whether a distiller has accounted for all grain used by him in a month, the practice has been to take the quantity of mash and beer on hand at the beginning of the month, add to it the quantity put into mash during the month, and from the total deduct the quantity of mash and beer on hand at the end of the month. The remainder is the quantity used. Under the law the distiller must pay a tax equal to eighty per cent of his estimated producing capacity, whether the spirits are actually produced or not. Consequently, to save himself from taxation beyond his actual production, he must keep his distillery running all the time within twenty per cent of its full capacity.

The application in this case, under sect. 3311 of the Revised Statutes, for a reduction of capacity, was made when the distillery was in full operation, and when mash or beer equal to the full producing capacity was in the process of distillation. The spirits could not be properly developed and separated from this material until the expiration of forty-eight hours from that time. This both the government officers and the distiller knew. Under these circumstances, the application for the reduction of capacity was evidently made with the intention of having the reduced capacity date from the time when it could go into effect without subjecting the distiller to a tax on excess of material used, by reason of the further distillation of what was then in mash. To accomplish this purpose a practice had grown up in the collection district where this distillery was situated to give three notices and close tubs on successive days after they had remained empty twenty-four hours. Forms seem to have been prepared by the revenue officers for such notices; and when the application for reduction was made in this case, the notices were signed in blank and left with the collector to be filled up by him in a way that would, according to the practice which prevailed, bring about the reduction at the proper time. The reduction was made. The distiller reported his actual product, and paid the taxes thereon in full. The amount now sued for was evidently paid on account of a constructive

and not an actual use of material in excess of capacity. There is no pretence of bad faith. The distiller did what was required of him to get a reduction of capacity while his distillery was in operation. Under such circumstances he was entitled to have the capacity estimated while the reduction was going on, in such a way as not to charge him with material in mash when the change was applied for, as material used in excess of capacity.

Judgment affirmed.

NOTE. — In *Weitzel* v. *Kayser* and *Weitzel* v. *Caldwell*, error to the same court and submitted at the same time as the preceding case, MR. CHIEF JUSTICE WAITE remarked that they were in all material respects like it, and, upon its authority, the judgments were affirmed.

WEBBER v. VIRGINIA.

B5/12/
103 344
Led 565
51 786

1. Letters-patent granted by the United States do not exclude from the operation of the tax or license law of a State the tangible property in which the invention or discovery is embodied.
2. A statute of Virginia requires that the agent for the sale of articles manufactured in other States must first obtain a license, for which he is required to pay a specific tax for each county in which he sells or offers to sell them, while the agent for the sale of articles manufactured in that State, if acting for the manufacturer, is not required to obtain a license or pay any license tax. *Held*, that the statute is in conflict with the commerce clause of the Constitution of the United States, and void.
3. Commerce among the States is not free whenever a commodity is, by reason of its foreign growth or manufacture, subjected by State legislation to discriminating regulations or burdens.
4. *Welton* v. *State of Missouri* (91 U. S. 275) and *County of Mobile* v. *Kimball* (102 id. 691) cited and approved.

ERROR to the Supreme Court of Appeals for the State of Virginia.

This case comes before this court on a writ of error to the Supreme Court of Appeals of the State of Virginia, and arose in this way: In May, 1880, the plaintiff in error, J. T. Webber, was indicted in the County Court of Henrico County, in that State, for unlawfully selling and offering for sale in that

county, to its citizens, certain machines known as Singer sewing-machines, which were manufactured out of the State, without having first obtained a license for that purpose from the authorities of the county, or having paid the tax imposed by law for that privilege.

The indictment was founded upon the forty-fifth and forty-sixth sections of the revenue law of the State, which are as follows: —

"45. Any person who shall sell, or offer for sale, the manufactured articles or machines of other States or Territories, unless he be the owner thereof and taxed as a merchant, or take orders therefor, on commission or otherwise, shall be deemed to be an agent for the sale of manufactured articles of other States and Territories, and shall not act as such without taking out a license therefor. No such person shall, under his license as such, sell or offer to sell such articles through the agency of another; but a separate license shall be required from any agent or employé who may sell or offer to sell such articles for another. For any violation of this section, the person offending shall pay a fine of not less than fifty dollars nor more than one hundred dollars for each offence.

"46. The specific license tax upon an agent for the sale of any manufactured article or machine of other States or Territories shall be twenty-five dollars; and this tax shall give to any party licensed under this section the right to sell the same within the county or corporation in which he shall take out his license; and if he shall sell or offer to sell the same in any other of the counties or corporations of this State, he shall pay an additional tax of ten dollars in each of the counties or corporations where he may sell or offer to sell the same. All persons other than resident manufacturers or their agents, selling articles manufactured in this State, shall pay the specific license tax imposed by this section." Acts of Assembly 1875 and 1876, p. 184, c. 162, sects. 45, 46.

To the indictment the accused pleaded "not guilty;" and on the trial it was proved that he had sold and offered to sell sewing-machines in Henrico County, as charged, but that at the time he was acting as agent or employé of the Singer Manufacturing Company, a corporation created under the laws of New Jersey; that this company had a place of business in Richmond, Va., where it was licensed as a resident mer-

chant, for the year beginning May 1, 1880, and had paid the required license tax, and where it kept a stock of machines for sale; that the machines sold by the accused were the property of the company, and were manufactured by it out of the State, and in accordance with specifications of a patent of the United States, granted in 1879, to one W. C. Hicks, and by him transferred to the company. It also appeared that the accused had not taken out a license to sell the machines in Henrico County, and was not himself taxed as a merchant, and had not taken orders for the machines on commission or otherwise.

On the trial his counsel requested the court to instruct the jury, that if they believed the Singer Manufacturing Company had paid for a general merchant's license for the year beginning May 1, 1880, and received such license, or that the machines sold were constructed according to the specifications of the patent held by the company, and that the accused was acting in the sales made only as its employé, he was entitled to a verdict of acquittal. The court refused to give these instructions, and, at the request of the attorney for the Commonwealth, instructed the jury, in substance, that if they believed the accused had, at different times within the year, previous to the indictment, sold or offered to sell in Henrico County to its citizens Singer sewing-machines manufactured beyond the State, and at the time he was neither the manufacturer himself nor the owner of them, and was not taxed as a merchant in the county, and had not taken orders therefor on commission or otherwise, and had not obtained a license to sell the same in the county, and had not paid to the proper officer the tax imposed by law for selling the same in that county, they should find him guilty.

The jury found the accused guilty, and he was sentenced to pay a fine of fifty dollars and costs. On appeal to the Circuit Court of the county this judgment was affirmed, and on further appeal to the Supreme Court of Appeals of the State the judgment of the Circuit Court was affirmed. To review the latter judgment the case is brought here on writ of error.

Mr. C. V. Meredith for the plaintiff in error.

Mr. James G. Field, Attorney-General of Virginia, *contra.*

MR. JUSTICE FIELD, after stating the case, delivered the opinion of the court.

In the county court where the accused was tried, the only defence presented by his instructions was, that he was acting as the agent of the Singer Manufacturing Company, which had a license from the State as a resident merchant in Richmond to sell the machines, and also held a patent of the United States, authorizing it to manufacture and sell them anywhere in the United States. To this defence the answer is obvious. The license, being limited to the city of Richmond, gave no authority to the company to sell the machines elsewhere, and of course gave none to its agent. Besides, the question as to the extent of the territorial operation of the license depended upon the construction given by the Court of Appeals of the State to the statute, and its decision thereon is not open to review by us. And the right conferred by the patent laws of the United States to inventors to sell their inventions and discoveries does not take the tangible property, in which the invention or discovery may be exhibited or carried into effect, from the operation of the tax and license laws of the State. The combination of different materials so as to produce a new and valuable product or result, or to produce a well-known product or result more rapidly or better than before, which constitutes the invention or discovery, cannot be forbidden by the State, nor can the sale of the article or machine produced be restricted except as the production and sale of other articles, for the manufacture of which no invention or discovery is patented or claimed, may be forbidden or restricted.

The patent for a dynamite powder does not prevent the State from prescribing the conditions of its manufacture, storage, and sale, so as to protect the community from the danger of explosion. A patent for the manufacture and sale of a deadly poison does not lessen the right of the State to control its handling and use. The legislation respecting the articles which the State may adopt after the patents have expired, it may equally adopt during their continuance. It is only the right to the invention or discovery — the incorporeal right — which the State cannot interfere with. Congress never intended that the patent laws should displace the police powers

of the States, meaning by that term those powers by which the health, good order, peace, and general welfare of the community are promoted. Whatever rights are secured to inventors must be enjoyed in subordination to this general authority of the State over all property within its limits.

These views find support in the language of this court in *Patterson* v. *Kentucky*, 97 U. S. 501. There a party was convicted of violating a statute of the State regulating the inspection and gauging of oils and fluids, the product of coal, petroleum, or other bituminous substances. The statute provided that such oils and fluids should be inspected by an authorized officer of the State before being used, sold, or offered for sale, and required the inspector to brand, according to the fact, casks and barrels of the oil with the words "standard oil," or with the words "unsafe for illuminating purposes." It imposed a penalty for selling or offering for sale in the State such oils and fluids as had been condemned. A particular oil, known as the Aurora oil, which had been thus condemned, was sold by the accused. A patent for the oil had been issued by the United States to a party who had assigned it to him, and in defence to the indictment he asserted the right under the patent to sell the oil in any part of the United States, and that no State could, consistently with the Federal Constitution and the laws of Congress, prevent or obstruct its exercise. But the court held this construction of the Constitution and laws to be inadmissible, and that the right was to be exercised in subordination to the general powers which the several States possessed over their purely domestic affairs, whether of internal commerce or police. After some just observations upon the police powers of the State, their extent and object, and a reference to previous decisions, the court said, speaking through Mr. Justice Harlan: "These considerations, gathered from the former decisions of this court, would seem to justify the conclusion that the right which the patentee or his assignee possesses in the property created by the application of a patented discovery, must be enjoyed subject to the complete and salutary power, with which the States have never parted, of so defining and regulating the sale and use of property within their respective limits as to afford protection to the many against the injurious

conduct of the few. The right of property in the physical substance, which is the fruit of the discovery, is altogether distinct from the right in the discovery itself, just as the property in the instruments or plates by which copies of a map are multiplied is distinct from the copyright of the map itself." And again, the enjoyment of the right in the discovery "may be secured and protected by national authority against all interference; but the use of the tangible property which comes into existence by the application of the discovery is not beyond the control of State legislation simply because the patentee acquires a monopoly in his discovery."

In accordance with the views thus expressed we can find no objection to the legislation of Virginia in requiring a license for the sale of the sewing-machines, by reason of the grant of letters-patent for the invention.

There is, however, an objection to its legislation arising from its discriminating provisions against non-resident merchants and their agents, and this is presented by the instructions given to the jury at the request of the attorney of the Commonwealth.

The forty-fifth section of the revenue law declares that "any person who shall sell or offer for sale the manufactured articles or machines of other States or Territories, unless he be the owner thereof and taxed as a merchant, or take orders therefor, on commission or otherwise, shall be deemed to be an agent" for the sale of those articles, and shall not act as such without taking out a license therefor. A violation of this provision subjects the offender to a fine of not less than fifty dollars nor more than one hundred dollars for each offence.

The forty-sixth section fixes the license tax of the agent for the sale of such articles at twenty-five dollars. The license only gives him a right to sell in the county or corporation for which it is issued. If he sells, or offers to sell, in other counties or corporations, he must pay in each an additional tax of ten dollars. The section then declares that "all persons, other than resident manufacturers or their agents, selling articles manufactured in the State shall pay the specific license tax imposed by this section."

By these sections, read together, we have this result: the agent for the sale of articles manufactured in other States must first obtain a license to sell, for which he is required to pay a specific tax for each county in which he sells or offers to sell them; while the agent for the sale of articles manufactured in the State, if acting for the manufacturer, is not required to obtain a license or pay any license tax. Here there is a clear discrimination in favor of home manufacturers and against the manufacturers of other States. Sales by manufacturers are chiefly effected through agents. A tax upon their agents when thus engaged is, therefore, a tax upon them, and if this is made to depend upon the foreign character of the articles, that is, upon their having been manufactured without the State, it is to that extent a regulation of commerce in the articles between the States. It matters not whether the tax be laid directly upon the articles sold or in the form of licenses for their sale. If by reason of their foreign character the State can impose a tax upon them or upon the person through whom the sales are effected, the amount of the tax will be a matter resting in her discretion. She may place the tax at so high a figure as to exclude the introduction of the foreign article and prevent competition with the home product. It was against legislation of this discriminating kind that the framers of the Constitution intended to guard when they vested in Congress the power to regulate commerce among the several States.

In *Welton* v. *State of Missouri* we expressed at length our views on the subject, and to our opinion we may refer for their statement. No one questions the general power of the State to require licenses for the various pursuits and occupations conducted within her limits, and to fix their amount as she may choose, and no one on this bench — certainly not the writer of this opinion — would wish to limit or qualify it in any respect, except when its exercise may impinge upon the just authority of the Federal government under the Constitution, or the limitations prescribed by that instrument. But where a power is vested exclusively in that government, and its exercise is essential to the perfect freedom of commercial intercourse between the several States, any interfering action

by them must give way. This was stipulated in the indissoluble covenant by which we became one people.

In a recent case we had occasion to consider at some length the extent of the commercial power vested in Congress, and how far it is to be deemed exclusive of State authority. Referring to the great variety of subjects upon which Congress, under that power, can act, we said that "some of them are national in their character, and admit and require uniformity of regulation, affecting alike all the States; others are local, or are mere aids to commerce, and can only be properly regulated by provisions adapted to their special circumstances and localities. Of the former class may be mentioned all that portion of commerce with foreign countries or between the States which consists in the transportation, purchase, sale, and exchange of commodities. Here there can, of necessity, be only one system or plan of regulations, and that Congress alone can prescribe. Its non-action in such cases, with respect to any particular commodity or mode of transportation, is a declaration of its purpose that the commerce in that commodity or by that means of transportation shall be free. There would otherwise be no security against conflicting regulations of different States, each discriminating in favor of its own products and citizens and against the products and citizens of other States." *County of Mobile* v. *Kimball*, 102 U. S. 691, 697.

Commerce among the States in any commodity can only be free when the commodity is exempted from all discriminating regulations and burdens imposed by local authority by reason of its foreign growth or manufacture.

The judgment of the Supreme Court of Appeals of Virginia must, therefore, be reversed, and the cause remanded to it for further proceedings in accordance with this opinion; and it is

So ordered.

41 f- 367

INSURANCE COMPANY v. KIGER.

1. Where a factor has against his consignor no interest in the consigned property, he cannot pledge it for his own debt. Such a pledge, although accompanied by a warehouse receipt setting forth that the property is deliverable to the pledgee, is, under the laws of Louisiana, invalid, and confers upon him no title adverse to that of the consignor.
2. In such a case, the obligation imposed by those laws upon the warehouseman is discharged by his surrender of the property pursuant to judicial process sued out by such consignor, notice of which he gave to the pledgee.
3. A warehouseman is not a guarantor of the title of property placed in his custody, although his receipts therefor are by statute negotiable.

ERROR to the Circuit Court of the United States for the District of Louisiana.

On the 11th of March, 1876, the General Assembly of Louisiana passed an act, No. 72, entitled "An Act governing the manner in which cotton-press receipts, warehouse receipts, or the receipts of other custodians of any property whatever, shall be issued, in all cases where such receipts shall or may be used or pledged as collateral security for money advanced or borrowed on faith of the property therein specified, and governing the delivery and disposal of the property for which such receipts may be issued." The sections important to this case are as follows: —

"SECT. 1. Be it enacted, &c., that no cotton-press, or other custodian or custodians of produce or property, shall issue any receipt, or other voucher, for any produce, merchandise, or other property, to any person or persons purporting to be the holder, owner, or owners thereof, unless such produce, merchandise, or other property shall have been actually received into store, or upon the premises of such cotton-press, or other custodian or custodians, shall be in the store, cotton-press, or warehouse, or on the premises aforesaid, or under his or their control at the time of issuing such receipt.

"SECT. 2. That any person, firm, or association who shall or may be, or in any way become the custodians of any property, goods, products, or merchandise whatever, and who may issue receipts therefor, shall not, under any circumstances, or upon any order or guarantee whatever, deliver property for which such receipts have

been issued, until the party or parties to whom the receipts were issued, or the legal holders thereof, shall have surrendered the same to said custodians for cancellation, and in default of a strict compliance with the provisions of this section of this act, they may be held liable by the legal holder or owner of their receipt, for the market value of the property therein described, as may be established by the chamber of commerce of the city of New Orleans, or any committee thereof, approved and authenticated by the president or vice-president of said chamber of commerce. All warehouse receipts, intended for pledge, under the provisions of this act, shall be paraphed, before being issued, as follows: 'for hypothecation in accordance with the provisions of this act.'"

"SECT. 4. That parties who may borrow money on the faith of warehouse receipts, representing property in store, shall file their affidavit with the pledgees that such property is theirs, the pledgers', personal property, or that it is the property of some party for whom the pledger is acting as agent, factor, commission merchant, or in any other fiduciary capacity, and that said party is justly and truly indebted to the pledger in an amount equal in value to the value of the property pledged, as specified in the warehouse receipts, for moneys paid to him, or paid by his order, and for his account, by the party or consignee making the pledge. The cashier of a bank, or the secretary of any insurance company, incorporated or working under any law in the United States, or of this State, is hereby authorized to administer the oath contemplated under the provisions of this act. Any deviation therefrom shall render the party or parties so deviating liable for the value of the property, or any excess in value, over and above the amount for which it may have been pledged, in any manner specified in section one of this act, and to prosecution for perjury, and also to obtaining money under false pretences.

"SECT. 5. That the vendor's lien of five days' privilege, now allowed in commercial transactions, for the payment of the purchase price, shall not be affected by the provisions of this act, except in case in which a warehouse receipt has been pledged as collateral for money borrowed. The holder of the warehouse receipt shall be considered and held as the actual owner of the property described in the receipt, and no clause in this act shall operate to the detriment or injury of the holder of a warehouse receipt, to the extent of the value of the property specified, made, and issued in accordance with, and under the provisions of this act: *Provided*, that where the factor, agent, or pledger may have wrongfully pledged, in

violation of this act, any property, the lien of the owner shall be valid, even against the third holder of the warehouse receipt."

"SECT. 8. That all warehouse receipts, as by this act provided, shall be negotiable by indorsement in blank, or by special indorsement, in the same manner and to the same extent as bills of exchange and promissory notes now are."

On the 19th of March, 1877, Basil G. Kiger, a planter in Mississippi, consigned to Aiken & Watt, his factors in New Orleans, one hundred and ninety-six bales of cotton, with instructions not to sell, but to hold for further directions and better prices. The cotton reached New Orleans March 21, and was stored by Aiken & Watt in the cotton-press of Sam. Boyd & Co. Aiken & Watt had no pecuniary interest whatever in the cotton, and Kiger, the consignor, was not indebted to them. On the contrary, they were largely indebted to him. On the 26th of March, Aiken & Watt borrowed of the Mechanics' and Traders' Insurance Company $4,500, for which they gave their notes to the company, payable in forty days, at eight per cent interest, secured by a cotton-press receipt of Boyd & Co., of which the following is a copy: —

"NEW ORLEANS, March 26, 1877.

"Received from Aiken & Watt the following-described property, to wit: one hundred bales cotton, marked < K >, ex. Pargoud, March 21, 1877. Shipper's press. (Printed indorsement in the body of the receipt:) 'The within cotton will not be delivered except on the return of this receipt to the press, properly indorsed.' Deliverable to the Mechanics' and Traders' Insurance Co. or order.

"SAM. BOYD & Co."

Indorsement on the back of the receipt printed: —

"Deliver to or order the within-described property. The above order is accepted, and the property is transferred to —

"SAM. BOYD & Co."

Afterwards, on the 3d of April, Aiken & Watt borrowed $2,500 more from the company, and gave a similar press receipt for ninety-six bales as security. The cotton embraced in these receipts was that which belonged to Kiger.

Before the maturity of these notes Aiken & Watt failed.

The notes were protested for non-payment when due, and the makers were adjudicated bankrupts June 16, 1877.

On the 18th of April, 1877, Kiger brought this suit against Boyd & Co., to recover the possession of his cotton. It was delivered to him under the writ which was issued, he giving bond according to law to return it in case of judgment against him to that effect. Afterwards the insurance company was called into the suit by Boyd & Co., and made a defendant by Kiger. The insurance company answered, setting up its claim to the property. Upon the trial, the foregoing facts appearing, the jury were instructed to return a verdict in his favor against the company.

To reverse the judgment rendered on that verdict, the case is now here by writ of error.

Mr. Thomas Hunton for the plaintiff in error.

Mr. Joseph P. Hornor, *Mr. W. S. Benedict*, and *Mr. Thomas J. Semmes*, *contra*.

MR. CHIEF JUSTICE WAITE, after stating the facts, delivered the opinion of the court.

There are two questions in this case: 1, whether the insurance company can hold the cotton as against Kiger; and, 2, whether, if it cannot, Boyd & Co. are liable for the amount for which their receipts were pledged.

1. As to Kiger. Before the act of 1876 it was settled by numerous decisions in Louisiana that a factor could not pledge for his own debts the property of his principal. *Stetson* v. *Gurney*, 17 La. 166; *Hadwin* v. *Fisk*, 1 La. Ann. 43–74; *Miller* v. *Schneider & Zuberbier*, 19 id. 300; *Young* v. *Scott & Cage and Cavaroc*, 25 id. 313. The act of 1876 does not, as it seems to us, materially enlarge this power, so far as the facts of this case are concerned. It makes warehouse receipts the representatives of property in store, and provides for their use to borrow money on; but the implication is clear that their use in that way by a factor for more than the value of his interest in the property would be wrongful and invalid against the owner. This we do not understand to be disputed by the counsel for the plaintiff in error. His claim is that there was in this case no pledge, but, "as the effect of the stipulation in the press

receipts," "an absolute transfer of the legal title to the insurance company by parties in possession having the absolute control of the property, and the security was thus taken to enable the insurance company to sell the cotton and reimburse themselves if the debt was not paid." The transaction between the parties was certainly not a sale, and in the answer of the company it is distinctly stated that the cotton was delivered into the possession of the company to be held as security for the payment of the notes given for the money borrowed. Undoubtedly the possession of the receipts was equivalent to the possession of the property, but the title which the company acquired was such as grew out of its contract with the factors. That clearly was a pledge and nothing more. There was, first, the cotton; second, the debt for the money borrowed; and, third, the delivery of the property into the possession of the creditor, to be held as security for the debt. These are all the elements of a pledge, and fix the rights of the parties. Aiken & Watt were the pledgors, but as they were only factors and had no interest in the property as against Kiger, the owner, their pledge was wrongful and invalid as to him. The pledge was by a factor of the property of his principal, in which he had no interest whatever, as security for his own debt.

2. As to Boyd & Co. They were simply warehousemen. Their duty under the law was not to issue receipts until they had the property actually in store, and not to deliver the property until the receipts were surrendered for cancellation. They did have the property in store when they gave the receipts, and as soon as it was taken from them by judicial process they notified the insurance company, and upon that notice the company is now here asserting its title. This is a substantial compliance with their obligation not to deliver without a surrender of the receipts. There is no pretence of fraud or collusion, and we think it would be a surprise to warehousemen to be told, that when they issued their receipts for property in store they became not only responsible as custodians of the property, but guarantors of its title to the assignees of their receipts. Such a rule would make it necessary for a warehouseman, before giving a receipt, not only to ascertain whether he had the property actually in store, but whether the title of the

bailor was valid and unincumbered. Certainly this could not have been in contemplation when warehouse receipts were made by statute negotiable and to some extent evidence of ownership. The duty of the warehouseman is performed when he gets the property into his own possession before he issues the receipt, and transfers that possession when demanded to the lawful holder of the receipt.

In this case the liability of Boyd & Co. is just what it would have been if the company had put the cotton in store and taken a receipt to its own order. The fact that Aiken & Watt originally stored the property is a matter of no importance so far as Boyd & Co. are concerned. The receipt in the hands of the company represented the cotton stored by Aiken & Watt, and gave the company the same rights it would have had if the cotton, instead of the receipt, had been handed over. The company got by the receipt such interest in the cotton as Aiken & Watt could by their pledge convey, and that is all Boyd & Co. agreed to deliver on the return of their receipt. Boyd & Co. cannot, as against the company, say they never had the cotton, or that they did not promise to deliver it on the return of their receipt by the lawful holder. They received the actual possession of the property from Aiken & Watt, and that possession they agreed to deliver to the insurance company when called on. This, as has just been seen, they have in legal effect done, and the rights of the parties in this case are to be determined precisely as they would be if the company had got the cotton from Boyd & Co., on the surrender of the receipts, and had afterwards been sued by Kiger for its possession.

Judgment affirmed.

WOLFF v. NEW ORLEANS.

1. As long as a city exists, laws are void which withdraw or restrict her taxing power so as to impair the obligation of her contracts made upon a pledge expressly or impliedly given that it shall be exercised for their fulfilment. *Von Hoffman* v. *City of Quincy* (4 Wall. 535) cited on this point, and approved.
2. Although such laws be enacted, *mandamus*, to compel her to exercise that power to the extent she possessed it before their passage, will lie at the suit of a party to such a contract who has no other adequate remedy to enforce it.
3. *Meriwether* v. *Garrett* (102 U. S. 472), distinguished.

ERROR to the Circuit Court of the United States for the District of Louisiana.

Mr. George S. Lacey for the plaintiff.
Mr. Benjamin F. Jonas and *Mr. Henry C. Miller*, *contra.*

MR. JUSTICE FIELD delivered the opinion of the court.

In March, 1876, the relator, Rebecca W. Wolff, recovered a judgment in the Circuit Court of the United States for the District of Louisiana, against the city of New Orleans, for the sum of $13,000. Execution was issued upon it and returned unsatisfied. She thereupon caused the judgment to be registered, under the act of the legislature of the State of 1870, known as Act No. 5, of the extra session of that year, to the provisions of which we shall hereafter refer; and then called upon the mayor and administrators of the city to pay it out of the contingent fund of the corporation, or, if it could not be paid in that way, to levy a special tax for its payment. The authorities having failed to comply with this request, she applied for a *mandamus* to compel them to pay it out of that fund or to levy a tax for that purpose, setting forth in her petition the recovery of the judgment, the issue of execution thereon, its return unsatisfied, and the refusal of the city authorities, as stated. An alternative writ was accordingly issued.

To this writ the city authorities appeared, and filed an answer to the petition, in which they admitted the recovery of the judgment, the issue of the execution, and its return unsatisfied, and set up that the judgment was recovered on bonds of

the city issued to the New Orleans, Jackson, and Great Northern Railroad Company, under the act of the legislature of the State, approved on the 15th of March, 1854; that no tax for the payment of the principal of those bonds was directed to be levied by that act, or any other act of the State; that there was no contingent fund of the city out of which the judgment could be paid; and that there were no moneys to the credit of the fund for current expenses, not otherwise appropriated; and that for these reasons they had not budgeted the judgment or levied a tax for its payment, and could not levy a special tax for that purpose. In an amended answer they further set up that at the time the bonds, upon which the judgment was recovered, were issued, a general statute of the State prohibited municipal corporations from incurring any debt or liability unless in the ordinance creating the same full provision was made for the payment of the principal and interest; and that a special statute prescribing the form of the ordinance by which a particular debt could be created, declared that such ordinance should be submitted to the legal voters of the corporation, and that the assent of the majority of them should be a condition of its validity; that the ordinance thus submitted providing for the issue of the bonds contained no provision for levying a tax to pay the principal of them, but contained another provision deemed ample for that purpose; and that, therefore, it was the evident intention of the legislature that the principal debt should be thus paid and not by means of taxation.

The relator demurred to the return of the respondents, but it would seem that when the demurrer was called, the case was submitted upon the pleadings and certain proofs which had been filed. The court decreed that the city authorities, exercising the discretion vested in them according to section 3 of Act No. 5, of the extra session of 1870, should appropriate from the money set apart in the budget or annual estimate for contingent expenses a sufficient sum of money to pay the judgment; but that if no appropriation be made by the common council of the city, the judgment should be paid according to its priority of filing and registry in the office of the controller, from the first money in the next annual estimate set apart for that purpose. The decree was accompanied by a provision that

nothing therein should require the common council to assess or levy any tax upon the city for the payment of the judgment, until the legislature of the State should authorize the same, thus assuming that existing legislation did not permit any such tax. To reverse this decree the relator has brought the case to this court.

The act which authorized the issue of the bonds, upon which the relator recovered judgment, provided that the railroad company should issue to the city certificates of stock equal in amount to the bonds received, and declared that the stock should remain "forever pledged for the redemption of said bonds." It made no other provision for the ultimate payment of the principal, but provided that a special tax should be levied each year to pay the annual interest. It is contended that only to the stock thus pledged and the income from it were the bondholders to look for the payment of the principal. The same position was urged in *United States* v. *New Orleans*, on the application by the relator in that case for a *mandamus* to compel the city authorities to levy a tax to pay judgments recovered upon similar bonds, and was adjudged to be untenable. 98 U. S. 381. The court held that the indebtedness of the city was conclusively established by the judgments recovered against it, and that their payment was not restricted to any species of property or revenues, or subject to any conditions. If there were any limitations upon the means by which payment of the bonds was to be had, they should have been insisted upon when the suits were pending, and have been continued in the judgments. The fact that no such limitations were there found was conclusive that none existed.

The court also held that if the question were an open one its conclusion would be the same; that the declaration of the act, that the stock which the city was to receive from the railroad company should remain "forever pledged for the redemption of said bonds," only created a statutory pledge by way of collateral security for their payment, and did not release the city from its primary liability; and that the bondholder was not bound to look to that security, but could proceed directly against the city without regard to it.

The court further held that the statutes of the State restrain-

ing municipal corporations from creating any indebtedness, without providing at the same time for the payment of the principal and interest, were not limitations upon the power of the legislature to authorize the creation of debts by such corporations upon other conditions; and though as a general rule it was deemed expedient to prohibit cities from incurring debts on their own motion, without making provision for their payment, it did not follow that the legislature might not authorize the incurring of a particular obligation without such provision; and, in the instance mentioned, the statute prescribed the details of the ordinance to be passed by the city in execution of the authority conferred.

The views thus expressed dispose of the objections to the *mandamus* in this case, founded upon what is contained in the railroad act as well as what is omitted from it. Nothing new has been presented to our consideration to lead us to doubt the correctness of our conclusions. There is no occasion, therefore, to repeat the reasons upon which they were founded.

But counsel also urge in their argument against the granting of the *mandamus*, that the power of a city to levy a tax upon property for all purposes, judgments included, is limited by acts of the legislature to one dollar and fifty cents on every one hundred dollars of valuation, and that the amount thus raised is insufficient to meet the current expenses of the city and pay previous judgments of other parties. They repeat the averments of the answer, that there was no contingent fund of the city out of which the judgment of the relator could be paid, nor moneys to the credit of the fund for current expenses not otherwise appropriated. They cite the charter of 1870, which requires a budget to be made in December of each year, exhibiting the various items of liability and expenditure for the ensuing year, and the act of March 6, 1876, which limits the right of taxation upon property by the city to one dollar and fifty cents on every one hundred dollars of its assessed value. They also insist that the conditions on which judgments against the city are to be paid are prescribed in Act No. 5 of the extra session of 1870.

This last act provides that no writ of execution or *fieri facias* shall issue from any of the courts of the State to enforce the

payment of any judgment for money against the city of New Orleans; but that such judgment, when the same shall have become executory, shall have the effect of fixing the amount of the plaintiff's demand, and that he may cause a certified copy of it, with his petition and the defendant's answer, and the clerk's certificate that it has become executory, to be filed in the office of the controller of the city, and that thereupon it shall be the duty of the controller or auditing officer to cause the same to be registered and to issue a warrant upon the treasurer or disbursing officer of the corporation for the amount, without any special appropriation of money therefor, "provided always that there be sufficient money in the treasury to pay such judgment, specially designated and set apart for that purpose in the annual budget or detailed statement of items of liability and expenditure required to be made" by sect. 124 of the act of March 20, 1856, amending the city charter, or by subsequent legislation.

The act further provides that in case the amount designated in the annual budget for the payment of judgments against the city shall have been exhausted, the "common council shall have power, *if they deem it proper*, to appropriate from the money set apart in the budget or annual estimate for contingent expenses, a sufficient sum of money to pay said judgment or judgments, but if no such appropriation be made by the common council, then all judgments shall be paid, in the order in which they shall be filed and registered in the office of controller, from the first money *next annually set apart for that purpose.*"

The respondents contend that, under these provisions, no judgment creditor can claim that his judgment shall be paid absolutely, for its payment is made to depend upon the conditions stated; or insist upon an appropriation in the budget for any fixed sum, for this is controlled by the limit of taxation and the amount of necessary expenditures to sustain the government of the city. The amount for judgments to be provided annually, they say, is to be fixed by the discretion of the common council in framing the budget; and this discretion is to be guided by the limit of taxation for all purposes, and the amount required for police, lights, paving streets, public schools, and

other necessary expenses of the city. These expenditures have heretofore exhausted, and, if the limit of taxation prescribed by the act of March 6, 1876, be enforced, will hereafter continue to exhaust, nearly all the funds raised. The balance remaining is, and, with that limit of taxation, always will be, insufficient to pay any considerable portion of the earliest judgments against the city. So the relator must wait for an indefinite period, — perhaps until the statute has barred her claim, — and take the uncertain chance of obtaining from the city in the distant future any portion of the sum due to her.

The act of March 6, 1876, giving effect to what is known as the "*premium bond plan*," does not hold out to the bondholder the delusive hope of payment in the distant future, which flitters around Act No. 5 of 1870; it cuts him off absolutely, unless he will accept the conditions of the proposed plan. It recites in its preamble that the total debt of the city, bonded and floating, exceeds $23,000,000; that the taxable property of the city has become so reduced in value as to require a tax at the rate of at least five per cent per annum to liquidate the debt; that a tax so exorbitant will render its collection impossible; that the continuation of a tax beyond the ability of the property to pay would lead to a further destruction of the assessable property of the city and to ultimate bankruptcy; and that the city has adopted a plan for the liquidation of its indebtedness, looking to the payment of its creditors in full, "obtaining thereby the indulgence necessary for the public well-being and the maintenance of the public honor."

The plan proposed was an exchange of outstanding bonds for premium bonds; the latter to be of the denomination of twenty dollars each, bearing five per cent interest from Sept. 1, 1875, payable at no designated period, the interest and principal to be paid at the same time and not separately, and the maturity of the bonds — principal and interest — to be determined by chance in the drawing of a lottery. One million of these bonds is to be divided into ten thousand series of one hundred bonds each. The ten thousand series are to be placed in a wheel, and, in April and October of each year, as many series are to be drawn as are to be redeemed, according to a certain schedule

adopted. The bonds composing the series thus drawn are to be entered for payment three months thereafter, principal and interest, and are to be receivable for all taxes, licenses, and other obligations of the city. At the expiration of the three months the bond numbers of the drawn series are to be placed in a wheel and 1,176 prizes, amounting to $50,000, are to be drawn and distributed. Under this plan the city is released from payment of the principal or interest of its debt, except such portion as may be drawn from the lottery each year. As justly observed by counsel in one of the cases before us, under this arrangement, whether a creditor will be paid in one or in fifty years, will depend upon the turn of a wheel and the drawing of a lucky number. Of course this plan disregards all the terms upon which the outstanding bonds of the city — and, among others, those held by the relator — were issued, and postpones indefinitely the payment of both their principal and interest. To induce its adoption by the city's creditors, the act, in its seventh section, provides that no tax for the payment of the principal or interest of other than the premium bonds shall thereafter be levied; repeals all laws requiring or authorizing the city to pay any such tax, and declares that it shall be incompetent for any court to issue a *mandamus* to the officers of the city to levy and collect any interest tax other than on the premium bonds.

For the interest on the premium bonds and other purposes of the city, the act provides that a tax of only one and one-half per cent per annum shall be levied; and this limitation of the taxable power of the corporation is "declared to be a contract not only with the holder of said premium bonds, but also with all residents and taxpayers of said city, so as to authorize any holder of said premium bonds to legally object to any rate of taxation in excess of the rate herein limited."

It is plain that if the provisions of this act can be sustained as a valid exercise of legislative power, the judgment of the relator is practically annulled or rendered so uncertain of payment as to be of little value.

When the bonds were issued, upon which the judgment was recovered, the city was by its charter invested with "all the powers, rights, privileges, and immunities incident to a munici-

pal corporation and necessary for the proper government of the same;" and it could have provided the means, by taxation, for their payment when they became due. As we said in the case already cited, "the power of taxation is an incident to such a corporation, and may be exercised for all the purposes authorized by its charter or subsequent legislation. Whatever the legislature empowers the corporation to do is presumably for its benefit, and may, in 'the proper government of the same, be done." Besides the power thus existing at the time the bonds were issued, the act providing for their issue directed, as already stated, a special tax to be levied each year to meet the annual interest on them. Such being the case, the question is, whether the city has been divested of its power by the act of 1876, which we have mentioned.

The argument in support of the act is substantially this: that the taxing power belongs exclusively to the legislative department of the government, and when delegated to a municipal corporation may, equally with other powers of the corporation, be revoked or restricted at the pleasure of the legislature.

It is true that the power of taxation belongs exclusively to the legislative department, and that the legislature may at any time restrict or revoke at its pleasure any of the powers of a municipal corporation, including, among others, that of taxation, subject, however, to this qualification, which attends all State legislation, that its action in that respect shall not conflict with the prohibitions of the Constitution of the United States, and, among other things, shall not operate directly upon contracts of the corporation, so as to impair their obligation by abrogating or lessening the means of their enforcement. Legislation producing this latter result, not indirectly as a consequence of legitimate measures taken, as will sometimes happen, but directly by operating upon those means, is prohibited by the Constitution, and must be disregarded — treated as if never enacted — by all courts recognizing the Constitution as the paramount law of the land. This doctrine has been repeatedly asserted by this court when attempts have been made to limit the power of taxation of a municipal body, upon the faith of which contracts have been made, and by means of which alone

they could be performed. So long as the corporation continues in existence, the court has said that the control of the legislature over the power of taxation delegated to it is restrained to cases where such control does not impair the obligation of contracts made upon a pledge, expressly or impliedly given, that the power should be exercised for their fulfilment. However great the control of the legislature over the corporation while it is in existence, it must be exercised in subordination to the principle which secures the inviolability of contracts.

The case of *Von Hoffman* v. *City of Quincy*, reported in 4th Wallace, is a leading one on this subject. There the legislature of Illinois had in 1851, 1853, and 1857 passed acts authorizing that city to subscribe for stock of certain railroad companies, and in payment thereof to issue its bonds with coupons for interest annexed. Those acts authorized the city to levy a special annual tax upon the property therein, real and personal, to pay the annual interest upon the bonds, and required that the tax when collected should be set aside as a special fund for that purpose. The city failed to pay the coupons held by the relator for a long time after they became due, and refused to levy the tax necessary for that purpose. The relator thereupon sued the city and recovered judgment. Execution issued thereon being returned unsatisfied, he applied to the Circuit Court of the United States for the Southern District of Illinois for a *mandamus* to compel the authorities of the city to apply to the payment of the judgment any unappropriated funds they had, or, if they had no such funds, to levy a tax under the acts mentioned sufficient for that purpose. The court issued an alternative writ, to which the city authorities answered setting up an act of the legislature of the State, of November, 1863, authorizing the city council to levy a tax for certain special purposes, such as lighting the streets and erecting buildings for schools, and also a tax on all real and personal property to pay the debts and meet the general expenses of the city not exceeding fifty cents on each one hundred dollars of the annual assessed value thereof, and repealing all other laws touching taxes except such as related to their collection, or to streets, alleys, and licenses. And they alleged that the full

amount of taxes thus authorized was in process of collection; that the power of the city in that respect was exhausted; and that the fifty cents on the one hundred dollars when collected would not be sufficient to pay the annual expenses for the year 1864, and the debts of the city. The relator demurred to the answer, and judgment was given against him; but the case being brought to this court, the judgment was reversed. In delivering the unanimous opinion of the court, Mr. Justice Swayne said: —

"It is well settled that a State may disable itself by contract from exercising its taxing power in particular cases. It is equally clear that where a State has authorized a municipal corporation to contract, and to exercise the power of local taxation to the extent necessary to meet its engagements, the power thus given cannot be withdrawn until the contract is satisfied. The State, and the corporation, in such cases, are equally bound. The power given becomes a trust which the donor cannot annul, and which the donee is bound to execute; and neither the State nor the corporation can any more impair the obligation of the contract in this way than in any other. The laws requiring taxes to the requisite amount to be collected, in force when the bonds were issued, are still in force for all the purposes of this case. The act of 1863 is, so far as it affects these bonds, a nullity. It is the duty of the city to impose and collect the taxes in all respects as if that act had not been passed. A different result would leave nothing of the contract, but an abstract right, — of no practical value, — and render the protection of the Constitution a shadow and a delusion." 4 Wall. 535, 554.

The prohibition of the Constitution against the passage of laws impairing the obligation of contracts applies to the contracts of the State, and to those of its agents acting under its authority, as well as to contracts between individuals. And that obligation is impaired, in the sense of the Constitution, when the means by which a contract at the time of its execution could be enforced, that is, by which the parties could be *obliged* to perform it, are rendered less efficacious by legislation operating directly upon those means. As observed by the court in the case cited, "without the remedy the contract may

indeed, in the sense of the law, be said not to exist, and its obligation to fall within the class of those moral and social duties which depend for their fulfilment wholly upon the will of the individual. The ideas of validity and remedy are inseparable, and both are parts of the obligation which is guaranteed by the Constitution. The obligation of a contract 'is the law which binds the parties to perform their agreement.'"

The restraint upon the legislature, to the extent mentioned, by the contract clause of the Constitution, against revoking or limiting the power of taxation delegated by it to municipal bodies as the means of carrying out the purposes of their incorporation or purposes designed for their benefit, is a different matter from that of exempting property from taxation; and even in the latter case it has been adjudged in repeated instances that one legislature can bind its successors. The restraint in no respect impairs the taxing power of the existing legislature or of its successors, or removes any property from its reach.

These views are not inconsistent with the doctrine declared by the decision of the court in the recent case of *Meriwether* v. *Garrett*, 102 U. S. 472. There the charter of the city of Memphis had been repealed, and the State had taken the control and custody of her public property, and assumed the collection of the taxes previously levied, and their application to the payment of her indebtedness. The city with all her officers having thus gone out of existence, there was no organization left — no machinery — upon which the courts could act by *mandamus* for the enforcement of her obligations to creditors. The question considered, therefore, was whether the taxes levied before the repeal of the charter, but not paid, were assets which the court could collect through a receiver and apply upon judgments against the city.

Here, the municipal body that created the obligations upon which the judgment of the relator was recovered, existing with her organization complete, having officers for the assessment and collection of taxes, there are parties upon whom the courts can act. The courts, therefore, treating as invalid and void the legislation abrogating or restricting the power of taxation

delegated to the municipality, upon the faith of which contracts were made with her, and upon the continuance of which alone they can be enforced, can proceed and by *mandamus* compel, at the instance of parties interested, the exercise of that power as if no such legislation had ever been attempted. And that the relator seeks to have done here.

Following the doctrine of *Von Hoffman* v. *City of Quincy*, we are of opinion that the act of March 6, 1876, the provisions of which we have stated, is invalid so far as it limits the power which the city possessed, when the bonds upon which the relator has recovered judgment were issued, to levy a tax for their payment. In thus limiting the power without providing other adequate means of payment of the bonds, the legislature has impaired the obligation of the contract between her and the city.

The judgment of the court below must, therefore, be reversed, and the cause remanded with directions to issue the writ as prayed in the petition of the relator; and it is

So ordered.

MR. JUSTICE HARLAN. I concur in the opinion just delivered, except the paragraph in which reference is made to *Meriwether* v. *Garrett*, 102 U. S. 472. The present case does not require us to determine any question as to the effect which the repeal of a municipal charter may have upon the rights of existing creditors. Nor do I wish to be understood as assenting to the correctness of the statement in the opinion as to what was involved and decided in *Meriwether* v. *Garrett*.

140-486
" 370
108 370
L.ed 567
51f 438

NEAL v. DELAWARE.

1. The adoption of the Fifteenth Amendment rendered inoperative a provision in the then existing Constitution of a State, whereby the right of suffrage was limited to the white race.
2. Therefore, a statute confining the selection of jurors to persons possessing the qualifications of electors is enlarged in its operation so as to embrace all those who, by the Constitution of the State, as modified by that amendment, are entitled to vote.
3. The presumption should be indulged, in the first instance, that the State recognizes as binding on all her citizens and every department of her government an amendment to the Constitution of the United States, from the time of its adoption, and her duty to enforce it, within her limits, without reference to any inconsistent provisions in her own Constitution or statutes.
4. In this case, that presumption is strengthened and becomes conclusive, not only by the direct adjudication of the highest court of the State of Delaware that her Constitution had been modified by force of the amendments to the Constitution of the United States, but by the entire absence of any statutory enactment, since their adoption, indicating that she does not recognize, in the fullest legal sense, their effect upon her Constitution and laws. Where, therefore, a negro, indicted in one of her courts for a felony, presented a petition alleging that persons of African descent were, by reason of their race and color, excluded by those laws from service on juries, and praying that the prosecution against him be removed to the Circuit Court of the United States, — *Held*, that the prayer of the petition was properly denied.
5. Had the State, since the adoption of the Fourteenth Amendment, enacted any statute in conflict with its provisions, or had her judicial tribunals repudiated it as a part of the supreme law of the land, or declared that the acts passed to enforce it were inoperative and void, there would have been just ground to hold that the case was one embraced by sect. 641 of the Revised Statutes, and, therefore, removable into the Circuit Court.
6. The exclusion, because of their race and color, of citizens of African descent from the grand jury that found, and from the petit jury that was summoned to try, the indictment, if made by the jury commissioners, without authority derived from the Constitution and laws of the State, was a violation of the prisoner's rights, under the Constitution and laws of the United States, which the trial court was bound to redress; and the remedy for any failure in that respect is ultimately in this court upon writ of error.
7. Upon the showing made by the prisoner, the motions to quash the indictment and the panels of jurors should have been sustained.
8. The court reaffirms the doctrines announced in *Strauder* v. *West Virginia* (100 U. S. 303), *Virginia* v. *Rives* (id. 315), and *Ex parte Virginia* (id. 339).

ERROR to the Court of Oyer and Terminer of New Castle County, State of Delaware.

The plaintiff in error, a citizen of African descent, was, on May 11, 1880, indicted in the Court of General Sessions of the Peace and Jail Delivery of New Castle County, Delaware, for the crime of rape, — an offence punishable, under the laws of that State, with death. The indictment was, by a writ of *certiorari*, removed for trial into the Court of Oyer and Terminer for the same county, the highest judicial tribunal of Delaware in which the decision of such a case could be had. In the latter court, the accused, by counsel specially assigned for his defence, filed the following petition: —

"In the Court of Oyer and Terminer of the State of Delaware, sitting in and for New Castle County. May Term, A.D. 1880.

"THE STATE OF DELAWARE
v.
WILLIAM NEAL.

"Indictment for Rape, certified from the Court of General Sessions for said County.

"To the Honorable Court of Oyer and Terminer of the State of Delaware, sitting in and for New Castle County.

"The petition of William Neal respectfully represents that your petitioner is the defendant in the above-entitled indictment for the crime of rape alleged to have been committed on one Margaret E. Gosser; that said indictment was found in the Court of General Sessions of the Peace and Jail Delivery for said county, by the grand inquest of said county, on the eleventh day of May instant, and has since been duly certified into the Court of Oyer and Terminer for said county.

"That your petitioner is a citizen of the United States and of the State of Delaware, of African race and descent, and black in color; that, by the statutes of the State, all persons qualified to vote at the general election are liable to serve as jurors, except public officers of the said State or of the United States, counsellors and attorneys at law, ordained ministers of the gospel, officers of colleges and teachers in public schools, practising physicians, surgeons regularly licensed, cashiers of incorporated banks, and all persons who are more than seventy years of age.

"That by the Constitution of the State, the right of an elector is enjoyed only by male citizens above the age of twenty-one years, who are also free white persons, and is not enjoyed by virtue of the

provisions of that Constitution, by persons otherwise qualified, who are not white persons.

"That the Levy Court of New Castle County are required by the law of the State, at its annual session in March, to select from the list of taxable citizens of each county the names of one hundred sober and judicious persons to serve, if summoned, as grand jurors at the several courts to be holden in that year; and also the names of one hundred and fifty other sober and judicious persons to serve, if summoned, as petit jurors in said courts; that said Levy Court for said county, at their annual session in March last, in selecting persons to serve as grand jurors and petit jurors as aforesaid, if summoned, for the courts aforesaid, including both the Court of General Sessions and the Court of Oyer and Terminer, as aforesaid, selected no persons of color, or African race, to serve as such jurors as aforesaid; but, on the contrary thereof, did exclude all colored persons and persons of African race, because of their race and color, from those selected as aforesaid to serve as and be drawn for jurors as aforesaid; that the prothonotary and clerk of the peace for said county drew from the lists of those so selected as aforesaid to serve as grand jurors the grand jurors by whom the said indictment against your petitioner was found, and also drew from the list of those selected as aforesaid to serve as petit jurors the petit jurors by whom your petitioner is to be tried for his life under said indictment, and that from both the grand jury aforesaid and from the said petit jury all persons otherwise qualified by law to serve as jurors as aforesaid who were persons of color and of African race, were excluded as aforesaid, because of their race and color, from serving thereon as jurors, and that said grand and petit juries were drawn from and composed of exclusively white persons, and that, in fact, persons of color and of African race, though otherwise qualified, have always in said county and State been excluded from serving on juries because of their race and color; that by reason of the exclusion as aforesaid from said grand and petit juries in said courts of all persons of color and African race, because of their race and color, though otherwise qualified to serve as jurors, your petitioner, in the finding of said indictment, has been, and in the trial thereof will be, denied the equal protection of the laws; and will not have the full and equal benefit of all laws and proceedings in the State of Delaware for the security of his person in the trial of said indictment as is enjoyed by white persons.

"That by reason of the exclusion as aforesaid of all persons of color and African race from said grand and petit juries in said courts,

and by reason of the Constitution and laws of Delaware in respect to the qualifications of jurors excluding from said grand and petit jury all colored persons of African race, your petitioner is denied, and cannot enforce in the judicial tribunals of the State, a right secured to him by the law of the United States providing for the equal civil rights of citizens of the United States, to wit, the rights under the fourteenth article of the amendments to the Constitution of the United States to the equal protection of the laws; and to the right under said amendment and the acts of Congress in the enforcement thereof to a trial under said indictment for his life by a jury from which the State of Delaware has not excluded all persons of his own race and color because of their race and color.

"Your petitioner therefore prays this honorable court that the said indictment and its prosecution be removed into the Circuit Court of the United States for the District of Delaware for trial at the next ensuing term of said Circuit Court.

"And your petitioner will ever pray.

his
"WILLIAM + NEAL.
mark.

"Sworn to and subscribed by the said William Neal, the thirteenth day of May, A.D. 1880, before me.

JOHN P. SPRINGER, *C. P.*

"STATE OF DELAWARE,

"*New Castle County, ss:*

"On this fourteenth day of May, A.D. 1880, before me, John P. Springer, clerk of the peace and of the Court of Oyer and Terminer and the Court of General Sessions of the Peace and Jail Delivery for New Castle County, personally appeared William Neal, who, being by me first solemnly sworn according to law, says that the facts set forth in the foregoing petition (signed by him by making his mark thereunto in my presence) are true to the best of his knowledge and belief.

his
WILLIAM + NEAL.
mark.

"Sworn to and subscribed before me, as witness my hand and the seal of the Court of Oyer and Terminer the day and year aforesaid.

"JOHN P. SPRINGER, *C. P.*"

The court being of the opinion that the defendant was not entitled to have his case removed to the Circuit Court of the

United States, because there is no law of the State of Delaware forbidding the Levy Court to select persons of African race and of color as jurors, on account of their race and color, if in the judgment of the Levy Court such persons are otherwise qualified to serve as jurors; and because it did not appear that the grand and the petit jury, though composed solely of white men, were so made up because the names of colored men were not selected for jury service on the ground of their race and color; and because the defendant had not shown that he was denied any right secured to him as a citizen of the United States, through the selection of those panels by the Levy Court, — denied the prayer of the petitioner, and refused to certify the indictment and prosecution into the Circuit Court, but compelled him to proceed to trial in the Court of Oyer and Terminer. To which ruling of the court the defendant excepted.

Thereupon the defendant, before he was arraigned, moved to quash the indictment, and the list and panel of grand jurors by whom it was found, upon the following grounds: that the Levy Court, in selecting persons to serve as grand jurors and petit jurors (if summoned) for the Court of General Sessions and the Court of Oyer and Terminer, selected no persons of color or African race to serve as such jurors, but, on the contrary, excluded all colored persons and persons of African race, because of their race and color, from those selected to serve as and be drawn for jurors; that the prothonotary and clerk of the peace for the county drew from the lists of those so selected to serve as grand jurors the grand jurors by whom the indictment against the defendant was found, and also drew from the list of those selected to serve as petit jurors the petit jurors by whom the defendant was to be tried for his life under the indictment; and that from both the grand and the petit jury all persons qualified by law to serve as jurors who were persons of color and of African race were excluded, because of their race and color, from serving thereon as jurors, and that the grand and petit jurors were drawn from and were composed exclusively of white persons, and that, in fact, persons of color and of African race, though otherwise qualified, have always in the county and State been excluded from serving upon juries because of their race and color; and that by reason of such exclusion

from the grand and petit juries of all persons of color and African race, because of their race and color, though otherwise qualified to serve as jurors, the defendant in the finding of the indictment had been, and in the trial thereof would be, denied the equal protection of the laws, and would not have the full and equal benefit of all laws and proceedings in the State of Delaware for the security of his person as is enjoyed by white persons.

It being then and there agreed between the attorney-general on behalf of the State, and the defendant, through his counsel, with the consent of the court, that the statements and allegations of the defendant in his petition for the removal of the indictment, and its prosecution for trial into the Circuit Court and their verification by his oath, should be taken and treated and given the same force and effect, in the consideration and decision of the motions to quash the indictment, and the lists and panels of grand and petit jurors, as if the statements and allegations were made and verified by him in a separate and distinct affidavit; the court thereupon overruled and refused to grant the motion of the defendant to quash the indictment, and the lists and panels of grand jurors and petit jurors, because although in fact no persons of African race and of color were upon either panel no evidence had been produced or offered by him to prove his statements and allegations in his petition and affidavit thereto, upon which the motion to quash was founded, that the exclusion by the Levy Court from the grand and petit juries of all persons of African race and color was because of their race and color, and that the court could not accept such fact of exclusion because of race and color to be established by the circumstance that no persons of African race or of color were, in fact, on the lists and panels of grand jurors and petit jurors, or by his mere unaided affidavit, but the same should have been proven affirmatively on his part by competent testimony outside of his own affidavit, before the motion could be granted. To which ruling the defendant excepted.

Thereupon, before the defendant was arraigned under the indictment, and before he had pleaded thereto, and after the motion of the defendant to quash the indictment and the lists

and panels of grand jurors and petit jurors, because of the alleged exclusion by the Levy Court of New Castle County from the lists and panels of grand jurors and petit jurors of all persons of African race and color, because of their race and color, had been overruled by the court, because the defendant had offered no evidence or witnesses to prove the statements and allegations of his own affidavit that the Levy Court had excluded from the lists and panels of grand jurors and petit jurors all persons of African race and of color, because of their race and color, to wit, on the twenty-fourth day of May, 1880, he further moved the court that he be permitted to produce as witnesses in support of his motion to quash the indictment, and the lists and panels of grand jurors and petit jurors, and in support of the allegations and statements of his petition and affidavit, on which the motion was founded, the commissioners and clerk and bailiff of the Levy Court, and that the court should issue by its clerk subpœnas for the persons as witnesses to testify as aforesaid.

The court overruled the motion, and refused to cause sub pœnas to be issued for the witnesses and to permit the defendant to produce them, or to go into the proof of the statements and allegations of his petition and affidavit on which the motion to quash was founded on the ground that full time to produce the witnesses had existed before the motions were heard; that application for leave to summon witnesses to support a motion which had been argued and refused because of want of proof when sufficient time had existed for its production was without precedent in the Court of Oyer and Terminer of that State, and therefore the motion must be treated as coming too late to be granted; to which ruling of the court the defendant excepted.

The prisoner was then arraigned, and pleaded not guilty. The jury tried the issue, and returned a verdict of guilty. Whereupon he was by the court, May 27, 1880, sentenced to suffer death by hanging. He thereupon sued out this writ of error.

Sect. 1 of art. 4 of the Constitution of Delaware declares that —

"All elections for governor, senators, representatives, sheriffs, and coroners shall be held on the Tuesday next after the first Monday

in the month of November of the year in which they are to be held, and be by ballot.

"And in such elections every free white male citizen of the age of twenty-two years or upwards, having resided in the State one year next before the election, and the last month thereof in the county where he offers to vote, and having within two years next before the election paid a county tax, which shall have been assessed at least six months before the election, shall enjoy the right of an elector; and every free white male citizen of the age of twenty-one years and under the age of twenty-two years, having resided as aforesaid, shall be entitled to vote without payment of any tax: *Provided*, that no person in the military, naval, or marine service of the United States shall be considered as acquiring a residence in this State by being stationed in any garrison, barrack, or military or naval place or station within this State; and no idiot, or insane person, pauper, or person convicted of a crime deemed by law felony, shall enjoy the right of an elector; and that the legislature may impose the forfeiture of the right of suffrage as a punishment for crime."

Chapter 109 of the Revised Statutes of 1853 of the State contains the jury law of Feb. 28, 1849. It is as follows: —

"SECT. 1. All persons qualified to vote at the general election shall be liable to serve as jurors, except public officers of this State, or of the United States, counsellors and attorneys at law, ordained ministers of the gospel, officers of colleges, and teachers of public schools, practising physicians and surgeons regularly licensed, cashiers of incorporated banks, and all persons who are more than seventy years of age.

"SECT. 2. The Levy Court for each county shall, at its annual session in March, select from the list of taxable citizens of such county, in such proportion for each hundred as may be deemed proper, the names of one hundred sober and judicious persons, to serve (if summoned) as grand jurors at the several courts to be holden in that year; and also the names of one hundred and fifty other sober and judicious persons, to serve (if summoned) as petit jurors, at the several courts, other than the courts of quarter sessions, to be holden in that year; and also the names of one hundred and twenty other sober and judicious persons, to serve (if summoned) as jurors at the Court of Quarter Sessions to be holden in that year. There shall be provided for each hundred, three boxes, one of which shall be marked or labelled 'grand jurors,' another 'petit jurors,'

and the other 'quarter sessions jurors,' and each with the names of the hundred. The names of the persons selected as aforesaid shall be written each on a separate ballot, all the ballots being of the same color, size, and shape, and the ballots shall be folded so as to conceal the names written upon them. Those containing the names of persons selected for grand jurors shall be deposited in the boxes marked 'grand jurors,' the names selected from each hundred being placed in the box of that hundred; in like manner the names of persons selected for petit jurors shall be deposited in the boxes marked 'petit jurors,' the names selected from each hundred being placed in the box of that hundred; in like manner the names of persons selected for 'quarter session jurors' shall be deposited in the boxes marked 'quarter sessions jurors,' the names selected from each hundred being placed in the box of that hundred; after which the boxes shall be locked and delivered to the prothonotary and the keys shall be kept by the clerk of the peace. The Levy Court shall preserve lists of the persons selected for jurors, and shall deliver to the said prothonotary, with the boxes aforesaid, copies of said lists signed by the chairman of said court, and countersigned by the clerk thereof, showing the number selected from each hundred.

. . . . . .

"SECT. 4. The prothonotary and clerk of the peace shall, within ten days after the delivery of the said boxes to the prothonotary as above provided, meet in the prothonotary's office, and, first shaking the boxes so as to intermix the ballots, shall, in the presence of such persons as may choose to be present, draw from the box marked 'grand jurors,' in the same proportion for each hundred in which they were selected by the Levy Court, the names of twenty-four persons to be summoned as grand jurors for that year.

"SECT. 5. The prothonotary and clerk of the peace shall, at least twenty days before the commencement of each term of the Superior Court and Court of General Sessions for the county, in like manner draw from the boxes marked 'petit jurors,' in the same proportions for each hundred in which they were selected by the Levy Court, the names of thirty persons to serve as petit jurors at the ensuing term of said courts.

. . . . . .

"SECT. 8. The officers drawing for grand and petit jurors as aforesaid shall, immediately thereafter, deliver to the sheriff of the county a correct list of names of the persons so drawn, with the date of the drawing indorsed thereon.

"SECT. 9. The said boxes shall, immediately after any drawing for jurors, be locked and kept by the prothonotary, the keys being delivered into the custody of the clerk of the peace.

"SECT. 10. The sheriff of the county, upon receiving a list of persons drawn for grand jurors as aforesaid, shall, at least ten days before the next ensuing term of the Court of General Sessions for his county, summon, in writing, each of the said persons to serve as the standing grand jurors for that year at the said court. He shall, in like manner, upon receiving a list of persons drawn for petit jurors as aforesaid, at least ten days before the next ensuing term of the Superior Court and Court of General Sessions, summon, in writing, each of the said persons to serve as petit jurors at the then next term of the said courts respectively.

"The sheriff shall, within one hour after opening of said courts respectively, on the first day of every term, return to each of said courts a separate and distinct panel of persons summoned to attend thereat as grand or petit jurors, showing the Christian and surnames, and places of abode of such jurors.

"SECT. 11. The grand jurors for the year drawn as aforesaid shall be summoned and returned to attend, as grand jurors, at any Court of Oyer and Terminer, when the precept for holding such court directs a grand jury to be summoned.

"For any Court of Oyer and Terminer, forty-eight petit jurors shall, upon notice from the sheriff to the prothonotary and clerk of the peace that such court is to be held, be drawn, summoned and returned according to the foregoing provisions for drawing, summoning and returning petit jurors for the Superior Court and Court of General Sessions.: *Provided*, that if the day assigned for holding a Court of Oyer and Terminer shall be at a time when a petit jury is in attendance upon the Superior Court or Court of General Sessions, such jury shall constitute a part of the panel of the petit jurors to be summoned to attend the said Court of Oyer and Terminer, and only the residue of the said number of forty-eight jurors shall be drawn according to the foregoing provisions."

Mr. Charles Devens and *Mr. Anthony Higgins* for the plaintiff in error.

1. Where, in any prosecution of a man of African race and color, the Constitution or the law of a State excludes from the grand or the petit jury persons because they are of that race and color, the exclusion operates as a denial to him of the equal protection of the laws, and is forbidden by the Fourteenth

Amendment and the Revised Statutes. The prosecution is thereby brought within the provisions of those statutes which authorize its removal into the Circuit Court of the United States. *Strauder* v. *West Virginia*, 100 U. S. 303; *Virginia* v. *Rives*, id. 313; *Ex parte Virginia*, id. 339.

a. The statute and Constitution of Delaware must be taken and construed together in judicially determining what are the qualifications of jurors in that State. It is too plain for argument, that by the express letter of her constitutional and statutory provisions persons of color do not possess the elective franchise, and are excluded from jury service.

b. It is said, however, that the Fourteenth Amendment, the Civil Rights Act, the Fifteenth Amendment, and the acts of Congress passed to enforce it, "repealed" those provisions, or "amended" them by striking out the word "white." The argument of the defendant in error upon this point rests upon the assumed identity of the sovereignty of the United States and the several States, and ignores the fundamental truth that each is a separate sovereign which expresses its will through its own legislative body. Neither the Federal Constitution, nor the laws enacted in pursuance of it, "repeal" repugnant State Constitutions or laws. Such a repeal can be effected only by the power which created them. Delaware, so far from striking the word "white" from her Constitution, voted against the adoption of the Fourteenth and the Fifteenth Amendments, and she has never altered her Constitution to conform to them. In 1874 the legislature revised her statutes. The act of Feb. 28, 1849, was republished. Had she desired to carry into effect the amendments, she could by a simple provision have conferred on colored persons the right to sit on juries. They now vote in Delaware, but that results from the obedience of the election officers to the mandate of the Fifteenth Amendment. They are permitted to testify, because the courts acknowledge the validity and paramount authority of the Civil Rights Act and of the amendment upon which it is based. But the legislature has not indicated its acquiescence in the amendments and the laws made to enforce them. It is upon the ground that the impediment to the full protection of the laws exists by force of an express statute that the petition for removal is founded.

It is a conceded fact that a colored man has never been placed on any jury list in Delaware, and it is no answer to his demand for that right to say that he is permitted to testify and vote.

c. This court held that the case of *West Virginia* v. *Strauder* should have been removed under sect. 641 of the Revised Statutes, because the statute of that State excluding colored persons from juries was repugnant to the Constitution and laws of the United States. The decision is in point here, and its relevancy is not weakened by the fact that the Constitution and statutes of Delaware were in force before, while the statute of West Virginia was passed after, the adoption of the Fourteenth and Fifteenth Amendments and the Civil Rights Acts, including sect. 641, for the removal of causes. The statute of West Virginia being unconstitutional never was a rule of conduct for her people to any greater extent than, after the adoption of the amendments and acts of Congress, the laws of Delaware in conflict therewith were rules of conduct for her people. The law of Delaware and that of West Virginia were equally subject to the same objection, and the point of time at which either was enacted cannot affect the question.

d. So long as the Constitution or the laws of a State, denying the equal civil rights of all persons citizens of the United States, remain unrepealed by the State itself, they constitute that "legislative denial of" or "constitutional or legislative impediment to" such rights of which sect. 641 of the Revised Statutes speaks, and which under it makes an important ground for removal.

Mr. Justice Field, in his separate opinion in *Virginia* v. *Rives*, says: "The denial of rights or the inability to enforce them, to which the section refers, is, in my opinion, such as arises from legislative action of the State. . . . If an executive or judicial officer exercises power with which he is not invested by law, and does unauthorized acts, the State is not responsible for them. The action of the judicial officer in such a case, where the rights of a citizen under the laws of the United States are disregarded, may be reviewed and corrected or reversed by this court; it cannot be imputed to the State, so as to make it evidence that she in her sovereign or legislative capacity

denies the rights invaded, or refuses to allow their enforcement." This doctrine, we submit, fully sustains the position which we assume.

e. It necessarily follows that the right of a prisoner to a removal of the prosecution, when his petition alleges the necessary jurisdictional facts, is not contingent upon the decision which the court of the State may render, but depends on what the State herself has ordained in her Constitution and laws. The jurisdiction of that court is ousted by filing such a petition, and that of the Federal court at once attaches.

2. The Court of Oyer and Terminer should, on the motion of the prisoner, have quashed the indictment, and the panels of grand jurors and petit jurors, on the ground that the Levy Court of New Castle County had excluded from them all persons of African race and color, because of their race and color. The motion should not have been refused because he produced no evidence *aliunde* in support of the allegations of the petition verified by his own oath.

The matters set forth in his petition were, by consent, to be received with like effect in support of the motion as if they had been incorporated in a separate affidavit. The State law was not only executed according to its letter and its narrow proscribing spirit, but there is a distinct and uncontradicted allegation in the petition that the Levy Court excluded from the jury colored men solely by reason of their race and color.

3. The court should have permitted the prisoner to produce proof in support of the allegations on which the motion to quash was grounded, even after it had been argued and overruled.

Mr. George Gray, Attorney-General of Delaware, *contra*.

The truth and sufficiency of the matters set forth in the prisoner's petition for removal must be determined by the court of original jurisdiction, subject to the ultimate revisory power of this court. He did not bring his case within the provisions of sect. 641 of the Revised Statutes.

One of the allegations of the petition is that colored persons are excluded from the grand and petit juries by the Constitution and statutes of Delaware. As there is not a line in either which so excludes them, this allegation, if one of fact, is absolutely unfounded, and if one of law, cannot be sustained.

By the Constitution adopted in 1831 the right of voting was confined to white male citizens, and the jury law declares that persons qualified to vote shall, with certain specified exceptions, be liable to serve on juries. Counsel insist that as the restriction upon the right of suffrage has not been removed in the mode prescribed by the Constitution of Delaware, the jury law must be construed with exclusive reference to the condition of things which existed at the time of its passage. Their contention is that as in Feb. 28, 1849, persons of African descent were not voters, they were not then, nor are they now, competent jurors. That law is prospective in its effect and scope, and would seem to have been drawn in view of all the possibilities of the future. Its true construction is that persons entitled to vote when a grand or a petit jury is selected are liable to serve upon it. Were colored persons so entitled when the jurors were selected in this case? There can be but one answer to this question. The Thirteenth and Fifteenth Amendments being a part of the supreme law of the land, every provision in a State Constitution in conflict with them is null and void. They changed the status of the slave into that of the freeman, and as effectually secured to the colored citizens of Delaware the right of suffrage as if her Constitution had in express terms conferred it. "White" as well as "free," in sect. 1, art. 4, of the existing Constitution is a dead letter. As they have the right to vote, they are liable to serve as jurors. Such is, in effect, the decision of the learned court below, and the fact that they do vote is admitted by the counsel for the prisoner. *Strauder* v. *West Virginia*, upon which they rely, has no application to this case. The State law then under consideration was passed after the adoption of the amendments, and its constitutionality was maintained by the State court.

The right of removal does not depend solely upon the allegations of the petition. If their falsity appears without evidence *aliunde*, as where they relate to a public law or institution, or where facts of which judicial cognizance is always taken are misstated, then the court must be governed by its own knowledge, and say that the *alleged fact* is not really a *fact*. The action below in refusing to order the removal of the cause was obviously proper.

It is maintained on the other side that the court should have quashed the indictment, and the panels of grand and petit jurors, on the ground that the Levy Court had excluded from them all persons of African race and color, because of their race and color; and that the motion should not have been refused because the accused produced no evidence *aliunde* in support of his petition verified by his oath. To this it will be sufficient to say that the granting of the motion on his unsupported allegation of facts, which could not possibly have been within his knowledge, and which, moreover, imputed to all the persons constituting the Levy Court, the commission of grave offences against the law, would reverse all the rules of evidence, overturn all orderly procedure in courts of justice, and contradict the settled maxims of ordinary human experience.

The court properly denied his subsequent application to be allowed to produce as witnesses the commissioners and the clerk and the bailiff of the Levy Court to support the allegations upon which the overruled motion was founded. No prayer for a rehearing was presented, nor was it shown that before the motion was decided due diligence had been used to procure their attendance by process, of which he at all times could have availed himself. The court held "that application for leave to summon witnesses to support a motion which had been argued, and refused because of want of proof, when sufficient time had existed for its production, was without precedent in the Court of Oyer and Terminer of this State, and therefore, in this case, the motion must be treated as coming too late to be granted."

If the motion had been for a rehearing, which in form it was not, but that is the most favorable view in which it can be considered, granting it rested in the discretion of the court, and the action upon it is not subject to review in an appellate tribunal. Refusing to grant a rehearing or a motion for a new trial cannot be assigned for error here, even in a case removed from an inferior court of the United States. The re-examination of the judgments of State courts is limited to a particular class of cases, and to the determination of the Federal questions which they involve. This court, in exercising its jurisdiction

in such cases, has habitually adhered to the construction given below to a local statute, unless such a question was involved. This is believed to be the first attempt to reverse the judgment of a State court upon a ruling which conforms to its established practice, and has no relation to any principle of Federal jurisprudence.

MR. JUSTICE HARLAN, after stating the case, delivered the opinion of the court.

The assignments of error are numerous, but they are all embraced by the general proposition that the court erred as well in proceeding with the case after the petition for removal was filed, as in denying the motions to quash the indictment, and the panels of jurors.

The first question to which our attention will be directed relates to the assertion, by the accused, of the right of removal under sect. 641 of the Revised Statutes. That section declares that, "When any civil suit or criminal prosecution is commenced in any State court, for any cause whatsoever, against any person who is denied or cannot enforce in the judicial tribunals of the State, or in the part of the State, where such suit or prosecution is pending, any right secured to him by any law providing for the equal civil rights of the citizens of the United States, . . . such suit or prosecution may, upon the petition of such defendant filed in said State court at any time before the trial or final hearing of the cause, stating the facts, and verified by oath, be removed, for trial, into the next Circuit Court to be held in the district where it is pending. Upon the filing of such petition all further proceedings in the State court shall cease," &c.

In *Strauder* v. *West Virginia* (100 U. S. 303), *Virginia* v. *Rives* (id. 313), and *Ex parte Virginia* (id. 339), that section was the subject of careful examination, in connection with sect. 1977, which declares that "all persons within the jurisdiction of the United States shall have the same right, in every State and Territory, to make and enforce contracts, to sue, be parties, give evidence, and to the full and equal benefit of all laws and proceedings for the security of persons and property as is enjoyed by white persons, and shall be subject to like pains,

penalties, taxes, licenses, and exactions of every kind and no other." We also considered the validity and scope of the act of March 1, 1875, c. 114, which, among other things, declares that "no citizen, possessing all other qualifications which are or may be prescribed by law, shall be disqualified from service as grand or petit jurors in any court of the United States, or of any State, on account of race, color, or previous condition of servitude." 18 Stat., pt. 3, p. 335.

In those cases it was ruled that these statutory enactments were constitutional exertions of the power to pass appropriate legislation for the enforcement of the provisions of the Fourteenth Amendment, which was designed, primarily, as we held, to secure to the colored race, thereby invested with the rights, privileges, and responsibilities of citizenship, the enjoyment of all the civil rights that, under the law, are enjoyed by white persons; that while a State, consistently with the purposes for which that amendment was adopted, may confine the selection of jurors to males, to freeholders, to citizens, to persons within certain ages, or to persons having educational qualifications, a denial to citizens of the African race, because of their color, of the right or privilege accorded to white citizens, of participating, as jurors, in the administration of justice, is a discrimination against the former inconsistent with the amendment, and within the power of Congress, by appropriate legislation, to prevent; that to compel a colored man to submit to a trial before a jury drawn from a panel from which was excluded, because of their color, every man of his race, however well qualified by education and character to discharge the functions of jurors, was a denial of the equal protection of the laws; and that such exclusion of the black race from juries because of their color was not less forbidden by law than would be the exclusion from juries, in the States where the blacks have the majority, of the white race, because of *their* color.

But it was also ruled, in the cases cited, that the constitutional amendment was broader than the provisions of sect. 641 of the Revised Statutes; that since that section only authorized a removal before trial, it did not embrace a case in which a right is denied by judicial action during the trial, or in the sentence, or in the mode of executing the sentence; that for

denials, arising from judicial action, after the trial commenced, the remedy lay in the revisory power of the higher courts of the State, and, ultimately, in the power of review which this court may exercise over their judgments, whenever rights, privileges, or immunities, secured by the Constitution or laws of the United States, are withheld or violated; and that the denial or inability to enforce in the judicial tribunals of the States, rights secured by any law providing for the equal civil rights of citizens of the United States, to which sect. 641 refers, is, primarily, if not exclusively, a denial of such rights, or an inability to enforce them, resulting from the Constitution or laws of the State, rather than a denial first made manifest at the trial of the case. We held that Congress had not authorized a removal where jury commissioners or other subordinate officers had, without authority derived from the Constitution and laws of the State, excluded colored citizens from juries because of their race.

The essential question, therefore, is whether, at the time the petition for removal was filed, citizens of the African race, otherwise qualified, were, by reason of the Constitution and laws of Delaware, excluded from service on juries because of their color. The court below, all the judges concurring, held that no such exclusion was required or authorized by the Constitution or laws of the State, and, consequently, that the case was not embraced by the removal statute as construed by this court.

The correctness of this position will now be considered.

The Constitution of Delaware, adopted in 1831 (the words of which upon the subject of suffrage had not been changed when the petition for removal was filed, nor since), restricts the right of suffrage at general elections to free white male citizens, of the age of twenty-two years and upwards, who had resided in the State one year next before the election, and the last month thereof in the county where he offers to vote, and who, within two years next before the election, had paid a county tax, which shall have been assessed at least six months before such election, — the prerequisite of a payment of tax being dispensed with in the case of free white male citizens between twenty-one and twenty-two years of age, having the

prescribed residence in the State and county. The only persons excluded by that Constitution from suffrage are those in the military, naval, or marine service of the United States, stationed in Delaware, idiots, insane persons, paupers, and those convicted of felonies.

The statute of Delaware, adopted in 1848, and in force at the trial of this case, provides for an annual selection, by the Levy Court of the county, of persons to serve as grand and petit jurors, and from those so selected the prothonotary and clerk of the peace are required to draw the names of such as shall serve for that year, if summoned. It further provides that all qualified to vote at the general election, being "sober and judicious persons," shall be liable to serve as jurors, except public officers of the State or of the United States, counsellors and attorneys at law, ordained ministers of the gospel, officers of colleges, teachers of public schools, practising physicians and surgeons regularly licensed, cashiers of incorporated banks, and all persons over seventy years of age.

It is thus seen that the statute, by its reference to the constitutional qualifications of voters, apparently restricts the selection of jurors to white male citizens, being voters, and sober and judicious persons. And although it only declares that such citizens shall be liable to serve as jurors, the settled construction of the State court, prior to the adoption of the Fifteenth Amendment, was that no citizen of the African race was competent, under the law, to serve on a jury.

Now, the argument on behalf of the accused is, that since the statute adopted the standard of voters as the standard for jurors, and since Delaware has never, by any separate or official action of its own, changed the language of its Constitution in reference to the class who may exercise the elective franchise, the State is to be regarded, in the sense of the amendment and of the laws enacted for its enforcement, as denying to the colored race within its limits, to this day, the right, upon equal terms with the white race, to participate as jurors in the administration of justice, — and this notwithstanding the adoption of the Fifteenth Amendment and its admitted legal effect upon the constitutions and laws of all the States of the Union.

But to this argument, when urged in the court below, the

State court replied, as does the attorney-general of the State here, that although the State had never, by a convention, or popular vote, formally abrogated the provision in its State Constitution restricting suffrage to white citizens, that result had necessarily followed, as matter of law, from the incorporation of the Fourteenth and Fifteenth Amendments into the fundamental law of the nation; that since the adoption of the latter amendment neither the legislative, executive, nor judicial authorities of the State had, in any mode, recognized, as an existing part of its Constitution, that provision which, in words, discriminates against citizens of the African race in the matter of suffrage; and, consequently, that the statute prescribing the qualification of jurors by reference to the qualifications for voters should be construed as referring to the State Constitution, as modified or affected by the Fifteenth Amendment.

The question thus presented is of the highest moment to that race, the security of whose rights of life, liberty, and property, and to the equal protection of the laws, was the primary object of the recent amendments to the national Constitution. Its solution is confessedly attended by many difficulties of a serious nature, which might have been avoided by more explicit language in the statutes passed for the enforcement of the amendments. Much has been left by the legislative department to mere judicial construction. But upon the fullest consideration we have been able to give the subject, our conclusion is that the alleged discrimination in the State of Delaware, against citizens of the African race, in the matter of service on juries, does not result from her Constitution and laws.

Beyond question the adoption of the Fifteenth Amendment had the effect, in law, to remove from the State Constitution, or render inoperative, that provision which restricts the right of suffrage to the white race. Thenceforward, the statute which prescribed the qualifications of jurors was, itself, enlarged in its operation, so as to embrace all who by the State Constitution, as modified by the supreme law of the land, were qualified to vote at a general election. The presumption should be indulged, in the first instance, that the State recognizes, as is its plain duty, an amendment of the Federal Constitution, from the time of its adoption, as binding on all of its citizens and

every department of its government, and to be enforced, within its limits, without reference to any inconsistent provisions in its own Constitution or statutes. In this case, that presumption is strengthened, and, indeed, becomes conclusive, not only by the direct adjudication of the State court as to what is the fundamental law of Delaware, but by the entire absence of any statutory enactments or any adjudication, since the adoption of the Fifteenth Amendment, indicating that the State, by its constituted authorities, does not recognize, in the fullest legal sense, the binding force of that amendment and its effect in modifying the State Constitution upon the subject of suffrage.

This abundantly appears from the separate opinions, in this case, of the judges composing the Court of Oyer and Terminer. Comegys, C. J., alluding to the Fifteenth Amendment, and the act of March 1, 1875, said: —

"Returning to the point — that our laws forbid the selection of colored persons as jurors. We answer this by saying that we have no such laws. . . . The Fourteenth Amendment, therefore, and the act of 1875 passed by Congress as appropriate legislation for its enforcement, or either, are superior to our State Constitution, and it had to give way to them, and it did so give way, and was repealed, so far as the word 'white' is mentioned therein as a qualification for a voter at a general election, as soon as the amendment was proclaimed to be adopted, and has been so understood and treated by all persons in this State from that time forth. Ever since the last civil rights bill was passed by Congress, negroes have been admitted as witnesses in all cases, civil and criminal, tried in our courts; whereas, before, they could give no evidence in any such cases against a white person except in case of crime, and to prevent a failure of justice, when no white person was present at the time of the transaction competent to give testimony. There is, then, an excision or erasure of the word 'white' in the qualification of voters in this State; and the Constitution is now to be construed as if such word had never been there. We have, then, no law of this State forbidding the Levy Court to select negroes as jurors, because they are negroes, if in their judgment they are otherwise qualified." Wales, J., said: "We know, from actual and personal knowledge of the history of

the times, that since the adoption of the Fifteenth Amendment to the Federal Constitution the provision in the Constitution of Delaware limiting the right to vote to free white male citizens has been virtually and practically repealed and annulled, and that persons of color, otherwise qualified, have exercised and continue to exercise the elective franchise in all parts of this State with the same freedom as the whites. It is not necessary to prove this fact. . . . But there is really no difficulty in reaching the conclusion that under the law regulating the selection of jurors the colored citizen is not excluded. That law was intended by its authors to be prospective in its operation and effect and to include all who would become voters after its passage, as well as the class of persons who were then entitled to vote. It was not a temporary statute, intended only to provide for the then existing state of things, but to reach forward and make one unvarying standard for the qualification of a juror, to wit, that he should be qualified to vote at the general election. This was not the sole standard, but it is the only one pertinent to the discussion of the motion to remove. Whoever, thereafter, might become qualified voters in the State, whether by virtue of amendment to its Constitution, or by virtue of 'the supreme law of the land,' that overrides and supplants State constitutions and State laws, *eo instanti* became qualified for selection and service as jurors. . . . The right secured to the colored man under the Fourteenth Amendment and the civil rights laws is that he shall not be discriminated against solely on account of his race or color, and it follows that no State law can for that cause alone exclude him from the jury box, nor can a State officer be permitted, in the performance of his official duties, to purposely keep the colored man off the jury lists." Houston, J., concurred in the opinion of the other judges, and expressed his surprise that the petition for removal contained the statement that the colored man is not a voter in Delaware by its Constitution and laws. That he said, "is not true, and ought not to be asserted; because there is not a lawyer of any political party that has ever doubted, since the adoption of the Fourteenth Amendment to the Constitution of the United States, that the word 'white,' in our Constitution, was entirely stricken out. That goes to the root of the whole mat-

ter, and there is no discrimination in the Constitution or laws of our State against colored men as jurors."

There is another consideration upon this branch of the case which is entitled to weight. In some of the States, particularly those in which slavery formerly existed, no alteration of the Constitution was possible except in the particular mode prescribed, unless, indeed, the people assumed to disregard the express limitations which their own fundamental law imposed upon the power of amendment. If the Constitution is obeyed, no alteration of its provisions could, in some of the States, be effected short of several years. And if the position taken by counsel be correct, so long as the mere language of the Constitution, as originally framed and adopted by a State, is inconsistent with that equality of civil rights secured by the recent amendments to the Federal Constitution, every civil suit or criminal prosecution in that State, against a colored man, would be removable, under sect. 641 of the Revised Statutes, into the Circuit Court of the United States, although the State, by all its organs of authority, — legislative, executive, and judicial, — should, without reservation or qualification, recognize the legal effect as well of the amendments as of the statutes enacted to enforce them. We cannot believe that the section was intended by Congress to be so far-reaching in its results, or that a reasonable construction of it requires us to hold that the State of Delaware, by its Constitution and laws, denies or prevents, or impairs the enforcement, in its judicial tribunals, of rights secured by any law providing for the equal civil rights of citizens of the United States. Had the State, since the adoption of the Fourteenth Amendment, passed any statute in conflict with its provisions, or with the laws enacted for their enforcement, or had its judicial tribunals, by their decisions, repudiated that amendment as a part of the supreme law of the land, or declared the acts passed to enforce its provisions to be inoperative and void, there would have been just ground to hold that there was such a denial, upon its part, of equal civil rights, or such an inability to enforce them in those tribunals, as, under the Constitution and within the meaning of that section, would authorize a removal of the suit or prosecution to the Circuit Court of the United States. No such case is presented

here. The discrimination complained of does not result from the Constitution or laws of the State, as expounded by its highest judicial tribunal; and, consequently, it could not be made manifest until after the action of the State court in the case commenced. The prosecution against the plaintiff in error was not, therefore, removable into the Circuit Court, under sect. 641. In thus construing the statute we do not withhold from a party claiming that he is denied, or cannot enforce in the judicial tribunals of the State, his constitutional equality of civil rights, all opportunity of appealing to the courts of the Union for the redress of his wrongs. For, if not entitled, under the statute, to the removal of the suit or prosecution, he may, when denied, in the subsequent proceedings of the State court, or in the execution of its judgment, any right, privilege, or immunity given or secured to him by the Constitution or laws of the United States, bring the case here for review.

What we have said leads to the conclusion that the State court did not err in refusing to grant the prayer of the petitioner for removal.

The remaining question relates to the denial of the motions to quash the indictment and the panels of jurors. The grounds upon which the motions are placed were formally and distinctly stated, and are fully set out in the bill of exceptions. They were the same as those assigned in the verified petition filed by the accused for the removal of the prosecution into the Circuit Court of the United States, viz. that from the grand jury that found, and from the petit jury that was summoned to try, the indictment, citizens of the African race, qualified in all respects to serve as jurors, were excluded from the panels, because of their race and color; and that, in fact, persons of that race, though possessing all the requisite qualifications, have always, in that county and State, been excluded because of their race from serving on juries. That colored persons have always been excluded from juries in the courts of Delaware was conceded in argument, and was likewise conceded in the court below. The Chief Justice, however, accompanied that concession with the remark in reference to this case, "that none but white men were selected is in nowise remarkable in view of the fact — too notorious to be ignored — that the

great body of black men residing in this State are utterly unqualified by want of intelligence, experience, or moral integrity to sit on juries." The exceptions, he said, were rare.

Although for the reasons we have given the prisoner was not entitled to a removal of this prosecution into the Circuit Court of the United States, he is not without remedy if the officers of the State charged with the duty of selecting jurors were guilty of the offence charged in his petition. A denial upon their part, of his right to a selection of grand and petit jurors without discrimination against his race, because of their race, would be a violation of the Constitution and laws of the United States, which the trial court was bound to redress. As said by us in *Virginia* v. *Rives*, *supra*, "The court will correct the wrong, will quash the indictment, or the panel; or, if not, the error will be corrected in a superior court," and ultimately in this court upon review.

We repeat what was said in that case, that while a colored citizen, party to a trial involving his life, liberty, or property, cannot claim, as matter of right, that his race shall have a representation on the jury, and while a mixed jury, in a particular case, is not within the meaning of the Constitution, always or absolutely necessary to the equal protection of the laws, it *is* a right to which he is entitled, "that in the selection of jurors to pass upon his life, liberty, or property, there shall be no exclusion of his race, and no discrimination against them, because of their color." So that we need only inquire whether, upon the showing made by the accused, the court erred in overruling the motions to quash the indictment and the panels of jurors.

We are informed by the bill of exceptions that when the motions to quash were made, it was agreed between the State, by its attorney-general, and the prisoner, by his counsel, with the assent of the court, that the statements and allegations in the petition for removal "should be taken and treated, and given the same force and effect, in the consideration and decision" of the motions, "as if said statements and allegations were made and verified by the defendant in a separate and distinct affidavit" The only object which the prisoner's counsel could have had in filing the affidavit was to establish the grounds

upon which the motions to quash were rested. It was in the discretion of the court to hear the motions upon affidavit. No counter affidavits were filed in behalf of the prosecution. Nor does it appear that, on the hearing of the motions, the State controverted, in any form, the allegation, made with the utmost directness, that her officers had purposely excluded from the juries, because of their color, citizens of the African race, qualified to perform jury service. Nor does the bill of exceptions disclose any suggestion or intimation, by the State, of any objection to the prisoner's affidavit as evidence in support of the motions. Under these circumstances, without any evidence, by affidavit or otherwise, upon the part of the State, the motions to quash were submitted for determination. They were overruled, upon the ground that "no evidence had been produced, or offered by the accused," to prove that the alleged exclusion of colored persons from the juries was because of their color. The court said that such fact of exclusion could not be established by the circumstance that no persons of the African race were, in fact, on the panels; but "should have been proven affirmatively on the part of the defendant, and by competent testimony, outside of his affidavit, before said motions to quash could be granted."

Thereupon, before the accused had even been arraigned, or had pleaded to the indictment, he further moved the court to permit him to produce, as witnesses, in support of the motions to quash, "the commissioners of the Levy Court, and the clerk and bailiff of said Levy Court, and that the court should issue by its clerk subpœnas for said persons as witnesses to testify as aforesaid." To the granting of that motion the attorney-general of the State objected, and his objection was sustained. The bill shows that the motion to go into further proof was denied "on the ground that full time to produce such witnesses to make such proof had existed before the motion was heard; that application for leave to summon witnesses to support a motion which had been argued and refused, because of want of proof, when sufficient time had existed for its production, was without precedent in the Court of Oyer and Terminer in this State, and, therefore, in this case, the motion must be treated as coming too late to be granted."

It may be argued that the ruling of the court whereby the prisoner was denied the privilege, after the motions to quash were overruled, and before the trial commenced, of making further proof in support of the charge that both grand and petit juries had been selected in violation of the Constitution and laws of the United States, is not the subject of review in this court. Without discussing that proposition, we may remark, with entire respect for the court below, that the circumstances, in our judgment, warranted more indulgence, in the matter of time, than was granted to a prisoner whose life was at stake, and who was too poor to employ counsel of his own selection. If it be suggested that the commissioners, when summoned, could not have been compelled to testify, it may be answered that they might not have claimed any such exemption. But that objection, however plausible or weighty, did not apply to the clerk and bailiff of the Levy Court. The clerk of the Court of Oyer and Terminer was himself, as we are advised by the opinion of the Chief Justice, the clerk of the Levy Court, attending its sessions and assisting in the transaction of its business. That officer, we may presume, was present in court when the application to examine him as a witness was made. He and the bailiff were in a position, perhaps, to clearly sustain or clearly disprove the allegation that the grand and petit juries were organized upon the principle of excluding therefrom all colored persons, because of their race, — a charge involving the fairness and integrity of the whole proceeding against the prisoner.

But passing by this ruling of the court below as insufficient, in itself, to authorize a reversal of the judgment, we are of opinion that the motions to quash, sustained by the affidavit of the accused, — which appears to have been filed in support of the motions, without objection to its competency as evidence, and was uncontradicted by counter affidavits, or even by a formal denial of the grounds assigned, — should have been sustained. If, under the practice which obtains in the courts of the State, the affidavit of the prisoner could not, if objected to, be used as evidence in support of a motion to quash, the State could waive that objection, either expressly or by not making it at the proper time. No such objection appears to have been made by its attorney-general. On the contrary, the agreement

that the prisoner's verified petition should be treated as an affidavit "in the consideration and decision" of the motions, implied, as we think, that the State was willing to risk their determination upon the case as made by that affidavit, in connection, of course, with any facts of which the court might take judicial notice. The showing thus made, including, as it did, the fact (so generally known that the court felt obliged to take judicial notice of it) that no colored citizen had ever been summoned as a juror in the courts of the State, — although its colored population exceeded twenty thousand in 1870, and in 1880 exceeded twenty-six thousand, in a total population of less than one hundred and fifty thousand, — presented a *prima facie* case of denial, by the officers charged with the selection of grand and petit jurors, of that equality of protection which has been secured by the Constitution and laws of the United States. It was, we think, under all the circumstances, a violent presumption which the State court indulged, that such uniform exclusion of that race from juries, during a period of many years, was solely because, in the judgment of those officers, fairly exercised, the black race in Delaware were utterly disqualified, by want of intelligence, experience, or moral integrity, to sit on juries. The action of those officers in the premises is to be deemed the act of the State; and the refusal of the State court to redress the wrong by them committed was a denial of a right secured to the prisoner by the Constitution and laws of the United States. Speaking by Mr. Justice Strong, in *Ex parte Virginia*, we said, and now repeat, that "a State acts by its legislative, its executive, or its judicial authorities. It can act in no other way. The constitutional provision, therefore, must mean that no agency of the State, or of the officers or agents by whom its powers are executed, shall deny to any person within its jurisdiction the equal protection of the laws. Whoever, by virtue of public position under a State government, deprives another of property, life, or liberty without due process of law, or denies or takes away the equal protection of the laws, violates the constitutional inhibition; and as he acts in the name and for the State, and is clothed with the State's authority, his act is that of the State. This must be, or the constitutional prohibition has no meaning."

The judgment of the Court of Oyer and Terminer will be reversed, with directions to set aside the judgment and verdict, as well as the order denying the motion to quash the indictment and panels of jurors, and for such proceedings, upon a further hearing of those motions, as may be consistent with the principles of this opinion; and it is

So ordered.

MR. CHIEF JUSTICE WAITE and MR. JUSTICE FIELD dissented.

MR. CHIEF JUSTICE WAITE. I am unable to concur in this judgment. We said in *Virginia* v. *Rives* (100 U. S. 313), that the mere fact that no person of color had been allowed to serve on juries where colored men were interested, was not enough to show that they had been discriminated against because of their race. That is all that was shown in this case on the motions to quash, except that the accused declared in his affidavit that the exclusion of colored men from juries in Delaware had been because of their race. I cannot believe that the refusal of the court, on such an affidavit unsupported by any evidence, to quash the indictment and the panel of jurors because he had been discriminated against on account of his race, was such an error in law as to justify a reversal of the judgment. As the motions had once been submitted on his affidavit alone and decided, it rested in the discretion of the court to allow a rehearing and permit further evidence to be introduced. The refusal of the court to do so cannot, as I think, be assigned for error here.

MR. JUSTICE FIELD. I am unable to concur with the majority of the court in the decision in this case. It proceeds upon two assumptions, both of which, in my judgment, are erroneous: one, that on motions to the court the averments of a party as to matters not resting within his personal knowledge, if not specially contradicted, are to be taken as true; the other, that the clause in the Fourteenth Amendment to the Constitution, prohibiting the States from denying to any person within their jurisdiction the equal protection of the laws requires them,

in cases affecting the rights and interests of persons of the colored race, to summon persons of that race for jury service.

The defendant, who is a colored man, was indicted in May, 1880, in the court of general sessions for the county of New Castle, in the State of Delaware, for a rape upon a white woman, a crime punishable in that State with death. On motion of the attorney-general of the State, the indictment was removed for trial to the Court of Oyer and Terminer of the county. The defendant then presented a petition, praying for its removal to the Circuit Court of the United States, setting forth as grounds for the application, that he was a citizen of the United States and of the State of Delaware, of African race and descent; that by the statutes of the State all persons qualified to vote at its general elections were liable to serve as jurors, with certain exceptions, not important to be here mentioned; but that, by the Constitution of the State, the right of an elector was enjoyed only by free white male citizens over the age of twenty-one years; that the Levy Court of New Castle County was required, at its annual session in March, to select from the list of the taxable citizens of the county the names of one hundred sober and judicious persons to serve, if summoned, as grand jurors at the several courts to be held that year; and also the names of one hundred and fifty other sober and judicious persons to serve, if summoned, as petit jurors in such courts; that the Levy Court, at its session in March, 1880, in thus selecting persons to serve, if summoned, as grand and petit jurors in those courts, including that of the general sessions and that of Oyer and Terminer, had selected no persons of color or African race, but, on the contrary, had excluded them because of their race and color; that the prothonotary and clerk of the peace of the county had drawn from the list of those thus selected the grand jurors by whom the indictment against the petitioner was found, and the petit jurors by whom he was to be tried, and that persons of color and of African race, though otherwise qualified, had always been excluded from serving on juries, in the county and State, because of their race and color; that by reason thereof, the petitioner, in the finding of the indictment had been, and in the trial thereof would be, denied the equal protection of the laws; and further, that by the exclusion of all

persons of color and African race from the grand and petit juries of the State, by force of its Constitution and laws, the petitioner was denied, and could not enforce in its judicial tribunals, the right secured to him by the act of Congress providing for the equal civil rights of citizens of the United States.

The Constitution of Delaware was adopted in 1831; and the counsel for the defendant, in presenting the petition, assumed that its limitation of the right of suffrage to white male citizens was still operative, notwithstanding the Fifteenth Amendment, and that as white persons are there named as electors, only such were allowed to serve as jurors. But this view is clearly untenable. The Fifteenth Amendment took effect upon its adoption, and operated to strike out the word "white" from the Constitution of Delaware; and such has been the uniform ruling of the courts of that State. The Court of Oyer and Terminer, accordingly, held that there was no law of the State forbidding the Levy Court to select persons of African race and color as jurors because of their race and color, if otherwise qualified; and further, that it did not appear that the grand and petit juries, though composed entirely of white persons, were so made up by the exclusion of colored persons on the ground of their race and color, or that the defendant was denied any right secured to him as a citizen of the United States through the selection of those panels. The application for a removal of the indictment to the United States Circuit Court was, therefore, denied. It is not necessary to justify this ruling by any extended argument, for it is held by a majority of this court that the removal was properly refused.

The defendant then moved to quash the indictment and the panel of grand jurors by which it was found, and the panel of petit jurors summoned for its trial, giving as reasons for the motion the action of the Levy Court in selecting persons to serve, if summoned, as grand and petit jurors, and the action of the prothonotary and clerk of the peace of the county in drawing the jurors from the list of those selected, and the consequent deprivation of the petitioner's rights, all of which are stated in the petition for the removal of the case. No additional affidavit was filed; but the attorney-general of the State waived this omission, and consented that the statements in that petition

should be taken and treated as of the same force and effect in the consideration of the motion to quash as if presented by a separate affidavit. The motion was then heard, and after being retained under advisement for some days was denied, because, although in fact no persons of African race or color were on the panel either of the grand or petit jury, no evidence had been produced or offered by the defendant to prove his statement that the exclusion was by reason of their color or race, and the court could not accept such fact as established from the circumstance that no such persons were on either list or panel, nor from the unaided affidavit of the defendant; but held, that it should have been proved affirmatively by competent testimony outside of his own affidavit. This ruling constitutes, in the opinion of the majority of the court, reversible error.

It is obvious that the mere fact that no persons of the colored race were selected as jurors is not evidence that such persons were excluded on account of their race or color. The law only required one hundred "sober and judicious" persons to be selected to serve as grand jurors, and one hundred and fifty such persons as petit jurors, out of the whole body of the county, and these numbers may have been selected without any other consideration than their merit and fitness to perform jury duty. There is no suggestion that the grand jurors by whom the indictment was found, or the petit jurors summoned for the trial, had not the prescribed qualifications, and were not "sober and judicious" men. It would seem, when the law has been obeyed, as in this case, that something more than the mere absence of colored persons from the panels should be shown before they can be set aside. And the fact that colored persons had never, since the act of Congress of May 1, 1875, been selected as jurors may be attributed to other causes than those of race and color.

In *Virginia* v. *Rives*, which was before us at the last term, it was urged for the removal of the indictment against persons of the colored race from the State to the Federal court, that the grand jury by which they were indicted, and the jury by which they were to be tried, were composed wholly of persons of the white race, and that none of their race had ever been

allowed to serve as jurors in the county of Patrick (where the indictment was found, and the trial was to take place), in any case in which a colored man was interested; but the court, speaking through Mr. Justice Strong, said that this statement fell "short of showing that any civil right was denied, or that there had been any discrimination against the defendants because of their color or race. The facts may have been as stated, and yet the jury which indicted them, and the panel summoned to try them, may have been impartially selected." 100 U. S. 313, 322. Upon this subject the court below said: —

"That none but white men were selected is in nowise remarkable in view of the fact — too notorious to be ignored — that the great body of black men residing in this State are utterly unqualified by want of intelligence, experience, or moral integrity to sit on juries. Exceptions there are, unquestionably, but they are rare, and so much so, that it is not often that more than one colored man appears upon a panel in the United States courts which have a whole State to select from; whereas in this case the selection was confined to a single county. And in support of the suggestion of unfitness, we have the fact that though the constitutional amendment and the legislation 'appropriate' to carry it into effect have been in force, the former for about fifteen years and the latter over five years, yet no instance has yet occurred where parties to a proceeding — and they are very often colored men - - have ever selected a man of African descent as a referee. This fact is not to be disregarded in assigning a cause for the exclusion of negroes from juries, if such exclusion could be shown to have been made. With our knowledge, as men of the State, of the African race in Delaware, and of the circumstance just referred to, it would be wholly unwarranted in us to infer exclusion for the mere reason of color, because our juries are, in point of fact, composed of white men alone; or to entertain a suspicion of such cause unless it had better support than the wholly unsupported affidavit of the defendant. To impute to the levy court a purpose to do otherwise than perform their duty by the selection of 'sober and judicious' persons to serve upon the juries, as the law requires, would be a wrong on our part upon the well-known principle that, in the absence of proof to the contrary, a public officer,

discharging an official obligation or function, is to be presumed to have done it faithfully according to law."

It also seems to me plain that the court below properly refused to accept as true the statements in the defendant's affidavit. If the unsupported statements of a party thus made could be taken as true, on a motion to quash, very few indictments would stand before the affidavits which would be offered. Here the affidavit was as to matters which could not possibly have been within the knowledge of the petitioner. However positive his averments, they must, therefore, be taken, like the averments as to the law of the State, as made upon information and belief only. It also imputed grave offences to the officers of the Levy Court, if the act of Congress on the subject of jurors in State courts is valid. Under these circumstances, to accept as conclusive his statements would be — as was well observed by counsel — to reverse all the rules of evidence, overturn all orderly procedure in courts of justice, and contradict the settled maxims of ordinary human experience. It would be giving to his expression of opinion and belief, as to the criminal conduct of public officers, the force of positive proof.

After the decision of the motion the defendant applied for leave to produce the commissioners and the clerk and bailiff of the Levy Court as witnesses to establish his statements, and that subpœnas be issued for them. This application was denied on the ground that sufficient time had existed to produce such witnesses before the motion was heard, the court observing that "application for leave to summon witnesses to support a motion which had been argued and refused because of want of proof, when sufficient time had existed for its production, was without precedent in the Court of Oyer and Terminer of the State, and, therefore, in this case, the motion must be treated as coming too late." I may add to what is thus stated, that, so far as my knowledge extends, the application is without precedent in any court. Applications may be heard for a rehearing; but until a rehearing is had it is not permissible to call witnesses for the motion already decided. Besides this consideration, there was no affidavit, nor suggestion, by the defendant that the officers named would support his statement. His

motion was simply for permission to make the experiment by calling them to the stand. The prothonotary and clerk of the peace were not shown to have had any knowledge on the subject; and the commissioners of the Levy Court could not have been required to answer as to the asserted fact that persons were excluded by them from the jury list on account of their race or color. If the law of Congress prohibiting such exclusion be valid, the commissioners by such action would have subjected themselves to penalties. And, whilst it is true that a witness may not claim exemption from answering questions where the answer might subject him to a criminal prosecution, yet it would be an unusual thing to require parties to be summoned upon a suggestion that they might be willing to criminate themselves and thus furnish support to a motion. The refusal to allow the defendant to make such an experiment with the commissioners, and to enter on an exploring expedition with the others named, does not appear to be a harsh ruling meriting animadversion, but one perfectly just and proper. And in this connection the statement of counsel of the defendant in their printed brief is not to be overlooked, that it was not in his power "to produce any evidence of the intent with which the Levy Court excluded men of his race and color from the jury lists, other than the presumptive evidence already discussed," — that is, such as arose from the fact that they had always been excluded from jury service; a statement which is equivalent to an admission that the right for which counsel now contend, had it been allowed to the defendant, would have been of no avail to him.

But erroneous as I deem the ruling of the majority of this court in the weight accorded to the unsupported averments of the defendant, as to matters not within his personal knowledge, the meaning given to the concluding clause of the Fourteenth Amendment presents a matter for consideration of far greater importance. True, the opinion only reaffirms the doctrine in the cases from Virginia decided at the last term. I thought the doctrine erroneous then, and with great deference to my associates, I must say, that after a careful and repeated perusal of their opinion, my conviction remains unchanged. The legislation of Congress, which requires persons of the colored race

to be admitted to serve as jurors in State courts, is contained in the fourth section of the act of March 1, 1875, c. 114, "to protect all citizens in their civil and legal rights," which declares: "That no citizen possessing all other qualifications, which are or may be prescribed by law, shall be disqualified for service as grand or petit juror in any court of the United States, or of any State, on account of race, color, or previous condition of servitude; and any officer or other person charged with any duty in the selection or summoning of jurors, who shall exclude or fail to summon any citizen for the cause aforesaid, shall, on conviction thereof, be deemed guilty of a misdemeanor, and be fined not more than five thousand dollars."

Before the adoption of the Thirteenth, Fourteenth, and Fifteenth Amendments to the Constitution, no one would have pretended that Congress possessed any power to legislate with respect to jurors — grand or petit — in the State courts. Upon no one subject would there have been a more general concurrence of opinion than that their selection was a matter entirely of State regulation; that it was for the States exclusively to determine who should be liable to serve as jurors in their courts, what qualifications they should possess, and in what manner they should be selected. Indeed, it was competent for the States to dispense completely with juries, and to require all suits, civil and criminal, to be determined without their aid.

Of the three amendments, it is plain that the Thirteenth and Fifteenth have no bearing upon the selection of jurors. The Thirteenth prohibits slavery and involuntary servitude, except in punishment for crime, within the United States, or in any other place subject to their jurisdiction. It makes every one within all our broad domain, and wherever our jurisdiction extends, on land or sea, a freeman, with the same right to pursue his happiness as all others, and on like conditions. But it does not undertake to do anything more; it does not confer any political rights; it leaves the States with all their previous powers to determine who shall fill their offices and be intrusted with the administration of their laws. A similar provision was found in the constitutions of all the Free States, and it was never supposed that it impaired in any respect the sovereign

right and power of the people of every State to determine to whom they would confide the trusts of government.

The Fifteenth Amendment only prohibits the denial or abridgment of the elective franchise to citizens by reason of their race, color, or previous condition of servitude. It excludes from the power of the State one ground of limitation upon the qualification of voters; it relates to no other subject. It is, then, to the Fourteenth Amendment that the advocates of the congressional act must resort to find authority for its enactment, and to the first section of that amendment, which is as follows: "All persons born or naturalized in the United States, and subject to the jurisdiction thereof, are citizens of the United States, and of the State wherein they reside. No State shall make or enforce any law which shall abridge the privileges or immunities of citizens of the United States, nor shall any State deprive any person of life, liberty, or property, without due process of law, nor deny to any person within its jurisdiction the equal protection of the laws."

In the first clause of this section, declaring who are citizens of the United States, there is nothing which touches the subject under consideration. The second clause, declaring that "no State shall make or enforce any law which will abridge the privileges or immunities of citizens of the United States," is limited, according to the decision of this court in *Slaughter-House Cases*, to such privileges and immunities as belong to citizens of the United States, as distinguished from those of citizens of the State. If this construction be sound, — and, restricted as it is, it has not been overruled by those who approve of a loose and latitudinarian construction of another clause of the same section, — it will not be contended that the privilege of persons to act as jurors is covered by the inhibition. But if a broader construction be given to the clause, such as was advocated by the dissenting judges in *Slaughter-House Cases*, the inhibition can have no application. The Constitution, previous to this amendment, declared that "the citizens of each State shall be entitled to all privileges and immunities of citizens in the several States," and it was never supposed or contended that jury duty or jury service was included among those privileges and immunities. The third clause, which

declares that no State shall deprive any person of life, liberty, or property without due process of law, has no reference to this subject. That is a provision found in all our State constitutions from the origin of the government, and is intended to protect life, liberty, and property from arbitrary legislation. It is upon the last clause of the section that the majority of the court are compelled to rely to sustain the act of Congress. "No State shall deny to any person within its jurisdiction the equal protection of the laws." What, then, is meant by this provision, "equal protection of the laws"? All persons within the jurisdiction of the State, whether citizens or foreigners, male or female, old or young, are embraced in its comprehensive terms. If to give equal protection to them requires that persons of the classes to which they severally belong shall have the privilege or be subject to the duty — whichever it may be — of acting as jurors in the courts in cases affecting their interests, the mandate of the Constitution will produce a most extraordinary change in the administration of the laws of the States; it will abolish the distinctions made in the selection of jurors between citizens and foreigners, and between those of our race and those of the Mongolian, Indian, and other races, who may be at the time within their jurisdiction. A Chinaman may insist that people of his race shall be summoned as jurors in cases affecting his interests, and that the exclusion is a denial to him of the equal protection of the laws. Any foreigner, sojourning in the country, may make a similar claim for jurors of his nation. It is obvious that no such claim would be respected, and yet I am unable to see why it should not be sustained, if the construction placed upon the amendment by the majority of the court in this case be sound.

It seems to me that the universality of the protection contemplated by the clause in question renders the position of the majority of the court untenable. No one can truly affirm that women, the aged, and the resident foreigner, whether Caucasian or Mongolian, though excluded from acting as jurors, are not as equally protected by the laws of the State as those who are allowed or required to serve in that capacity. To afford equality of protection to all persons by its laws does not require the State to permit all persons to participate equally in the

administration of those laws, or to hold its offices, or to discharge the trusts of government. Equal protection of the laws of a State is extended to persons within its jurisdiction, within the meaning of the amendment, when its courts are open to them on the same terms as to others, with like rules of evidence and modes of procedure, for the security of their persons and property, the prevention and redress of wrongs, and the enforcement of contracts; when they are subjected to no restrictions in the acquisition of property, the enjoyment of personal liberty, and the pursuit of happiness, which do not equally affect others; when they are liable to no other nor greater burdens or charges than such as are laid upon others, and when no different nor greater punishment is enforced against them for a violation of the laws. When this condition of things exists in a State, there is that equality before the law which is guaranteed to all persons within its jurisdiction. The amendment, as I said in *Ex parte Virginia*, "secures to all persons their civil rights upon the same terms; but it leaves political rights, or such as arise from the form of government and its administration, as they stood previous to its adoption. It has no more reference to them than it has to social rights and duties, which do not rest upon any positive law, though they are more potential in controlling the intercourse of individuals. . . . This is manifest from the fact that when it was desired to confer political power upon the newly made citizens of the States, as was done by inhibiting the denial to them of the suffrage on account of race, color, or previous condition of servitude, a new amendment was required." 100 U. S. 339, 368.

The position that in cases where the rights of colored persons are concerned it is essential for their protection that individuals of their race should be summoned as jurors, is founded upon the assumption that in such cases white persons will be prejudiced jurors. "If this position," as I said in the case cited, "be correct, there ought not to be any white persons on the jury when the interests of colored persons only are involved. That jury would not be an honest or fair one, of which any of its members should be governed in his judgment by other considerations than the law and the evidence; and

that decision would hardly be considered just which should be reached by a sort of compromise, in which the prejudices of one race were set off against the prejudices of the other." Id. 369.

As I am unable to find any warrant in the Fourteenth Amendment for the legislation of Congress interfering with the selection of jurors in the State courts, or to perceive, even if that legislation be deemed valid, any error in the ruling of the court of Delaware I am of opinion that its judgment should be affirmed.

CODDINGTON v. RAILROAD COMPANY.

36f-634

A., pursuant to his contract, surrendered to a railroad company coupons attached to some of its bonds, whereof he was the holder, and took in exchange therefor certificates of preferred stock. The road, with its franchises, was subsequently sold by the trustees of the Internal Improvement Fund of Florida, to pay the bonds, whereof those, which he held, constituted a part. Eight years after the sale he brought this suit to rescind the contract upon the ground of fraud, all the particulars of which were as well known to him when the sale was made as at any subsequent time. *Held*, that his right to relief was barred by his laches and by the Statute of Limitations.

APPEAL from the Circuit Court of the United States for the Northern District of Florida.

The facts are stated in the opinion of the court.

Mr. D. P. Holland for the appellant.
Mr. C. W. Jones, contra.

MR. JUSTICE MILLER delivered the opinion of the court.

The allegations of the complainant's bill, which was dismissed on demurrer, show that prior to 1866 he was the owner of two hundred and fifty-two first-mortgage bonds of the defendant, the Pensacola and Georgia Railroad Company, with several overdue coupons of interest attached; that in 1866 the president of the company induced him to exchange these coupons for certificates of its preferred stock; that he afterwards bought of other persons similar certificates, which had, in like manner,

been received in exchange for unpaid coupons, so that in 1869 he was the owner of $64,085 of these certificates; and that the surrender of the coupons in exchange for the certificates was a fraud practised upon him by the president, on whose representations he relied.

In what this fraud consisted is nowhere stated, except that the company had no authority under its charter to issue such stock, and that if it had, the certificates were invalid for want of the common seal of the company to them.

We do not think it necessary to decide either of these questions. They depend upon either the general statutory law of Florida, or the charter of the company, of both of which the complainant must be presumed to have had notice. He was certainly bound to know that the certificates which he received were without the seal of the company.

There is no allegation of any other fraud, nor of the time of the discovery of any fraud.

The Statute of Limitations of Florida enacts that all actions, except those for recovery of real estate, must be commenced within three years after the right accrues, but in an action for relief on the ground of fraud, the cause of action is not deemed to have accrued until the discovery by the aggrieved party of the facts constituting the fraud.

All the facts now alleged to constitute the fraud in this case were as well known to the complainant at the time of the transaction as they now are.

The trustees of the internal improvement fund, under the authority vested in them by law, sold out the railroad company, its property and franchises, by way of foreclosure of the mortgage which secured the bonds and coupons of the complainant and others, in 1869, for the sum of $1,220,000. The bill alleges that this was without authority of law, but no sufficient reason for the latter allegation is given.

It does not appear that the complainant ever made any demand upon these trustees for the share of this money due him on account of these coupons, or notified them or the railroad company of his intention to rescind the contract. As far as this bill shows, his first action or notice of intention to rescind the contract or to assert rights to or under the coupons is this

suit, brought in 1877, eight years after the railroad and the franchises of the company had passed to purchasers under that sale.

An attempt to evade the Statute of Limitations and the doctrine of laches is made by the following allegations: —

"Your orator further alleges and charges that by the said act of the said trustees he has been unable to follow said property, except without setting aside said sale and title to the said property. That the president of said company shortly afterwards moved out of the State of Florida and has since died; that the secretary of the company turned over all the books and papers to some parties to your orator unknown, and that the said secretary, F. H. Flagg, has since died; that your orator has not been able to find any board of directors of said company since A.D. 1869.

"That your orator is informed and believes that there has been no president or secretary elected by the stockholders or others, and no board of directors, since 1869; that he has failed to get any relief, nor can he find any board of directors to whom to apply for relief since 1869."

The act of the trustees here referred to was the sale of the road for the foreclosure of the mortgage. All the practicable relief which the complainant can obtain by this bill is against the fund arising from the sale in the hands of the trustees of the improvement fund. This relief could better have been had immediately after the sale than now. There has been during all this time no obstruction to a suit against them. The railroad company became of no consequence, had no property and no interest in this litigation after the sale.

It is by no means evident that if they were liable to a suit, that some one could not have been found on whom service could have been made. There was during all this time the same means of serving process on the company that existed when the present suit was brought.

The marshal in this suit returns a service on D. W. George, one of the directors of the company in Florida, and he was probably a resident director during all that time. Upon this service the railroad company appeared by counsel and demurred.

We are of opinion that both by reason of the Statute of Limitations and the general doctrine of laches, in failing to tender his certificates in due time and assert a rescission of the contract, the demurrer was well taken.

Decree affirmed.

LINCOLN v. IRON COMPANY.

1. Where a municipal corporation, being thereunto authorized upon the performance of certain prerequisites, has issued its bonds, which get into circulation as commercial securities, — *Held*, that they are *prima facie* binding on the corporation according to the terms and conditions expressed on their face, and that, in an action on them, or the coupons thereto attached, the plaintiff need not aver such performance.
2. Want of such performance, when in any case available to defeat a recovery, must be set up by the corporation.
3. A verdict cures a defective statement of a title or cause of action.
4. A verdict in assumpsit, the plea being *non assumpsit*, "that the defendant is guilty in manner and form as alleged in the declaration," is amendable, and judgment may be rendered thereon for the damages thereby assessed.

ERROR to the Circuit Court of the United States for the Western District of Michigan.

This was an action brought by the Cambria Iron Company against the township of Lincoln, a body corporate and politic, in the county of Berrien, created under the laws of Michigan. Judgment was rendered for the plaintiff, and the township sued out this writ of error.

The facts are fully stated in the opinion of the court.

Mr. H. F. Severens for the plaintiff in error.

Mr. M. J. Smiley for the defendant in error.

MR. JUSTICE BRADLEY delivered the opinion of the court.

The principal question raised in this case by the assignment of errors is as to the sufficiency of the first and second counts of the declaration. These counts are upon certain bonds alleged to have been made and executed by the township of Lincoln, in the county of Berrien, and State of Michigan, in

aid of a railroad company; and the objection made to them is that they do not aver that an election was held to authorize the issue of the bonds, as required by law, and do not aver various other prerequisites to such issue. The question is whether the omission to make these averments is error.

The law from which the authority of the township to issue bonds is derived was passed March 22, 1869, and was entitled "An Act to enable any township, city, or village to pledge its aid, by loan or donation, to any railroad company," &c.

The first section declared that it should be lawful for any township or city to pledge its aid to any railroad company chartered or organized under and by virtue of the laws of the State of Michigan, in the construction of its road, by loan or donation, with or without conditions, for such sum or sums not exceeding ten per cent of the assessed value of the property in such township or city, as a majority of its electors voting should, at a meeting called for that purpose, determine. The second section prescribed the manner of calling the election, and giving notice thereof. The third section directed the manner in which the elections should be conducted, and the recording of the proceedings on the records of the township or city. The fourth section authorized the issue of coupon bonds for the amount of aid voted, and prescribed the form of the bonds and the manner of their execution; if issued by a township they were to be executed by the supervisor and township clerk, and under the seal of the township if it had one. Subsequent sections directed that the bonds when executed should be delivered to the State treasurer as trustee for the municipality and the railroad company; that the treasurer should record them in a book so as to show their amount, date, number, &c.; and that he should deliver them out to the railroad company whenever the company should present a certificate of the governor of the State that it had complied with the provisions of the act, and was entitled to the bonds; that upon delivering them he should indorse upon each bond the date of delivery, and notify the clerk of the township or city; and that the township or city should levy the necessary taxes to meet the interest and principal as they became due. The eleventh section provided that no bonds should be delivered to the railroad

company until it should have complied with the conditions voted, and completed its road through or into the township or city concerned, according as the charter required, and thence to its terminus or to some connecting line of railroad; or, if not touching such township or city, then that it should have completed its road through the adjoining municipality, or for a certain number of miles adjoining the nearest terminus.

The declaration, after referring to this statute, and stating the organization of the Chicago and Michigan Lake Shore Railroad Company under the laws of Michigan, having for its object the construction of a railroad from New Buffalo through and beyond the township of Lincoln, proceeds, in the first count, to aver that on the 1st of June, 1869, the township, acting under and in accordance with the authority conferred upon it by said act of the legislature, made a donation to said railroad company, and for that purpose made and executed four certain bonds, payable to the said company or bearer (describing them), which bonds were duly delivered to the company, as provided in the act; that the plaintiff (the Cambria Iron Company) on a certain day named, and before the maturity of the bonds, became and is now the owner, holder, and bearer of said bonds for value; and that the bonds are due and have not been paid. The second count describes four other bonds issued by the township under the authority given to it by the said act as a further donation to the said railroad company, and certain interest coupons attached to said bonds and payable to bearer, of which it is stated the plaintiff became the lawful owner and holder for value before maturity, and which have become due and have not been paid. The declaration contained also the common money counts. The defendant pleaded in abatement want of service of process; to which plea a demurrer was put in and sustained by default, for want of a joinder in demurrer. The defendant also pleaded the general issue, and gave notice of several special defences; as, that the Chicago and Michigan Lake Shore Railroad Company, and not the defendant, was owner of the bonds; that whatever of indebtedness was referred to in the declaration arose by reason of a vote of certain of the electors of the township to aid in the construction of the railroad of the Chicago and Michigan Lake Shore Railroad

Company; that the bonds in suit were delivered to said company in fraud of the township; and "that when said bonds and the coupons for interest were so delivered, the road-bed of said railroad was not completed; that through said township of Lincoln the culverts were not built, nor were the bridges done or completed, nor was said railroad fenced, nor were the ties laid down, nor was the iron laid thereon, nor had the road crossings been completed, nor the cattle-guards constructed."

The cause came on for trial, and the following is the record of the proceedings which subsequently took place: —

This cause having been called for trial, the following jury was called and sworn, to wit: [giving the names of the jurors], who sat together in the jury box and heard the evidence this day adduced, the arguments of counsel, and the charge of the court, and without leaving their seats say upon their oath that the defendant is guilty in manner and form as alleged in the declaration, and assess its damages at the sum of $6,273.32 over and above its costs and charges. It is therefore considered by the court that the said plaintiff do recover against the said defendant the said sum so assessed, together with its costs and charges to be taxed, and that it have execution therefor.

We think it very clear that after a verdict upon the issues presented by this record, the omission in the declaration to state the holding of the election and the occurrence of the other preliminary facts which the law required to precede the issuing of the bonds, cannot be regarded as error. It is a rule of the common law that where there is any defect or omission in a pleading, whether in substance or form, which would have been fatal on demurrer, yet, if the issue joined be such as necessarily required on the trial proof of the facts so defectively stated or omitted, and without which it is not to be presumed that the judge would have directed the jury to give the verdict, such defect or omission is cured. 1 Wms. Saund. 228. Or, as it has been tersely put, a verdict cures a defective statement of a title or cause of action, but not the statement of a defective title or cause of action. Id. 228 *c*, note. The declaration in this case states that the defendant, the township of Lincoln, acting under and in accordance with the authority conferred

by the act, made a certain donation to the railroad company, and for that purpose did make and execute the bonds in question; that the bonds were afterward duly delivered to the company as provided in the act; and that the plaintiff before maturity became the owner thereof for value. The defendant denied all this, and also set up special defences, that the transfer was fraudulent, that the road was never built as required before the delivery of the bonds, &c. Now if the township could only make the donation alleged by way of an election duly held, it was the duty of the court below to require proof of this fact, as well as of the other facts necessarily involved in the issue as made, and it will be presumed that this was done. What proof was sufficient for this purpose it is not necessary to decide, as no exception was taken on that point.

But we do not think that there was any defect in the declaration to be cured. We think that it would have been good on demurrer. The township had authority by law to issue its bonds by way of donation to a railroad. It did issue its bonds. They got into circulation as commercial securities, and were purchased by the plaintiff. All the plaintiff had to do in case of non-payment was simply to sue on the bonds. If there was any defence to them by reason of want of performance of any of the requisites necessary to give them validity, or for any other cause, it was for the defendant to show it. A bond, especially a negotiable bond, is a *prima facie* obligation of the obligor, if he has capacity to make it; and is binding according to the terms and conditions apparent on its face until the contrary be shown. Whether an alleged defence, when set up, is or is not good against the particular holder, is to be determined by the court in each case. How far, as against a *bona fide* holder, the obligor may, in any case, go behind the obligation itself, for the purpose of showing a failure to pursue the law authorizing its issue, is not yet, perhaps, clearly determined. Here the defendant township had opportunity to set up any defence. It denied all the averments of the declaration, and also gave notice of the non-performance of certain conditions to be performed by the railroad company preliminary to the issue of the bonds. The verdict was against the defendant, and no erroneous rulings at the trial are complained of. We

think that the declaration and proceedings as exhibited by the record are not obnoxious to any just exception.

The form of the verdict is defective, it is true, finding "that the defendant is guilty in manner and form as alleged in the declaration;" but this is a mere clerical error properly amendable. It substantially finds the issue made by the pleadings. The declaration was in assumpsit; the plea was a general denial of the allegations of the declaration, equivalent to a plea of *non assumpsit*, with notice of special matter. The verdict in effect says that the defendant did promise and violate its promise, as alleged in the declaration.

We think there is no error in the record.

Judgment affirmed.

WILSON *v.* GAINES.

1. A party who, under proceedings to enforce the statutory lien of the State of Tennessee, purchases a railroad does not acquire therewith the immunity from taxation thereon which the railroad company possessed.
2. Where the case stands on demurrer to his bill, which prays that the collection of taxes on the property be restrained, and avers that the sale was under those proceedings, this court will not, in the absence of a particular allegation to the contrary, presume that the sale embraced anything not covered by that lien.
3. *Morgan* v. *Louisiana* (93 U. S. 217) cited and approved.

ERROR to the Supreme Court of the State of Tennessee.

The facts are stated in the opinion of the court.

Mr. Edward Baxter, for the plaintiff in error.

No counsel appeared for the defendant in error.

MR. CHIEF JUSTICE WAITE delivered the opinion of the court.

This was a bill in equity filed in the Chancery Court of Nashville, Tenn., to enjoin the collection of taxes upon that part of the railroad of the St. Louis and Southwestern Railway Company which was originally owned by the Edgefield and Kentucky Railroad Company. The facts are these: —

On the 11th of December, 1845, the General Assembly of

Tennessee chartered the Nashville and Chattanooga Railroad Company for the purpose of building a railroad from Nashville to Chattanooga. The thirty-eighth section of that charter is as follows: —

"The capital stock of said company shall be forever exempt from taxation, and the road, with all its fixtures and appurtenances, including workshops, warehouses, and vehicles of transportation, shall be exempt from taxation for the period of twenty years from the completion of the road, and no longer."

On the 1st of January, 1852, the Nashville and Southern Railroad Company was incorporated to construct another line of road, and was to "have all the rights, powers, and privileges, and be subject to all the liabilities and restrictions, prescribed in the charter of the Nashville and Chattanooga Railroad Company," with a single exception, which is unimportant for any of the purposes of this case.

On the 13th of February, 1852, the Edgefield and Kentucky Railroad Company was incorporated to build a road from Nashville to the Kentucky State line, with the following as the sixth section of its charter: —

"That the company hereby incorporated is invested, for the purpose of making and using said road, with all the powers, rights, and privileges, and subject to all the liabilities and restrictions, that are conferred and imposed on the Nashville and Chattanooga Railroad Company by an act passed on the 11th of December, 1845, so far as the same are not inconsistent with the provisions of this act."

By an act of the General Assembly of the State passed Feb. 11, 1852, entitled "An Act to establish a system of internal improvement in this State," the governor was authorized to issue under circumstances therein mentioned to certain railroad companies the bonds of the State for the purpose of aiding in the completion of their respective roads; and it was further provided that upon such issue and the completion of the road the State should "be invested with a lien, without a deed from the company, upon the entire road, including the stock, right of way, grading, bridges, masonry, iron rails, spikes, chairs, and the whole superstructure and equipments, and all the property

owned by the company as incident to, or necessary for, its business, and all depots and depot stations, for the payment of all said bonds issued to said company as provided in this act, and for the interest accruing on said bonds." Acts of 1851–52, c. 151, sects. 1, 4, pp. 204–206. On the 8th of February, 1854, the privileges of this act were extended to the Edgefield and Kentucky Railroad Company. Acts of 1853–54, c. 131, sect. 1, p. 205.

Afterwards, on the 15th of December, 1855, the charter of the Edgefield and Kentucky company was amended, and the following is sect. 2 of that amendment: —

"That the said company shall be entitled to all the rights and privileges that were conferred upon the Nashville and Southern Railroad Company, by an act of the General Assembly of the State of Tennessee, passed Jan. 1, 1852, entitled 'An Act to charter the Nashville and Southern Railroad Company.'"

The company availed itself of the privileges of the internal improvement act, and subjected its property to the statutory lien therein provided for.

Default having been made by many of the railroad companies in meeting their obligations for the bonds of the State issued to them, several attempts were made to enforce the liens on some of the roads without success, and on the 22d of December, 1870, the legislature passed an act, sections 1 and 10 of which are as follows: —

"SECT. 1. That a bill shall be immediately filed in the Chancery Court at Nashville in the name and behalf of the State, to which all the delinquent companies, the respective stockholders, holders of the bonds, creditors, and all persons interested in the said several roads, shall be made parties defendant, and shall be brought before the court in the mode prescribed by the rules of practice in chancery established in the State, except as otherwise herein provided. And said court is hereby invested with exclusive jurisdiction to hear, adjudicate, and determine all questions of law and matters of controversy of whatever nature, whether of law or of fact, that have arisen or that may arise touching the rights and interest of the State, and also of the stockholders, bondholders, creditors, and others in said roads; and to make all such rules, orders, and decrees, interlocutory and final, as may be deemed necessary in

order to a final and proper adjustment of the rights of all the parties, preliminary to a sale of the interest of the State in said road. Also to declare the exact amount of indebtedness of each of said companies to the State; and likewise to define, as may be thought proper, what shall be the rights, duties, and liabilities of a purchaser of the State's interest in said roads, or either of them, and what shall be the reserved rights of said companies, stockholders, and others respectively, as against said purchasers after such sale, under the existing laws of this State."

"SECT. 10. That upon the sale of any of the franchises of either of the railroad companies by the commissioners under the provisions of this act, all the rights, privileges, and immunities appertaining to the franchise so sold under its act of incorporation and the amendments thereto, and the general improvement law of the State and acts amendatory thereof, shall be transferred to and vest in such purchaser, and the purchaser shall hold said franchise subject to all liens and liabilities in favor of the State, as now provided by law against the railroad companies."

The Edgefield and Kentucky company was one of the companies in default, and it is averred in the present bill that, "under a bill filed to foreclose the State's statutory lien upon the road and superstructure, equipments and stock, and the property owned by the company as incident to or necessary for its business, &c., . . . the road, its franchises, property, rights, privileges, immunities, &c., were sold," and the St. Louis and Southwestern company by sundry mesne conveyances was invested with the title. It is now contended that, under these circumstances, the road of the Edgefield and Kentucky company, in the hands of the St. Louis and Southwestern, is exempt from taxation until the expiration of twenty years from its completion. The Supreme Court of the State dismissed the bill, holding that the exemption from taxation which was granted to the Nashville and Chattanooga company was not one of the privileges of that company which passed to the Edgefield and Kentucky company, either by its original or amended charter. To reverse that decree the case has been brought here by writ of error.

In the view we take of this case, it is unnecessary to determine the question on which the decision seems to have turned in

the court below, for, as we think, it has not been shown that if the property in the hands of the original company was exempt from taxation, that exemption passed to the purchasers at the sale to foreclose the State's statutory lien under which the complainant claims. In *Morgan* v. *Louisiana* (93 U. S. 217) we distinctly held that immunity from taxation was a personal privilege and not transferable, except with the consent or under the authority of the legislature which granted the exemption, or some succeeding legislature, and that such an exemption does not necessarily attach to or run with the property after it passes from the owner in whose favor the exemption was granted. In that case the property in the hands of the original company was exempt from taxation. The company mortgaged its property and franchises, and under that mortgage the property and franchises were sold, pursuant to the terms of a judicial decree; but we held that by such a sale only such franchises passed as were necessary to the operation of the company, and without which its road and works would be of little value, and that consequently the property in the hands of the purchasers was subject to taxation.

In the present case the lien of the State was put by the statute only on the property of the company. It did not even in express terms include the franchises which were necessary to the operation of the road. Under such circumstances, if there were nothing more, it would seem to be clear beyond all question that a sale under the lien would not necessarily carry with it any immunity from taxation which the property enjoyed in the hands of the original company.

But it is contended that, as the case stands on demurrer to a bill which contains the distinct averment that "the road, its franchises, property, rights, privileges, immunities," &c., were sold, it must be assumed as an admitted fact that any immunity from taxation which the old company had, passed to the purchasers and their grantees. This averment must be taken in connection with the further equally distinct statement in the bill that the sale took place under proceedings instituted in the Chancery Court of Nashville "to foreclose the State's statutory lien," and as that lien was confined to the "property owned by the company, or incident to, or necessary for, its

business," we will not, in the absence of a particular and positive allegation to the contrary, presume that more was sold than the lien covered. Mere general words of description are not sufficient to extend a sale beyond the subject-matter of the lien, as defined by the statute which lies at the foundation of the entire proceeding.

We are told that a contrary doctrine is established by the case of *The Knoxville and Ohio Railroad Company* v. *Hicks*, decided by the Supreme Court of Tennessee at the September Term, 1877, and not yet reported, so far as we are advised, in any of the volumes of the regular series of the reports of the court. We do not so understand that case. There it was "distinctly adjudged," by the Chancery Court of Nashville in the proceedings to enforce the statutory lien under which the sale was made, "that not only the property of the old company, but all its rights, franchises, privileges, and immunities, as defined by the charter and laws, and the decree in the cause, passed to and vested in the new company," which was the purchaser. Nothing of the kind is found in this case. It is nowhere stated what the decree of the court was, but only what was sold; and inasmuch as the jurisdiction of the court was, by the terms of the act of 1870, expressly confined to an adjudication of matters of controversy "touching the rights and interest of the State, and also of stockholders, bondholders, creditors, and others in said roads," and to defining "what shall be the rights, duties, and liabilities of a purchaser of the State's interest in said roads, . . . and what shall be the reserved rights of said companies, stockholders, and others respectively, as against such purchasers after such sale, under the existing laws of the State," it would be against all the settled rules of construction to hold, upon the face of the statute alone, that more was sold than the lien to be adjudicated upon implied.

We are all of opinion, therefore, without deciding whether the property in the hands of the Edgefield and Kentucky Company was exempt, that the decree below dismissing the bill should be affirmed; and it is

So ordered.

SEVEN HICKORY v. ELLERY.

Under the Constitution of Illinois of 1848, a bill passed by both Houses of the legislature became a law when it was approved and signed by the governor of the State within ten days after its presentation to him; and this, notwithstanding the fact that, when the bill was so approved and signed, the legislature had adjourned *sine die*.

ERROR to the Circuit Court of the United States for the Southern District of Illinois.

This is an action by George B. Ellery against the town of Seven Hickory, Ill., to recover upon certain bonds issued by it March 1, 1872, which recite that they are issued "in pursuance of authority conferred by an act of the General Assembly of the State of Illinois, entitled 'An Act to incorporate the Tuscola, Charleston, and Vincennes Railroad Company,' approved March 7, 1867, and 'An Act to amend the foregoing act,' approved March 25, 1869, and of an election of the legal voters of the town of Seven Hickory, Ill., on the second day of April, 1867, under the provisions of said act of incorporation."

The defendant objected to the validity of the bonds on the ground that the General Assembly by which the bill for the act of March 7, 1867, was passed adjourned *sine die* Feb. 28, 1867, on which day the bill was presented to the governor, in whose hands it remained until March 7, when it was approved and signed by him and delivered to the secretary of state, in whose office it was filed, and thereupon published as a law of the State. The defendant also proved that after such adjournment there was no session of the General Assembly until June, 1867.

The court having overruled the objection, found the issues in favor of the plaintiff, and rendered judgment accordingly. The defendant sued out this writ of error.

Sect. 21, art. 4, of the Constitution of Illinois of 1848, is as follows: —

"Every bill which shall have passed the Senate and House of Representatives shall, before it becomes a law, be presented to the governor; if he approve, he shall sign it; but if not, he shall return it, with his objections, to the House in which it shall have origi-

nated; and the said House shall enter the objections at large on their journal, and proceed to reconsider it. If, after such reconsideration, a majority of the members elected shall agree to pass the bill, it shall be sent, together with the objections, to the other House, by which it shall likewise be reconsidered; and if approved by a majority of the members elected, it shall become a law, notwithstanding the objections of the governor; but in all such cases the votes of both Houses shall be determined by yeas and nays, to be entered on the journal of each House, respectively. If any bill shall not be returned by the governor within ten days (Sundays excepted) after it shall have been presented to him, the same shall be a law, in like manner as if he had signed it, unless the General Assembly shall, by their adjournment, prevent its return; in which case, the said bill shall be returned on the first day of the meeting of the General Assembly after the expiration of said ten days, or be a law."

Mr. John M. Palmer for the plaintiff in error.
Mr. D. T. McIntyre, contra.

MR. CHIEF JUSTICE WAITE delivered the opinion of the court.

The single question we have now to consider is whether a bill passed by both Houses, and presented to the governor before the legislature adjourns, becomes a law when signed by the governor after the session of the legislature has been terminated by an adjournment, but within ten days from its presentation to him. We have no hesitation in saying it does. There is certainly no express provision of the Constitution to the contrary. All that instrument requires is that, before any bill, which has passed the two Houses, can become a law, it shall be presented to the governor. If he approves it, he may sign it. If he does sign it within the time, the bill becomes a law. That is not said in so many words, but is manifestly implied. After a bill has been signed, the legislature has nothing more to do with it. Undoubtedly, if the legislature should be in session when the signing is done, it would not be inappropriate for the governor to communicate his approval to one or both the Houses; but there is nothing in the Constitution which requires him to do so. The filing of the bill by the governor in the office of the secretary of state with his signature of approval

on it is just as effectual in giving it validity as a law, as its formal return to the legislature would be. The bill becomes a law when signed. Everything done after that is with a view to preserving the evidence of its passage and approval.

The other parts of the article of the Constitution under consideration relate only to what is to be done if the governor fails to indicate his approval of the bill by signing it. If the legislature continues in session and he positively disapproves the bill, he may, within ten days from the time of its presentation to him, return it with his objections to the House in which it originated. Under such circumstances the bill cannot become a law until it has again passed both Houses, and this time by a majority of all the members elected. Such a second passage, if secured and entered on the journal, makes the bill a law notwithstanding its disapproval by the governor. If the governor remains passive, and neither signs nor returns the bill within ten days, the legislature being at the time in session, it becomes a law without his approval.

In this way provision is made for every case that can arise, except when the governor fails to sign the bill and the legislature adjourns for the session before the expiration of the ten days. To meet such a state of things it was provided that the governor might return the bill with his objections on the first day of the next session, and that, if he did not, the bill was *then* to become a law. If he did, the bill must again be passed over his objections as in case of a return before an adjournment and within the ten days. If thus passed it became a law, otherwise not. So that, under the Constitution of Illinois, if a bill is passed by both Houses of the legislature it becomes a law, — 1, when approved and signed by the governor within ten days after its presentation to him; 2, when the legislature being in session, the governor fails to sign the bill or return it with his objections to the House in which it originated within the ten days; 3, when, after being returned within the ten days, it is passed by the requisite majorities over his objections; 4, when, if the session of the legislature terminates by an adjournment before the expiration of the ten days, he fails to return the bill with his objections the first day of the next session; and, 5, when, having returned it with objections on the first day of the

next session, it is again passed by the requisite majorities in both Houses. And it becomes a law at the time when the event happens which is to give it validity. In the present case the bill was approved and signed within the ten days, and, therefore, as we think, it became a law from the date of the approval, notwithstanding the legislature was not in session at the time. This is in accordance with the ruling of the Court of Appeals of New York in *The People* v. *Bowen* (21 N. Y. 517); of the Supreme Court of Louisiana in *State, ex rel. Belden, Attorney-General*, v. *Fagan* (22 La. Ann. 545), and of the Supreme Court of Georgia in *Solomon* v. *Commissioners of Cartersville* (41 Ga. 157), upon provisions somewhat similar in the constitutions of those States. In the last case the decision was put on the ground that the practice of the governor had been to sign the bills within the limited time, whether the legislature was in session or not, but not afterwards. The bill of exceptions in the present case shows that the practice in Illinois has been to sign after the legislature had adjourned.

In every view of the case, we think the judgment below was right, and it is consequently

Affirmed.

133-510
139-6
4 680

RAILROAD COMPANY *v.* BALDWIN.

1. The grant which the act of July 23, 1866, c. 212 (14 Stat. 210), makes to the St. Joseph and Denver City Railroad Company, "to the extent of one hundred feet in width on each side of said road where it may pass through the public domain," is absolute and *in præsenti*, and a party subsequently acquiring a parcel of such lands takes it subject to that right.
2. *Quære*, Where Congress has conferred upon a railroad corporation, organized under the laws of a State, the right of way over the public lands in a Territory, can the State, subsequently created out of that Territory, prevent the corporation from enjoying that right.

ERROR to the Supreme Court of the State of Nebraska.

This was an action by Baldwin to recover of the St. Joseph and Denver City Railroad Company, or its successor in interest, damages for entering upon his land in Nebraska, and appropri-

ating, in the construction of its road, a strip two hundred feet in width and two hundred rods in length. The company claimed a right of way over the land of that width, under the act of Congress of July 23, 1866, c. 212, entitled "An Act for a grant of lands to the State of Kansas to aid in the construction of the Northern Kansas Railroad and Telegraph." 14 Stat. 210. The first section of the act, so far as it is material in this case, is as follows: —

"Be it enacted, &c., that there is hereby granted to the State of Kansas, for the use and benefit of the Saint Joseph and Denver City Railroad Company, the same being a corporation organized under the laws of the State of Kansas, to construct and operate a railroad from Elwood, in Kansas, westwardly, *via* Maryville, in the same State, so as to effect a junction with the Union Pacific Railroad, or any branch thereof, not farther west than the one hundredth meridian of west longitude, every alternate section of land designated by odd numbers, for ten sections in width on each side of said road, to the point of intersection. But in case it shall appear that the United States have, when the line or route of said road is definitely fixed, sold any section, or any part thereof, granted as aforesaid, or that the right of pre-emption or homestead settlement has attached to the same, or that the same has been reserved by the United States for any purpose whatever, then it shall be the duty of the Secretary of the Interior to cause to be selected for the purposes aforesaid, from the public lands of the United States nearest to tiers of sections above specified, so much land in alternate sections, or parts of sections designated by odd numbers as shall be equal to such lands as the United States have sold, reserved, or otherwise appropriated, or to which the rights of pre-emption of homestead settlements have attached as aforesaid, which lands, thus indicated by odd numbers and selected by direction of the Secretary of the Interior as aforesaid, shall be held by the State of Kansas for the use and purpose aforesaid."

The fourth section is as follows: —

"That as soon as the said company shall file with the Secretary of the Interior maps of its line designating the route thereof, it shall be the duty of the said Secretary to withdraw from the market the lands granted by this act in such manner as may be best calculated to effect the purposes of this act and subserve the public interest."

The sixth section is as follows: —

"That the right of way through the public lands be, and the same is hereby, granted to said Saint Joseph and Denver City Railroad Company, its successors and assigns, for the construction of a railroad as proposed, and the right is hereby given to said corporation to take from the public lands adjacent to the line of said road, material for the construction thereof. Said way is granted to said railroad to the extent of one hundred feet in width on each side of said road where it may pass through the public domain; also, all necessary ground for station buildings, workshops, depots, machine-shops, switches, side-tracks, turn-tables, and water-stations."

When the grant was made by Congress, the land claimed by Baldwin was vacant and unoccupied land of the United States. But the line of the road over it was not definitely located until October, 1871. He acquired whatever rights he possesses in October, 1869. The defendant contends that the plaintiff took the land subject to its right of way. He contends that the grant of the right of way took effect only from the date at which the company filed its maps designating the route with the Secretary of the Interior. The District Court of the State agreed with him and gave judgment in his favor. The Supreme Court affirmed it, and to review it the cause is brought here.

Mr. John F. Dillon for the plaintiff in error.
Mr. E. E. Brown, contra.

MR. JUSTICE FIELD, after stating the case, delivered the opinion of the court.

The act of Congress of July 23, 1866, c. 212, makes two distinct grants: one of lands to the State of Kansas for the benefit of the St. Joseph and Denver City Railroad Company in the construction of a railroad from Elwood in that State to its junction with the Union Pacific *via* Maryville; the other of a right of way directly to the company itself. The lands consisted of alternate sections, designated by odd numbers, on each side of the line of the proposed road. The grant of them was subject to the condition that if, at the time the line of the road was definitely fixed, the United States had sold any section or a part thereof, or the right of pre-emption or homestead set-

tlement had attached to it, or the same had been otherwise reserved by the United States for any purpose, the Secretary of the Interior should select an equal quantity of other lands nearest the sections designated, in lieu of those appropriated, which should be held by the State for the same purposes. The limitations upon the grant are similar to those found in numerous other grants of land made by Congress in aid of railroads. Their object is obvious. The sections granted could be ascertained only when the routes were definitely located. This might take years, the time depending somewhat upon the length of the proposed road and the difficulties of ascertaining the most favorable route. It was not for the interest of the country that in the mean time any portions of the public lands should be withheld from settlement or use because they might, perhaps, when the route was surveyed, fall within the limits of a grant. Congress, therefore, adopted the policy of keeping the public lands open to occupation and pre-emption, and appropriation to public uses, notwithstanding any grant it might make, until the lands granted were ascertained, and providing that if any sections settled upon or reserved were then found to fall within the limits of the grant, other land in their place should be selected. Thus settlements on the public lands were encouraged without the aid intended for the construction of the roads being thereby impaired. The language of the act here, and of nearly all the congressional acts granting lands, is in terms of a grant *in præsenti*. The act is a present grant, except so far as its immediate operation is affected by the limitations mentioned. "There is hereby granted" are the words used, and they import an immediate transfer of interest, so that when the route is definitely fixed the title attaches from the date of the act to the sections, except such as are taken from its operation by the clauses mentioned. This is the construction given by this court to similar language in other acts of Congress. *Missouri, Kansas, & Texas Railway Co.* v. *Kansas Pacific Railway Co.*, 97 U. S. 491; *Leavenworth, Lawrence, & Galveston Railroad Co.* v. *United States*, 92 id. 733.

But the grant of the right of way by the sixth section contains no reservations or exceptions. It is a present absolute grant, subject to no conditions except those necessarily im-

plied, such as that the road shall be constructed and used for the purposes designed. Nor is there anything in the policy of the government with respect to the public lands which would call for any qualification of the terms. Those lands would not be the less valuable for settlement by a road running through them. On the contrary, their value would be greatly enhanced thereby.

The right of way for the whole distance of the proposed route was a very important part of the aid given. If the company could be compelled to purchase its way over any section that might be occupied in advance of its location, very serious obstacles would be often imposed to the progress of the road. For any loss of lands by settlement or reservation, other lands are given; but for the loss of the right of way by these means, no compensation is provided, nor could any be given by the substitution of another route.

The uncertainty as to the ultimate location of the line of the road is recognized throughout the act, and where any qualification is intended in the operation of the grant of lands, from this circumstance, it is designated. Had a similar qualification upon the absolute grant of the right of way been intended, it can hardly be doubted that it would have been expressed. The fact that none is expressed is conclusive that none exists.

We see no reason, therefore, for not giving to the words of present grant with respect to the right of way the same construction which we should be compelled to give, according to our repeated decisions, to the grant of lands had no limitation been expressed. We are of opinion, therefore, that all persons acquiring any portion of the public lands, after the passage of the act in question, took the same subject to the right of way conferred by it for the proposed road.

The fact that the right of way over land in Nebraska was granted to a corporation in Kansas does not alter the case. Nebraska was at the time a Territory of the United States, and it was entirely competent for Congress to confer upon any corporation of a State a right of way for a railroad to be constructed by it through the lands of the United States situated in that Territory. And in February, 1869, after the Territory

had become a State, its legislature, by an express enactment, authorized railroad companies organized under the laws of Kansas, Missouri, or Iowa to extend and build their roads into the State, and declared that, upon complying with certain conditions, they should possess all the powers, franchises, and privileges of railroad companies incorporated under its laws. It is not shown that the company here has not complied with the prescribed conditions, even if such an objection could be raised by any other party than the State itself. But independently of this consideration, where Congress has conferred upon a railroad corporation of a State a right of way over the public lands of the United States in any one of their Territories, it may be doubted whether the State subsequently created out of the Territory could prevent the enjoyment by such corporation of the right conferred. It could do so only on the same terms that it could refuse a recognition of its own previously granted right, for in such matters the State would succeed only to the authority of Congress over the Territory.

The judgment of the Supreme Court of Nebraska must, therefore, be reversed, and the cause be remanded to it with directions that further proceedings be had in accordance with this opinion; and it is

So ordered.

MR. CHIEF JUSTICE WAITE dissented.

FISK v. ARTHUR.

1. In 1873, A. imported certain manufactured shirtings, not made up, composed of linen and cotton, the latter being the material of chief value and largely predominating. *Held*, that they were, within the meaning of the tariff acts, manufactures of cotton, and, as such, subject to the duty imposed by the first section of the act of March 3, 1865, c. 80. 13 Stat. 491.
2. The ruling in *Solomon* v. *Arthur* (102 U. S. 208), that goods made of mixed materials were not dutiable under the mixed-material clause of the twenty-second section of the act of March 2, 1861, c. 192 (12 Stat. 192), if they came properly within any other description found in the tariff acts, reaffirmed.

ERROR to the Circuit Court of the United States for the Southern District of New York.

The facts are stated in the opinion of the court.

Mr. Stephen G. Clarke for the plaintiff in error.

The *Solicitor-General, contra.*

MR. CHIEF JUSTICE WAITE delivered the opinion of the court.

This is a suit to recover back duties paid under protest. The goods imported were manufactured shirtings, not made up, composed of linen and cotton; the cotton being the material of chief value and largely predominating. There were more than two hundred threads to the square inch, counting the warp and filling.

The act of March 2, 1861, c. 68, sect. 22 (12 Stat. 192), provided for a duty of thirty per cent *ad valorem* on "manufactures not otherwise provided for, composed of mixed materials, in part of cotton, silk, wool or worsted, or flax." The same act, sect. 14, provided for specific duties on all manufactures of cotton not bleached, &c., having certain numbers of threads to the square inch, counting the warp and filling and being of certain weights. An addition was made to the duties on manufactures of mixed materials by the act of July 14, 1862, c. 163, sect. 13. Id. 557. By the act of June 27, 1864, c. 171, sect. 6 (13 id. 208), the duties on manufactured cottons, as provided in the act of 1861, were to some extent changed and a general clause added at the end of the section as follows: "All other manufactures of cotton, not otherwise provided for, thirty-five per centum *ad valorem*." On the 3d of March, 1865, c. 80, sect. 1 (id. 491), the rates of duty on manufactures of cotton dependent on the weight and the number of threads to the square inch were somewhat changed.

By the act of April 30, 1842, c. 270, sect. 20 (5 id. 565), now sect. 2499 of the Revised Statutes, it was provided that there should be levied and collected on each and every non-enumerated article which bears a similitude, either in material, quality, texture, or the use to which it may be applied, to any enumerated article chargeable with duty, the same rate of duty which is levied and charged on the enumerated article it most resem-

bles in any of the above particulars; and if any non-enumerated article equally resembles two or more enumerated articles, on which different rates of duty are chargeable, it shall pay the highest rate, and on all articles manufactured from two or more materials the duty shall be assessed at the highest rate chargeable on any of its component parts.

The collector in this case demanded and collected the duties at the rates chargeable on manufactures of cotton exceeding two hundred threads to the square inch, while the importer claimed the goods were dutiable under the acts of 1861 and 1862, as composed of mixed materials. The suit was brought to recover back the excess charged by the collector, and on the trial the court instructed the jury on the conceded facts to bring in a verdict for the defendant. This instruction is assigned for error here.

We decided in *Solomon* v. *Arthur* (102 U. S. 208) that the mixed-material clause of the act of 1861 was descriptive rather than denominative, and that because goods were made of mixed materials they were not necessarily stamped with the name of mixed goods. Consequently goods made of mixed materials were not dutiable under that clause if they came properly within any other description found in the tariff acts. The act of 1864 provides for all manufactures of cotton, so that the question here is, whether these goods are essentially of that character. If they are, they are not dutiable under the mixed-material clause.

In *Stuart* v. *Maxwell* (16 How. 150), it was held that the act of 1842 brought goods made of linen and cotton within the provision of the tariff act of 1846, c. 74, sect. 11 (9 Stat. 46), sched. D, which imposed a duty on "manufactures composed wholly of cotton, not otherwise provided for." It was conceded that manufactures of cotton and linen were not enumerated in the act of 1846, but we said that, "By providing for the principal thing, it has provided for all other things which the law declares to be the same. It is only upon this ground that sheer and manifest evasions can be reached. Suppose an article is designedly made to serve the uses and take the place of some article described, but some trifling or colorable change is made in the fabric or some of its incidents. It is new in the market.

No man can say he has ever seen it before, or known it under any commercial name. But it is substantially like a known article which is provided for. The law of 1842 then declares that it is to be deemed the same and to be charged accordingly." The effect of this is to hold that such an article "is provided for under the name of what it resembles." Here, all manufactures of cotton are provided for in the act of 1864 and its amendments, and the article now in question, in material, quality, and texture, as well as the use to which it is to be applied, is precisely like cotton shirtings. As cotton largely predominates, we think the burden was cast on the importer to show that the change was substantial and not for the purpose of evading the requirements of the law. It is not pretended that the new article had acquired any distinctive name in commerce, or that it was in any material respect different from similar goods manufactured entirely of cotton. The only difference between this case and that of *Stuart* v. *Maxwell* is that here it is claimed the articles are enumerated as mixed goods, while there that they were not enumerated at all. There it was held that they were not non-enumerated because they were substantially cotton goods, and here we think for the same reason they are not mixed goods. They are substantially, and, therefore, within the meaning of the tariff acts, actually manufactures of cotton. Linen has been used to a limited extent, not to make goods of "mixed materials," but to make "manufactures of cotton" more useful for some purposes. To hold, upon the facts as they are admitted to be, that these goods were something radically different from cotton shirtings, would be to encourage evasions of the descriptive terms in the tariff laws, "by some trifling or colorable change in the fabric, or some of its incidents." This we are not inclined to do.

Judgment affirmed.

INSURANCE COMPANY v. BANGS.

1. Where a suit is brought, not to enforce a claim or lien upon property, but to cancel a purely personal contract, the Circuit Court cannot acquire jurisdiction of the defendant unless he appear or there be personal service of process upon him within the district. If he is an infant, the decree against him is void on its face, the record showing affirmatively the non-service of process, although a guardian *ad litem* was appointed for him in his absence.
2. The necessity for such service on the infant is not obviated by the State statute requiring his general guardian "to appear for and represent his ward in all legal suits and proceedings, unless when another person is appointed for the purpose as guardian or next friend."

ERROR to the Circuit Court of the United States for the District of Minnesota.

This was an action on two policies of insurance upon the life of James H. Bangs, each for $5,000, issued on the 22d of November, 1875, by the New York Life Insurance Company, and made payable to the plaintiff. It was originally commenced in a court of the State of Minnesota, and was removed to the Circuit Court of the United States on the petition of the company, averring that he was a citizen of Minnesota, and that the company was a corporation created under the laws of New York. To the complaint the company answered, and, in addition to a general denial of its allegations, set up that the insured had committed suicide by voluntarily taking poison with the intention of producing death; and when the policies were applied for and obtained, he was represented to the company to be in sound health, correct in habits, to have every prospect of a long life, and to be a person who fully intended to live as long as possible in the course of nature; that the company relied upon these representations, and believed them to be true, and would not otherwise have accepted the risks and issued the policies, or either of them; but that, nevertheless, the representations were false and fraudulent, and, at the time they were made and the policies applied for and obtained, the insured intended to take his life within a short period, and thereby to defraud the company out of the amount of insurance, and that in execution of this fraudulent purpose he took his life. The action was commenced in June, 1876, and in

July following the order for its removal was made; but the proceedings were not, in fact, transferred until the subsequent December, when the answer was filed. Nothing further was done in the case until June, 1877, when the company obtained leave to file a supplemental answer setting up a decree which, during that month, it had recovered against the plaintiff in the Circuit Court of the United States for the District of Michigan. It appears that in March, 1876, the company had commenced a suit in equity, in that court, against the plaintiff here and his mother, to obtain a cancellation of the policies of insurance and an injunction against instituting or prosecuting any action at law upon them. The bill averred — what is substantially stated in the answer above, but with much greater detail — that the insured obtained the policies with the intention, at the time, of taking his life soon afterwards, and thereby defrauding the company out of the amount of the insurance, and that he carried out this intention by taking poison, which caused his death. The supplemental answer, after setting forth the institution of the suit, averred that subpœnas were issued and served upon the defendants; that Edson C. Bangs, the son of the insured, to whom the policies were payable, being a minor, one Henry A. Harmon was appointed by the court guardian *ad litem* for him; that by this guardian he filed an answer denying that the death of the insured was caused by poison, or that the policies were obtained for the purpose of defrauding the company, or that death was effected in pursuance of any such fraudulent design, and all allegations of fraud in the bill; that afterwards proofs were taken and a decree was rendered therein adjudging the policies to be void and ordering their cancellation, and perpetually enjoining the defendants from instituting and carrying on any action at law upon them.

An exemplified copy of the record was annexed to and made part of the supplemental answer. To this answer the plaintiff demurred, on the ground, among other things, that the proceedings of the Circuit Court of the United States were void, in that it appeared from the record that the court never had jurisdiction of the person of Edson C. Bangs, the plaintiff here, and no jurisdiction in equity over the action under the circumstances mentioned. The demurrer was sustained, and subse-

quently the defendant obtained leave to withdraw the original answer, so as to rest its defence upon the supplemental answer and the matters therein pleaded. Judgment was accordingly rendered for the plaintiff for the amount claimed, and to review that judgment the case is brought to this court on writ of error.

The record of the equity suit in Michigan showed on its face that the subpœna issued in it was never personally served upon the defendant, Edson C. Bangs, the plaintiff in this action; that it was only served on his general guardian after he, Bangs, had left the State and gone to Minnesota to reside; that upon the affidavit of the complainant's solicitor, stating that the subpœna and injunction in the case had been a week in the hands of the marshal, who reported that he could not find the defendants in his district, that they had locked up the house where they resided and had temporarily left the State, and that he was unable to find any one in charge of the house, the court made an order declaring that the service of the subpœna and injunction on the general guardian was a good service upon the infant; that afterwards the general guardian was appointed guardian *ad litem* for him, but not making any appearance for him, and not intending to submit the rights of the infant to the adjudication of the court, his appointment was revoked, and Henry A. Harmon was substituted as such guardian *ad litem* in his place, and that he subsequently acted in the case in that capacity for the infant.

Mr. Herbert L. Baker and *Mr. William A. Maury* for the plaintiff in error.

Mr. Mark S. Brewer, contra.

MR. JUSTICE FIELD, after stating the case, delivered the opinion of the court.

As seen from the statement of the case, the only matter for our consideration relates to the validity of the decree of the Circuit Court of the United States for the District of Michigan, and that depends upon the solution of the question whether the court had jurisdiction of the person of the infant, Edson C. Bangs, the plaintiff here, and of the subject-matter of the suit upon which it acted.

From the view we take of the case, it will only be necessary to examine the proceedings to see whether the infant was ever brought before the court so as to justify the appointment of a guardian *ad litem* for him. The general authority of courts of equity over the persons and estates of infants, upon which counsel have so much dwelt, is not questioned. It may be exerted, upon proper application, for the protection of both. This jurisdiction in the English courts of chancery is supposed to have originated in the prerogative of the crown, arising from its general duty as *parens patriæ* to protect persons who have no other rightful protector. But partaking, says Story, as the prerogative does, more of the nature of a judicial administration of rights and duties *in foro conscientiæ* than of a strict executive authority, it was very naturally exercised by the Court of Chancery as a branch of its original general jurisdiction. "Accordingly," he adds, "the doctrine now commonly maintained is that the general superintendence and protective jurisdiction of the Court of Chancery over the persons and property of infants is a delegation of the rights and duty of the crown; that it belonged to that court, and was exercised by it from its first establishment; and that this general jurisdiction was not even suspended by the statute of Henry VIII., erecting the court of wards and liveries." The jurisdiction possessed by the English courts of chancery from this supposed delegation of the authority of the crown as *parens patriæ* is more frequently exercised in this country by the courts of the States than by the courts of the United States. It is the State and not the Federal government, except in the Territories and the District of Columbia, which stands, with reference to the persons and property of infants, in the situation of *parens patriæ*. Accordingly provision is made by law in all the States for the appointment of such guardians, whose duties and powers are carefully defined. The authority of the Federal courts can only be invoked within the limits of a State for such an appointment where property of the infant is involved in legal proceedings before them, and needs the care and supervision of an officer of that kind. In such a case, to preserve the property from destruction or waste, the Federal courts may appoint a guardian to take care of it pending the proceedings. And those courts

will always see that a proper guardian *ad litem* has charge of the infant's interests where his property is involved in proceedings before them. This is the extent of their authority. Nothing is gained, therefore, in this case by reference to the general power of courts of equity over the persons and property of infants. The infant Bangs possessed no property in Michigan when the suit in equity was commenced against him. That suit did not concern any property, real or personal. It was brought to cancel a contract made with his father, and any decree respecting it would necessarily have been *coram non judice*, unless the parties interested were before the court upon the service of a subpœna or their voluntary appearance. The infant, being absent from the State, could not be personally served.

The statute of Michigan requiring the general guardian of an infant to "appear for and represent his ward in all legal suits and proceedings unless when another person is appointed for the purpose as guardian or next friend" does not change the necessity of service of process upon the defendants in a case before a court of the United States where a personal contract alone is involved. It may be otherwise in the State courts; it may be that, by their practice, the service of process upon the general guardian, or his appearance without service, is deemed sufficient for their jurisdiction. We believe that in some States such is the fact; but the State law cannot determine for the Federal courts what shall be deemed sufficient service of process or sufficient appearance of parties. Substituted service, by publication, against non-resident or absent parties, allowed in some States in purely personal actions, is not permitted in the Federal courts. Such service can only be resorted to where some claim or lien upon real or personal property is sought to be enforced, and the decision of the court will then only affect property of the party within the district. Rev. Stat., sect. 738.

In all cases brought to enforce or cancel personal contracts, or to recover damages for their violation, the statute requires a personal service of process upon the defendants, or their voluntary appearance. And the equity rules qualify the statute only so far as to allow, in cases of husband and wife, a copy of the subpœna to be delivered to the husband, and in other cases a

copy to be left at the dwelling-house, or usual place of abode of the defendant, with some person who is a member of or resident in the family. In either mode, the defendant is to be served within the district, and until such service or his appearance, the court has no jurisdiction to proceed or to render a decree affecting his rights or interest. There being here no property of the infant defendant within the district of Michigan, which the court could lay hold of, — and he being absent from it, — there was no foundation laid for any progress by the court in the case. It never acquired jurisdiction over the infant; it could, therefore, appoint no guardian *ad litem* for him, and the decree rendered against him was ineffectual for any purpose.

Our attention has been called to several cases of the State courts, in which it has been held that a decree or judgment could not be collaterally attacked, though rendered in a case where a guardian *ad litem* had been appointed without service of process on the infant. Such are the cases of *Preston* v. *Dunn*, 25 Ala. 507; *Robb* v. *Lessee of Irwin*, 15 Ohio, 689; and *Gronfier* v. *Puymirol*, 19 Cal. 629. All of them are illustrative of the position we have stated; they all relate to the interest of the infant in real property in the State.

In *Preston* v. *Dunn*, the bill was filed by an infant, suing by his next friend, to redeem a tract of land which had once belonged to his father, who had mortgaged it, and which had been sold under judicial decree in a foreclosure suit and purchased by the defendant. The father having died pending the foreclosure suit, and a posthumous child to him having been born, a bill of revivor was filed against the administrator and administratrix of his estate, and his infant son. A subpœna was served on the adult defendants, and a guardian *ad litem* was appointed by the court for the infant, who appeared for him. It was held by the Supreme Court of Alabama that the decree rendered upon such appearance was irregular, but not void, and that it could not be attacked collaterally.

In *Robb* v. *Lessee of Irwin*, it appeared that a guardian *ad litem* for infant heirs had been appointed in a proceeding for the sale of certain real property in which they were interested. In an action of ejectment subsequently brought by the heirs, it was held by the Supreme Court of Ohio that the proceeding

was not vitiated by the appointment of the guardian *ad litem*, without previous service of process on the infant.

In *Gronfier* v. *Puymirol*, a general guardian of the estate of non-resident infants had been appointed by the Probate Court upon the representation that they were interested in certain real property in the State. In proceedings for a sale of such property, the general guardian appeared for the infants without being appointed guardian *ad litem* for them, and it was held by the Supreme Court of California, that the court had jurisdiction to order the sale and that it passed a good title; and that under the practice of the State a general guardian could appear in legal proceedings for his ward when a guardian *ad litem* was not appointed by the court.

There is nothing in these cases which at all conflicts with the views we have expressed as to the jurisdiction of the Circuit Court for the District of Michigan in appointing a guardian *ad litem* for a non-resident or absent infant, in a case which did not touch any property in the district, but was brought to cancel a personal contract.

There are, also, some cases in the State courts, in which a judgment upon a personal demand has been sustained against collateral attack, though rendered in an action where a guardian *ad litem* had been appointed without previous service of process upon the infant; but they are exceptional, and there has generally been in them some circumstance which rendered any disturbance of the judgment likely to lead to great hardship and injustice. Such is the case of *Bustard* v. *Gates and Wife*, 4 Dana (Ky.), 429. There an ejectment was brought for land more than twenty years after it had been sold, and which during the interval had greatly increased in value. But in none of the cases to which our attention has been called has a judgment been upheld where a guardian *ad litem* had been appointed for a non-resident infant against whom a purely personal demand was prosecuted. If such a case exists, the judgment in it can have no greater force than one rendered for a personal demand against a non-resident upon any other form of constructive service; and that constructive service will not give jurisdiction in such cases is the established doctrine of this court. *Pennoyer* v. *Neff*, 95 U. S. 714.

Judgment affirmed.

TERRY v. MCLURE.

1. Eight years after a bill in equity had been filed, and on the day it was dismissed, on a final hearing upon the pleadings and proofs, an amended bill was filed without leave. *Held*, that it must be disregarded in the consideration of the case here.
2. The Statute of Limitations is a bar to a suit brought four years after a bank in South Carolina had permanently suspended specie payments, by a holder of its notes to enforce the individual liability of the stockholders.
3. *Carrol* v. *Green* (92 U. S. 509) and *Godfrey* v. *Terry* (97 id. 171) cited and approved.

APPEAL from the Circuit Court of the United States for the District of South Carolina.

The facts are stated in the opinion of the court.

Mr. Harvey Terry for the appellant.
Mr. James Lowndes and *Mr. William E. Earl*, *contra.*

MR. JUSTICE MILLER delivered the opinion of the court.

This was a suit in chancery brought by Terry against McLure, as receiver of the Bank of Chester, certain officers of the bank, and one or two of its stockholders. Its main purpose was to obtain a discovery of the names of the stockholders at the date of the failure of the bank, in order to make them, when discovered, liable for the amount of the circulating notes of the bank held by the complainant. It would be a useless task to trace here the interminable amendments to the original bill, none of which varied essentially its character, though some of the later ones attempted to set up fraud in the stockholders in receiving dividends declared and paid on their stock while the bank, as he alleged, was in a state of insolvency. It is enough to say of all these amendments, except the last, that no sufficient statement of the names of the stockholders who received such dividends, and of the amounts received by each, or of the circumstances under which they were declared or received, is found, whereon to charge any one stockholder.

This amended bill gives the names of a large number of stockholders, with a statement of the sum received by each, and is full of the general allegations that the money so received was a trust fund that should have been applied to the payment

of the debts of the bank, but was diverted from its proper use to the payment of dividends.

This amended bill, however, was filed on the sixth day of May, 1878, which was eight years after the original bill was filed. It does not appear that any leave of the court was obtained to file it, though some four or five other amended bills show in every instance that they were filed with the leave of the court. It is a fair inference that what counsel on the other side say in their briefs is true, namely, that it was filed without leave and was disregarded by the court. In fact, the record shows that the original bill was dismissed on its merits after hearing on the pleadings, testimony, and argument of counsel, on the same day that this last amended bill was filed. Whether before or after the decree of the court was rendered is not shown. Nor is it material, as it must be understood that however it got to be filed in court it was done without consent of the court or of counsel for the defendants. It must be disregarded, therefore, in the consideration of the case here.

As regards the statutory liability of the stockholders, the allegations of the bill, the answers of the defendants, and the evidence taken in the case all show that the suspension of specie payments took place on the twenty-seventh day of November, 1860, and that the statute of limitations of four years of the State of South Carolina, applicable to such cases, bars the complainant's right of recovery.

This point was adjudged in this court against the present complainant in *Godfrey* v. *Terry*, 97 U. S. 171. See also *Carrol* v. *Green*, 92 id. 509.

The decree of the Circuit Court is, therefore,

Affirmed.

JONES v. WALKER.

1. The last will and testament of A. directs that his interest in a firm, whereof he was a member at the time of his death, "be continued therein, and be chargeable for its debts and liabilities," but that his "other property shall not be so chargeable." *Held*, that the general assets of his estate are not bound for the debts of the firm which were contracted subsequently to his death.
2. The profits arising from that interest were, pursuant to the will, paid from time to time, the firm being then free from debt, and its capital undiminished. It afterwards became bankrupt. *Held*, that the legatees receiving them were not liable to the assignee in bankruptcy therefor.

APPEAL from the Circuit Court of the United States for the District of Kentucky.

The facts are stated in the opinion of the court.

Mr. Martin Bijur and *Mr. W. O. Dodd* for the appellant.
Mr. John Mason Brown, contra.

MR. JUSTICE MILLER delivered the opinion of the court.

W. H. Walker, who was a large dealer in liquors in partnership with his son Frederick, made his will in July, 1870. One of the clauses of the will provided for the continuance of the partnership and the conduct of this business after his death.

It is in this language: —

"It is my wish that my son Frederick carry on the business of W. H. Walker & Co. in that name and style, and in my storehouse where it is now carried on, giving him power to change the place until my youngest child living to be twenty-one years of age arrives at that age, or for a shorter time, if he does not find it profitable. To that end all my capital and interest in said concern shall be continued therein, and shall be chargeable for its debts and liabilities; but my other property shall not be so chargeable while Frederick carries on said business; my share shall pay the salary of an efficient man to aid him therein, or he shall have compensation for his services as to and from my share. Agents and employés of the concern are to be paid by it. Frederick is not to be charged with five thousand dollars advanced by me to him on his coming of age,

and he is to have the privilege to purchase, at a fair valuation and upon reasonable time, such portion of my share in said concern and its good-will as will make his share equal to one-half. What he may so pay is to be divided as profits of the concern. While my storehouse is occupied by the concern it shall pay rent therefor. The profits of said concern, which shall be ascertained and declared in the first of January after my death, and annually thereafter, shall be divided between my wife and children, or their descendants, and others. As my personalty is to be divided among them when my youngest child living to be twenty-one years of age arrives at that age, or at the death of my son Frederick before that time, or when he discontinues the business, my interest in the concern and its good-will shall be sold as my executors may direct, and the proceeds divided, as the profits thereof are to be divided, with an obligation, if possible, that the business may be carried on under the old name and style."

The testator died in 1872, and the business was conducted as directed in the will until Feb. 27, 1877, when the firm, on the petition of its members, was declared bankrupt by the proper court.

The appellant Jones was made assignee, and very shortly afterwards filed the bill in the present case against the devisees of W. H. Walker's will.

The object of the bill is twofold, namely, to subject the property of the deceased, which had not been embarked in the partnership enterprise, in the hands of the devisees, to the payment of the partnership debts, and to recover from the defendants money which they had received as dividends out of the profits of the business after the death of the testator.

In the recent case of *Smith* v. *Ayres* (101 U. S. 320), the legal principle lying at the foundation of the first of these grounds of relief was fully discussed and determined. It was there held that a testator might authorize the continuance of a partnership, in which he was engaged at the time of his death, without subjecting any more of his property to the vicissitudes of the business than what was then embarked in it, and that, unless he had expressly placed the whole, or some other part of his estate, under the operation of the partnership, it would not

be presumed that he had so intended. See also *Burwell* v. *Mandeville's Executor*, 2 How. 560; *Ex parte Garland*, 10 Ves. Jr. 109. In the case before us the testator declares, in express terms, that his capital and interest in said concern shall be continued therein, and shall be chargeable for its debts and liabilities; but his other property shall not be so chargeable.

We see no reason in the present case for departing from the principle adopted in *Smith* v. *Ayres* after much consideration.

If dividends of profits out of the partnership business were honestly and fairly made, and when paid did not diminish the capital, nor withdraw what was necessary to pay the indebtedness of the concern, we see no reason why the persons receiving them should now be called on to refund them.

The will of the testator has a clause authorizing these dividends. The partnership had a long time to run and a large part of his capital was engaged in the business. There were children to be reared and educated, and it would have been very unreasonable that all the profits should be continually converted into capital, and that neither these children, nor Frederick, the other partner, should be permitted to receive dividends of profits, except on the condition of a liability to that extent for any future transactions of the partnership through a period of fifteen or twenty years.

If these dividends had not been declared in good faith, nor really earned, if they had diminished the capital, or if, when they were made, debts existed which would have been left without means of payment, the persons sharing in the dividends would probably have been liable to these creditors to the extent of the money so received.

But we are satisfied that none of these conditions existed.

The case is mainly one of fact, and the testimony is very full. We do not think its discussion here profitable or useful. We are satisfied that at the time the last dividend was made the capital of the company was undiminished, and the firm amply able to pay its debts. Its misfortunes followed after this.

It very fully appears that the insolvency was brought about

by accommodation indorsements for others, made after the last dividend was paid; that the firm, but for this, would have remained solvent, and that, in regard to this, none of the de fendants were to blame except Frederick, who, being a full partner, is liable personally for all the debts of the firm.

An important matter in the case is a stipulation of the parties to the suit that all the debts owing by the firm were contracted subsequently to the declaration and payment of all the dividends, and none of the debts of the firm were in existence at the time these profits were declared and paid.

No creditor whose debt was in existence when these dividends were made was injured. All the debts then existing have been paid. What right had subsequent creditors to reclaim these dividends, who had no interest in the matter when they were paid? These defendants, except Frederick, were not partners. Their money was in the concern, and they received dividends instead of interest.

We repeat that there is no evidence of fraud or intentional wrong.

Decree affirmed.

UNITY v. BURRAGE.

1. A statute was declared to be a public act. A subsequent statute, supplementary thereto and amendatory thereof, is also a public act, and need not be specially pleaded.
2. A statute of Illinois, legalizing elections held by the voters of a county on the question of issuing negotiable bonds of the county, in aid of certain railroad companies, and authorizing, on conditions therein named, all the townships in counties where the township organization had been adopted, lying on or near to the line of a specified railroad, to subscribe to the stock of the railroad company, and issue negotiable bonds therefor, is a public act.
3. Such a statute does not conflict with section 23 of article 8 of the Constitution of 1848, which provides that "no private or local law, which may be passed by the General Assembly, shall embrace more than one subject, and that shall be expressed in the title."

ERROR to the Circuit Court of the United States for the Southern District of Illinois.

On Feb. 8, 1853, an act of the legislature of Illinois was approved, entitled an act to incorporate "the Decatur and Indianapolis Railroad Company." It incorporated the company named for the purpose of "constructing, completing, and operating a railroad from the town of Decatur, in Marion County, in the State of Illinois, and thence in a direct line, upon the most eligible route, to the east line of the State of Illinois."

The third section of the act is as follows: —

"Said company is hereby authorized and empowered to unite and form a junction with the Indiana and Illinois Central Railway Company, or any other company which is or may hereafter be organized in the State of Indiana terminating on said line; and also, to unite and consolidate with the said Indiana and Illinois Central Railway Company, upon such terms and conditions as the directors shall mutually agree upon; and in the event that said companies shall consolidate, then and in that case there shall be but thirteen directors on the whole line of road so consolidated, and the number to reside in each State shall be determined as in the case of consolidation."

Afterwards, on Feb. 20, 1854, an act of the same legislature was approved, entitled "An Act to amend the act entitled 'An Act to incorporate the Decatur and Indianapolis Railroad Company, approved Feb. 8, 1853.'"

The preamble and first section of this act are as follows: —

"Whereas, under and in pursuance of the authority conferred in the above-named act, the said Decatur and Indianapolis Railroad Company, after their organization, united, consolidated, and merged their stock with the stock of the Indiana and Illinois Central Railway Company, forming a single corporation by means of such consolidation under the name and style of the 'Indiana and Illinois Central Railway Company,' therefore,

"SECT. 1. That the said Indiana and Illinois Central Railway Company, as existing under the said consolidation, is hereby declared to be entitled to hold, enjoy, and possess all the property, rights, franchises, and powers held, enjoyed, and possessed by either of said original corporations prior to their said consolidation, fully and effectually, to all intents and purposes, and to be entitled to have and hold all the rights, powers, and privileges conferred, or to be hereafter conferred, by law upon railroad corporations,

organized under the act entitled 'An Act to provide for a general system of railroad incorporations,' approved Nov. 5, 1849."

The last section reads as follows: "This act shall be deemed and taken to be a public act, and shall be liberally construed in all courts of justice, and shall take effect and be in force from and after its passage."

On Feb. 22, 1861, an act was passed, entitled "An Act to extend the time for completing the Indiana and Illinois Central Railway Company." The preamble of this act is as follows: —

"Whereas the Decatur and Indianapolis Railroad Company were legally incorporated under an act entitled 'An Act to provide for a general system of railroad incorporations,' in force November 5, 1849; and whereas said Decatur and Indianapolis Railroad Company afterwards united and consolidated with the Indiana and Illinois Central Railway Company, on the fourth day of May, A. D. 1853, in compliance with the provisions of an act entitled 'An Act to incorporate the Decatur and Indianapolis Railroad Company,' in force February eighth, 1853, and of an act entitled 'An Act to amend an act to incorporate the Decatur and Indianapolis Railroad Company,' in force February twelfth, 1854, whereby said Decatur and Indianapolis Railroad Company became and was named and styled 'The Indiana and Illinois Central Railway Company;' and whereas said Indiana and Illinois Central Railway Company, in compliance with the provisions of the 44th section of an act entitled 'An Act to provide for a general system of railroad incorporations,' in force November 5th, 1849, began the construction of its roads and expended thereon ten per cent on the amount of its capital within five years after its incorporation."

The body of the act extended for ten years from and after April 26, 1863, the time for putting in full operation the Indiana and Illinois Central railway.

The forty-fourth section of an act entitled "An Act to provide for a general system of railroad incorporations," in force Nov. 5, 1849, is as follows: —

"If any such corporation shall not, within five years after its incorporation, begin the construction of its road, and expend thereon

ten per cent on the amount of its capital, and finish the road and put it in full operation in ten years thereafter, its act of incorporation shall become void."

On March 27, 1869, an act was passed supplementary and amendatory of the act of Feb. 20, 1854, above mentioned, entitled "An Act supplementary to and amending an act entitled 'An Act to incorporate the Decatur and Indianapolis Railroad Company,' approved Feb. 8, 1853."

The act legalized an election held by the voters of Macon County in favor of the issuing of bonds of said county, to the amount of $60,000, to aid in building the Indiana and Illinois Central railway, and an election subsequently held by the voters of the same county in favor of a subscription by the county of $40,000 to the capital stock of the said railroad company, and of the issuing of the bonds of the county to pay for said stock, and in favor of subscriptions by said county to three other railroad companies therein named, and the issuing of the bonds of the county to pay therefor.

Sect. 2 of the act provides as follows: —

"The several townships in counties where township organization has been adopted, lying on or near to the line of said railroad, are hereby authorized to subscribe to and to take stock in the said Indiana and Illinois Central Railway Company. Elections may be held in any such township upon the question whether such township shall subscribe for any specified amount of stock of said county, not exceeding one hundred thousand dollars, whenever a petition for that purpose shall be presented as hereinafter specified."

The subsequent sections of the act prescribe the mode of holding elections mentioned in the second section, and the levy and collection of a tax by the township authorities of the townships which voted to take stock in said railroad company, to pay the interest and principal on the bonds issued in payment thereof.

The last section extends the time for the completion of the railroad of the said Indiana and Illinois Central Railway Company to July 1, 1875.

On April 16, 1869, the legislature passed an act entitled "An Act to fund and provide for paying the railroad debts of coun-

ties, townships, cities, and towns." This act provides for the registration, in the office of the auditor of public accounts of the State, of bonds issued by counties, townships, &c., in aid of or to pay for stock in railroad companies.

Afterwards, on Sept. 13, 1869, and, as it was claimed, in pursuance of the authority conferred by the act of March 27, 1869, at a special election held on that day, a majority of the legal voters of Unity Township, in the county of Piatt, voted in favor of a subscription of $14,000 to the stock of the Indiana and Illinois Central Railway Company, and an issue of the bonds of the township sufficient to pay for such stock.

Pursuant to this vote, fourteen bonds of the township, for $1,000 each, all dated May 12, 1873, with interest coupons attached, were duly executed by the officers of the township.

The bonds, principal and interest, were made payable to the Indiana and Illinois Central Railway Company, or bearer, at the American Exchange National Bank, New York.

They contained the following recital: —

"This bond is one of a series of fourteen bonds, of one thousand dollars each, numbered from one to fourteen inclusive, issued under and by virtue of the acts of the General Assembly of the State of Illinois, entitled 'An Act supplementary to and amending an act entitled "An Act to amend the act entitled an act to incorporate the Decatur and Indianapolis Railroad Company," approved February 8th, 1853, in force March 27th, 1869, and an act entitled "An Act to fund and provide for paying the railroad debts of counties, townships, cities, and towns,"' in force 16th April, 1869, and in accordance with the vote of the electors of said township of Unity, at a special election held in said township on the thirteenth day of September, A. D. 1869, under the provisions of said acts, and in accordance therewith, and the faith of said township is hereby pledged for the payment of said principal sum and interest as aforesaid."

The plaintiffs, being the holders of these bonds, brought this suit against the township on the coupons which fell due May 12, 1878, and May 12, 1879.

The declaration having averred the execution of the bonds (designating them as promissory notes), with the interest coupons attached, proceeded as follows: —

"And each of said promissory notes recites that it is issued under and by virtue of a law of the State of Illinois, entitled 'An Act supplementary to and amending an act entitled "An Act to amend the act entitled an act to incorporate the Decatur and Indianapolis Railroad Company," approved Feb. 8, 1853,' in force March 27, 1869.

"And under a law of the State of Illinois entitled 'An Act to fund and provide for paying the railroad debts of counties, townships, cities, and towns,' in force 16th April, 1869. And in accordance with the vote of the electors of said township of Unity, at a special election held in said township on the thirteenth day of September, A.D. 1869, under the provisions of said acts and in accordance therewith.

"And the plaintiffs further aver that said promissory notes have been duly registered in the office of the auditor of public accounts of the State of Illinois, pursuant to said act of April 16, 1869, as from the certificate of said auditor of public accounts attached to each of said promissory notes will more fully appear.

"That the plaintiffs are the bearers of the coupons for interest on said promissory notes which fell due on the twelfth day of May, A.D. 1878, being seven coupons of one hundred dollars each. And also of the fourteen coupons annexed to said promissory notes and of even number therewith, each of which said coupons became due and payable on the twelfth day of May, A.D. 1879, making in all the sum of twenty-one hundred dollars.

"And the said defendant has failed to provide funds for the payment of said instruments of interest at the American Exchange National Bank, New York. And has utterly neglected to pay the same, although thereunto often requested."

The township filed a general demurrer to the declaration, which was overruled, and on its electing to stand by the demurrer and refusing to plead, judgment was rendered in favor of the plaintiff, which, by agreement of parties, was for the principal of the bonds and the interest up to June 10, 1880, amounting in all to $17,816.

This writ of error is prosecuted to reverse that judgment.

Mr. W. J. Henry for the plaintiff in error.

1. The act under which the bonds purport to have been issued is a private act. It is not specially pleaded, and the court cannot take judicial notice thereof. *Leland* v. *Wilkinson*, 6 Pet. 317; *Covington Draw Bridge Co.* v. *Shepherd*, 20 How. 227; *Beaty* v.

Lessee of Knowler, 4 Pet. 152; *Society for Prop. of Gospel* v. *Young*, 2 N. H. 310; *Perdicardis* v. *Bridge Company*, 29 N. J. L. 367; *Bank* v. *Wolliston*, 3 Harr. (Del.) 90; *City Council* v. *Plank Road Co.*, 31 Ala. 76; *King* v. *Doolittle*, 1 Head (Tenn.), 77.

2. When the consolidation was completed, the old corporations were destroyed and a new one was created. The powers were granted to it as if the old companies had never enjoyed the franchises which had been conferred by their respective charters. *Shields* v. *Ohio*, 95 U. S. 319; *Railroad Company* v. *Georgia*, 98 id. 359; *Clearwater* v. *Meredith*, 1 Wall. 25; *McMahan* v. *Morrison*, 16 Ind. 172; *Ohio* v. *Sherman*, 22 Ohio St. 411; *Shields* v. *Ohio*, 26 id. 86. As the consolidation of the two companies operated to destroy the charter of each and annul the contract between the State and the corporators, neither of the original corporations was then in existence, or had power to accept the act of March 27, 1869.

That act does not profess to be an amendment of the charter of the Indiana and Illinois Central Railway Company. It is "An Act supplementary to and amending an act entitled 'An Act to amend the act entitled an act to incorporate the Decatur and Indianapolis Railroad Company,' approved Feb. 8, 1853." The Indiana and Illinois Central Railway Company, being a new and distinct corporation, with franchises directly conferred upon it by the legislature, under a different name from that company (Private Laws 1861, p. 499), had no authority to accept or reject the attempted amendment of a surrendered charter.

3. Sect. 23 of art. 3 of the Constitution of 1848 provides that "no private or local law which may be passed by the General Assembly shall embrace more than one subject, and that shall be expressed in the title."

The amendatory act is therefore void. *O'Leary* v. *County of Cook*, 28 Ill. 534; *Fireman's Benevolent Association* v. *Lounsbury*, 21 id. 511; *Neifing* v. *Town of Pontiac*, 56 id. 172; *Prescott* v. *City of Chicago*, 60 id. 121; *Ottawa* v. *People*, 48 id. 233; *Middleport* v. *Life Insurance Co.*, 82 id. 562.

4. The Decatur and Indianapolis Railroad Company was incorporated under, and derived its powers from, an act entitled

"An Act to provide for a general system of railroad incorporations," in force Nov. 5, 1849 (Private Laws, 1861, p. 499). By the provisions of the special act in force Feb. 8, 1853, it was required to organize in full compliance with the statutory provisions providing such general system.

This ancillary and amendatory act of 1869 attempts to change the corporate powers conferred by the general statute on the company. The legislature had no power to do this. It is an attempt, not to amend or change that statute, but, on the contrary, to leave it in full force and effect as to all other companies organized under it, and to extend the power of this corporation by a special act.

Mr. James Dinsmoor, contra.

MR. JUSTICE WOODS, after stating the case, delivered the opinion of the court.

The plaintiff in error alleges that the act of March 27, 1869, by authority of which the bonds sued on were issued, is a private act, and should have been specially recited in the declaration; and as the declaration contains no such recital, it is bad on general demurrer. The defendants in error deny that the act is a private act.

Private acts are thus defined by Blackstone: —

"Special or private acts are rather exceptions than rules, being those which operate only upon particular persons and private concerns, such as the Romans entitled *senatûs decreta*, in contradistinction to the *senatûs consulta*, which regarded the whole community, and of these (which are not promulgated with the same notoriety as the former) the judges are not bound to take notice, unless they be formally shown and pleaded. Thus, to show the distinction, the statute 13 Eliz., c. 10, to prevent spiritual persons from making leases for longer terms than twenty-one years, or their lives, is a public act, being a rule prescribed to the whole body of spiritual persons in the nation; but an act to enable the Bishop of Chester to make a lease to A. B. for sixty years is an exception to this rule; it concerns only the parties and the bishop's successors, and is, therefore, a private act." 1 Black. Com. 86.

Tested by this definition, it is clear that the act under consideration is a public and not a private act. It legalizes and

makes valid elections held by the people of Macon County, Illinois, on the question of issuing the negotiable bonds of the county in aid of certain railroad companies therein named, and authorizes all the townships in the counties where township organization had been adopted, lying on or near to the line of the Indiana and Illinois Central Railway Company, on certain specified conditions, to subscribe to the stock of that company, and issue their negotiable coupon bonds in payment thereof. This statute affects not only the people of the county of Macon, and of many of the townships of all the counties lying on or near the line of the railroad designated, but also all persons to whose hands the bonds issued by the county and township mentioned, may come.

Some cases throwing light upon the question will be cited.

An act passed by the legislature of Indiana, Feb. 14, 1848, to incorporate the Ohio and Mississippi Railroad Company, provided for subscriptions to the stock of the company by the commissioners of any county through which its road might pass, and an issue of the bonds of the county to pay for the same. This act was declared a public act by this court in *Commissioners of Knox County* v. *Aspinwall*, 21 How. 539.

In *State, ex rel. Cothren*, v. *Lean* (9 Wis. 279) it was held that a law providing for the location of a county seat is a general law. The Supreme Court of Indiana, in *West* v. *Blake* (4 Blackf. (Ind.) 234), held that an act authorizing an agent of the State to lay off and sell lots in a particular town, it being the seat of government, was a public act. The courts said: "Statutes incorporating counties, fixing their boundaries, establishing court-houses, canals, turnpikes, railroads, &c., for public uses, all operate upon local subjects. They are not for that reason special or private acts." In this country the disposition has been on the whole to enlarge the limits of this class of public acts, and to bring within it all enactments of a general character, or which in any way affect the community at large. *Pierce* v. *Kimball*, 9 Me. 54; *New Portland* v. *New Vineyard*, 16 id. 69; *Gorham* v. *Springfield*, 21 id. 58; *Burnham* v. *Webster*, 5 Mass. 266; *Commonwealth* v. *McCurdy*, id. 324; *Commonwealth* v. *Springfield*, 7 id. 9; Bac. Abr., Statute F. On these, and many other authorities which might be cited, we

think that the act by which the issue of the bonds sued on was authorized is a public act, of which the courts are bound to take judicial notice, and that it need not be specially pleaded.

But independently of authority there is a conclusive answer to this claim of the plaintiff in error.

The act of Feb. 24, 1854, to which the act of March 27, 1869, is supplementary and amendatory, is declared in express terms by its fifth section to be a public act. It cannot, therefore, be said that the act which supplements and amends it, and thereby becomes a part of it, is a private act. If one is public, both must be.

The plaintiff in error next claims that the Decatur and Indianapolis Railroad Company and the Indiana and Illinois Central Railway Company were consolidated; that the effect of the consolidation was to destroy the old corporations and create a new one, and, therefore, when the act of March 27, 1869, was passed, entitled an act supplementary to and amending an act entitled "An Act to amend the act entitled an act to incorporate the Decatur and Indianapolis Railroad Company, approved Feb. 8, 1853," and authorizing certain townships to subscribe to the capital stock of the Indiana and Illinois Central Railway Company, the charter of the Decatur and Indianapolis Railroad Company had been surrendered; that the company had ceased to exist, and that, there being no corporation to which it could apply, the act of March 27, 1869, was, therefore, of no effect.

This seems to be an attempt to overturn by argument and inference a deliberate enactment of the legislature, and erase it bodily from the statute book.

Let it be conceded that the effect of the consolidation of the two companies was to create a new corporation under the name of the Indiana and Illinois Central Railway Company. It was perfectly competent for the legislature to authorize townships to subscribe to the stock of the new company, and issue their bonds in payment thereof. This was what the act under consideration did. The act which it purported to amend, after reciting in its preamble the fact of the consolidation of the Decatur and Indianapolis Railroad Company with the Indiana

and Illinois Central Railway Company, conferred on the latter company, "as existing under the consolidation, all the property, rights, franchises, and powers held, enjoyed, and possessed by either of said original corporations prior to their said consolidation."

The act under consideration authorized certain townships to subscribe stock to this corporation thus formed, and to issue their bonds in payment therefor. It might fairly be entitled an act to amend an act, by authority of which the company existed.

The new company, existing by recognition of the act of Feb. 20, 1854, had the capacity to accept, and did accept, this amendment, for it received and put in circulation the bonds issued under its authority.

There is no ground for the theory that the act of March 27, 1869, is inoperative. We are bound, if possible, to give it effect, *ut res magis valeat quam pereat.* So far from its binding force being a matter of doubt, we see no difficulty, based on the reasons advanced by the plaintiff in error, in the way of giving it full and complete effect.

It is next said by the plaintiff in error that the act is unconstitutional, and, therefore, void and of no force.

The ground of its unconstitutionality is alleged to be that it does not conform to sect. 23 of art. 3 of the Constitution of Illinois of 1848, which provides that "no private or local law which may be passed by the General Assembly shall embrace more than one subject, and that shall be expressed in the title."

Assuming the act in question to be a local law, is it open to the objection urged against it? It legalizes two elections held by the people of Macon County; the first to decide whether the county should issue its bonds to the amount of $60,000 to aid in building the Indiana and Illinois Central Railway, and the second to decide whether the county should subscribe $40,000 to the stock of said railway company and issue its bonds for that amount in payment thereof, and declares valid and binding any bonds of the county issued or to be issued in pursuance of said elections, and it authorized certain townships on conditions prescribed to subscribe to the stock of said railway company, and issue their bonds in payment thereof.

This act is entitled an act "supplementary to and amending" the act conferring corporate powers on the Indiana and Illinois Central Railroad Company.

The question whether such an act is obnoxious to the provision of the Illinois Constitution in relation to the subject and title of local acts, has been substantially decided in the negative by this court in the case of *San Antonio* v. *Mehaffy*, 96 U. S. 312.

The Constitution of Texas declares that "every law enacted by the legislature shall embrace but one object, and that shall be expressed in the title." The act of the legislature of Texas, said to be in violation of this provision, was entitled "An Act to incorporate the San Antonio Railroad Company." Among other provisions, it authorized the city of San Antonio to take stock in that company, and issue bonds to pay for the same. The act was decided to have but one object, and that was expressed in the title.

The Supreme Court of Illinois, in the case of *The Belleville &c. Railroad Company* v. *Gregory* (15 Ill. 20) has decided that an act whose title was "An Act to incorporate the Belleville and Illinois Railroad Company," and which contained a section which authorized the city of Belleville and the county of St. Clair to subscribe for stock in the company, was not in violation of the section of the State Constitution under consideration. *Fireman's Benevolent Association* v. *Lounsbury*, 21 Ill. 511; *Supervisors of Schuyler County* v. *People*, 25 id. 181; *O'Leary* v. *County of Cook*, 28 id. 534; *Erlinger* v. *Boneau*, 51 id. 94; *People* v. *Brislin*, 80 id. 423; *Binz* v. *Weber*, 81 id. 288. The act cannot, therefore, be held to be open to the constitutional objection under consideration.

But it is insisted that the second election ratified by the act under consideration, not only had reference to subscriptions of stock and the issue of bonds in aid of the Indiana and Illinois Railway Company, but also of three other railroad companies, and the act, therefore, contained more than one subject, and the latter subject was not expressed in the title.

In such a case the provisions of the law touching the subject, which is expressed in the title, must stand. Those relating to the other subjects, not expressed in the title, alone fall. By

such a construction the purpose of the constitutional provision is fully accomplished.

All the provisions of the law under consideration which have reference to the Indiana and Illinois Central Railway Company constitute but one subject; this, as we have seen, is expressed in the title; the other matters constituting other subjects, not expressed in the title, are so entirely disconnected with that which is expressed, that they can be eliminated and leave the remainder of the act in full force. *Packet Company* v. *Keokuk*, 95 U. S. 80.

We are of opinion, therefore, that so much of the act of March 27, 1869, as authorizes the issue of the bonds sued on, is fairly expressed in the title, and is constitutional and valid.

It is next alleged by the plaintiff in error that the Decatur and Indianapolis Railroad Company was incorporated under the general law of Illinois "to provide for a general system of railroad incorporations," and not under the special act to incorporate the Decatur and Indianapolis Railroad, of Feb. 8, 1853. And it is insisted that the act of March 27, 1869, under authority of which the bonds in suit were issued, was an attempt by special act to add to the powers conferred upon the company by a general law.

Conceding the premises, we do not think the conclusion follows. There is nothing in the Constitution of Illinois or the unwritten restraints upon legislative power which forbids such an enactment. We can see no reason, either in the Constitution of the State or in public policy, to restrain the legislature from declaring that certain townships may subscribe to the stock of a particular railroad company, organized under a general law, and issue their bonds to pay for the same.

But the premises which we have conceded are not true. The Decatur and Indianapolis Railroad Company was organized under the special authority of the act to incorporate that company upon compliance with the requirements of the general law.

The Indiana and Illinois Central Railway Company, in whose behalf the act of March 27, 1869, was passed, derived its corporate existence and power from a consolidation between a

company of that name and the Decatur and Indianapolis Railroad Company, made by authority of the law under which the latter company was organized, and of the act of Feb. 20, 1854, which recognized the consolidation and confirmed to the new company "all the property, rights, franchises, and powers held and enjoyed by either of said original corporations."

The Indiana and Illinois Central Railroad Company derived its existence from special laws and not from the act to provide for a general system of railroad incorporations. There is, therefore, no ground for the objection under consideration to stand on.

The case is a clear one, and it is unnecessary to devote further space to its discussion. There was in existence, by virtue of the legislation of the State of Illinois, a corporation known as the Indiana and Illinois Central Railway Company. By a perfectly valid and constitutional act certain townships, among them the plaintiff in error, were authorized, upon a vote of a majority of their legal voters, to subscribe stock in the railway company mentioned and issue their bonds to pay for it. The election was held under this law in the township of Unity. A majority of its legal voters at that election decided in favor of subscribing to the stock of the railroad company, and issuing the bonds of the township in payment thereof. The stock was accordingly subscribed, and the bonds were issued by authority of law and sold. The railroad has been built and is in full use as one of the post-roads of the United States. The holders of the bonds are entitled to their money, and there is no legal obstacle in the way of a judgment therefor in their favor.

Judgment affirmed.

WICKE *v.* OSTRUM.

38 J-430
108 461
L-ed 409
49 f 869
103 461
L-ed 409
54 f 517

1. The invention embraced by letters-patent No. 38,924, granted June 16, 1863, to George Wicke, for an improvement in machines for nailing boxes, is a new combination of old elements, all of which are necessary to the validity of his letters.
2. The fourth and fifth claims of those letters, fairly construed, are for the combination of the cam, gate, and treadle of the adjustable carriage, table, and slide, with the elements of the other claims, and they are not infringed by machines manufactured substantially in accordance with letters-patent No. 172,579, granted Jan. 25, 1876, to Henry P. Ostrum, for an improvement in machines for nailing boxes.

APPEAL from the Circuit Court of the United States for the Southern District of New York.

This is a suit by William Wicke against Henry P. Ostrum to restrain the alleged infringement by the latter of letters-patent No. 38,924, granted June 16, 1863, to George Wicke, for an improvement in machines for nailing boxes, of which letters the complainant is the owner. The defendant denied the infringement, and alleged that the machines made, used, and sold by him were manufactured substantially as specified and claimed in letters-patent No. 172,579, granted to him Jan. 25, 1876, for an improvement in machines for nailing boxes.

The specification and drawings of Wicke's machine are as follows: —

"*To all whom it may concern:*

"Be it known that I, George Wicke, of the city, county, and State of New York, have invented a new and improved machine for nailing boxes; and I do hereby declare that the following is a full, clear, and exact description of the same, reference being had to the accompanying drawing forming a part of the specification, in which —

"Fig. 1 represents a sectional side elevation of my invention.

"Fig. 2 is a front elevation of the same.

"Similar letters of reference in both views indicate corresponding parts. The object of this invention is to drive the nails which hold together the several boards constituting a box for cigars or for other articles. The nails are generally driven by a hammer, each

nail for itself, which obviously is a very tedious operation. This invention consists in the employment of grooved spring jaws for

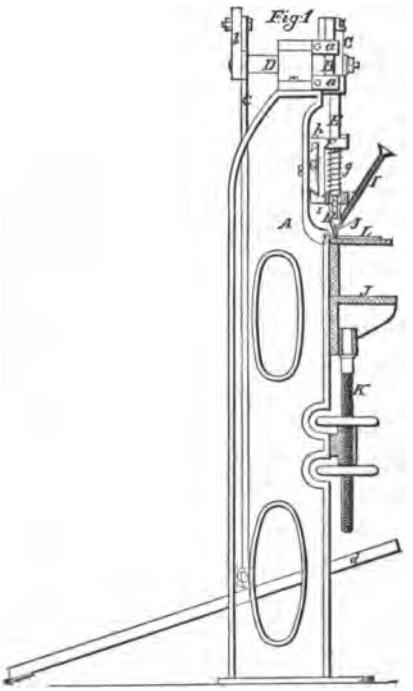

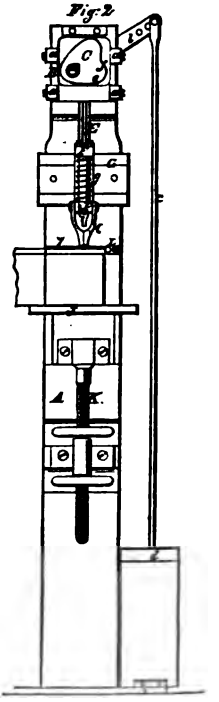

the purpose of holding the nails and to guide them to the proper place, and it consists further in combining with said spring jaws a corresponding number of rising and falling plungers for the purpose of driving each nail singly and all at the same time; and also in arranging said plungers with globe or disk shaped collars in such a manner that they spread the grooved spring jaws at the proper moment and allow the heads of the nails to pass; also in arranging the cam that serves to depress the plungers with a circular portion in such a manner that the plungers cannot be depressed any further than necessary to drive the nails; finally, in the general arrangement and combination of all the parts, so that the plungers and jaws as well as the table which supports the boards can be adjusted according to the different sizes of boxes to be made.

"To enable others skilled in the art to make and use my invention, I will proceed to describe it.

"*A* represents a frame of cast-iron or of any other suitable material. Secured to the upper part of this frame by means of angular guide-pieces, *a*, is the rising and falling gate *B*, which is operated by means of a cam, *C*, on the end of a shaft, *D*, which connects by an arm *b* and rod *c* with a treadle, *d*.

"The cam *C*, on being turned in the direction of the arrow marked on it in Figure 2, depresses the gate *B*, until the circular portion *e f* bears upon the gate. This portion of the cam is made to form part of a circle described from the centre of shaft *D*, so that the cam may be turned more or less without depressing the gate *B* any further than desirable.

"The gate *B* acts on one or more plungers, *E*, each of which moves up and down in a carriage, *F*, and a spring, *g*, has the tendency to raise the plunger after the same has been depressed, or to keep it up when not exposed to the action of any power. The carriage *F* slides in a lateral direction on ways *G*, and it is adjusted at the proper point where the nail is to be driven by set screws *h*. A series of plungers to correspond to the number of nails to be driven simultaneously may be so arranged that, by depressing the treadle, all the plungers are depressed and consequently all the nails inserted at the same time.

"The lower end of the plunger *E* is turned down, as clearly shown in the drawing, leaving them just large enough to cover the heads of the nails to be driven, and a disk-shaped collar, *i*, is formed at a short distance above the lower ends.

"When depressed, the plunger enters the spring jaws *H*, which are secured to the sides of the carriage *F*. These jaws are provided with grooves, *j*, to receive the nails (see Figure 1), and they are so formed that when the plunger descends, the disk-shaped collar *i* spreads the same, allowing the head of the nail to pass freely through the grooves *j*.

"The nails are fed through an inclined tubular channel, *I*, one after the other, and if several plungers are used, the whole series are depressed by one motion of the cam *C*.

"A table, *J*, on the lower portion of the frame *A*, serves to support the boards to be nailed, and this table is adjustable by means of screw spindle *K*; said boards are adjusted in the correct position by a slide, *L*, which is adjustable in a groove *l*. A small recess in the frame *A* allows the horizontal boards to project very little beyond the edge of the vertical board, so that the rough edges of the boards can be removed by the aid of a plane after the nailing has been accomplished.

"The table *J*, the slide *L*, and the plunger or plungers can thus be adjusted to suit boxes of different size, and the nails are driven simultaneously by one motion of the foot.

"What I claim as new, and desire to secure by letters-patent, is —

"1st, The employment of the grooved spring jaws, *H*, substantially as described for the purpose of receiving the nails, and to guide them to their proper places.

"2d, The combination with the spring jaws, *H*, of the rising and falling plunger, *E*, constructed and operated substantially as and for the purpose described.

"3d, Arranging the plunger, *E*, with a disk-shaped collar, *i*, or its equivalent, to operate in combination with the spring jaws, *H*, substantially as and for the purpose described.

"4th, The arrangement of the circular portion, *e*, *f*, on the cam, *C*, to operate in combination with the gate, *B*, and treadle, *d*, substantially as and for the purpose set forth.

"5th, The arrangement and combination of one or more adjustable carriages *F*, table *J*, and slide *L*, constructed and operating in the manner and for the purpose substantially as specified."

Ostrum's specification and drawings are as follows: —

"*To all whom it may concern:*

"Be it known that I, Henry P. Ostrum, of the city and county of New Haven, State of Connecticut, have invented an improvement in machines for nailing boxes, and I do hereby declare the following to be a full, clear, and exact description of the invention, such as will enable others skilled in the art to which it appertains to make and use it, reference being had to the accompanying drawing, forming a part of this specification, in which —

"Figure 1 is a direct end view or elevation of the end of the machine. Figure 2 is a perspective view of the machine.

"My invention relates to that class of machines which are used for nailing together the sides and ends of boxes, in which any required number of nails may be simultaneously driven by a treadle or other means, and consists in a novel construction and arrangement of parts hereinafter more fully set forth and claimed.

"The letter *A*, Fig. 2, indicates a platform of cast-iron, having projections on its under side in which the rod *y*, screws *p p*, and rock shaft *G*, turn, and on which the ratchets *o o* move back and forth. This platform, with the legs attached, constitutes the frame of the machine. The rest *B* is a straight bar of metal extending

across and beyond the platform *A*, and has pins *x x* passing through holes in the same, which are forced down upon the ratchets *o o* by

Fig. 1.

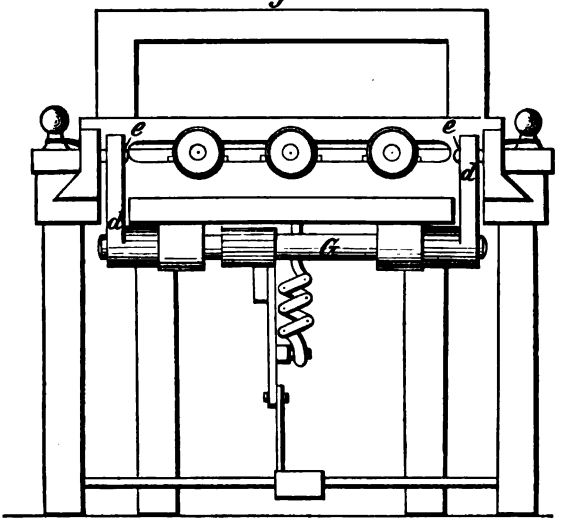

Fig. 2.

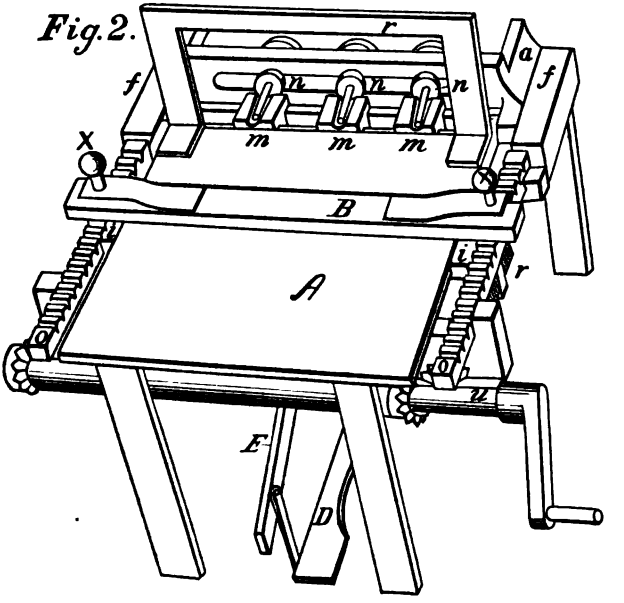

springs attached to the rest. It is also provided with the guides *i i*, which slide between the side edges of the platform and the ratchets *o o*. The ratchets *o o* are straight bars of iron with notches on their upper sides, and are movable back and forth, on the projections from the under sides of the platform, and extending beyond it. Each of these ratchets has a nut attached to it, in which the screws *p p* turn and by which the ratchets are moved. Only one of these screws is shown in the drawing. In the front projection from the under side of the platform are two screws or threaded bolts *p p*, Fig. 2, which turn in the projection and in the nuts attached to the ratchets, and have a bevel-gear wheel attached, by which they are turned. The shaft *y* is also made to turn in the projections from the under side of the platform, and is furnished with two bevel-gear wheels, which mesh in the bevel-gear wheels on the screws *p p*, and is also furnished with a crank on one of its ends. The elevated straight bar *r*, supported on two posts attached to the platform, is arranged so that its front side and the front ends of the dies *m m m* are in the same plane, and serves to hold one of the pieces to be nailed at right angles to the other piece resting on the platform. The dies *m m m* vary in number with the nails to be driven; are made with slots on their upper sides, which are enlarged at their ends nearest the hammers, to correspond with the size of the heads of the nails placed in them; and to allow the nails to lie parallel with the platform, or nearly so, and are fitted into the dovetailed slot in the platform. They are loosely held in their places by the hammers, and may be, when desired, securely held by a wedge in the dovetailed slot, moved by a screw on its outer end.

"The head *a* is a bar of cast metal, extends across the platform, and has on its ends enlargements or cross-pieces, which slide on the platform. It is held in its place by the pieces, *f f*, screwed to the platform, and has a slot in which the hammers are held, and a pin, *e*, in each of the enlargements or cross-pieces which fit in the slots in the short arms *d d* of the rock shaft *G*, by which the head is moved back and forth. The hammers *n n n* vary also in number with the nails to be driven, and are in the form of a threaded bolt with a head, from the front ends of which small rods, a little larger than the nails to be driven, project into the enlarged end of the slots in the dies. They are provided with nuts, by which they are held in the head *a*, and by which they may be adjusted at any distance apart. The rock shaft *G*, arranged under the platform, is made to turn in projections from the platform, and with a long arm

E extending nearly to the front side of the machine; also with two short upright arms, *d d*, having slots in their ends. A spiral spring extends from the long arm, and is attached to the under side of the platform, and draws the arm upwards, while the short arms move the head *a* backward.

"The treadle *D* is a part of, or is attached to, a bar, extending to a shaft pivoted to two of the legs of the frame, or is otherwise suitably constructed; it is also suitably connected to the long arm of the rock shaft.

"With the above description of the parts of my machine, its operation will be readily understood. As the pieces to be nailed together are placed, the one perpendicularly against the front ends of the dies *m m m*, and against the elevated bar *a*, and the other on the platform against the first, and as the rest *B* is adjusted against it by the pins *x x*, operating on the ratchets *o o*, as pawls, the pieces are then screwed together between the dies *m m m*, and the rest *B*, by turning the rod *y*, geared to the screws *p p*, moving the ratchets *o o*, and the rest *B*. The frame *A*, the dies *m m m*, and the rest *B*, adjusted by the pins *x x*, acting on the ratchets *o o*, and moved by the screws *p p*, co-operate to tightly hold the pieces to be nailed. The pieces being thus held, as the treadle *D* is forced downward, the head *a*, with the hammers *n n n*, is forced forward, driving the nails placed in the slots in the dies *m m m*, to their places, nailing the two pieces together.

"I am aware of the patent granted to M. Blaser, No. 155,284, Sept. 22, 1874, and hereby disclaim the same.

"I claim as my invention —

"The combination of frame *A*, treadle *D*, rock shaft *G*, head *a*, provided with one or more adjustable hammers, *n n*, one or more adjustable dies, *m m*, and the rest *B*, all the said parts constructed and combined substantially as set forth."

The court, on final hearing, dismissed the bill, and the complainant appealed.

Mr. Arthur v. Briesen for the appellant.

Mr. William T. Birdsall and *Mr. N. A. Calkins, contra.*

MR. CHIEF JUSTICE WAITE delivered the opinion of the court.

The patent sued on in this case is for a machine for nailing boxes, invented by George Wicke. Before this invention nails

were driven singly, and by hand. By the machine more than one could be driven at the same time.

In the description of the invention which accompanied the application for the patent, the inventor said, in effect, that it consisted in the employment of grooved spring jaws for the purpose of holding the nails and guiding them to their places, combined with a corresponding number of rising and falling plungers for driving each nail singly and at the same time. The plungers were made with globe or disk shaped collars, so adjusted or arranged that they would spread the spring jaws at the proper moment to allow the heads of the nails to pass. To depress the plungers, he arranged a cam, so formed and fitted as to have spent its force when the nail was driven to its place. "Finally," he said his invention consisted "in the general arrangement and combination of all its parts, so that the plungers and jaws, as well as the table which supports the boards, can be adjusted according to the different sizes of the boxes to be made." He then described the construction of the different parts of the machine and the manner of its operation, from which, and the drawings and models, it appears that the machine was an upright one, by means of which the nails were to be driven vertically.

With such a machine the nails must necessarily be held in place by some mechanical device until they were guided to and fastened in the board. A nail implies a head larger than its point, and, if it is to be driven vertically, some provision must be made for directing the point carefully to its proper place, and then letting the head pass without obstruction as it is driven. Such clearly was the office of the "grooved spring jaws" and the "globe or disk shaped collars" of the plungers in this machine.

To make the claims of his letters-patent intelligible, they must be read in connection with the specifications to which they relate, and in this way it becomes apparent that the object of the inventor was to secure a patent for a new combination of old elements. Grooved spring jaws were confessedly very old. So were rods of iron with curvilinear projections, like those called plungers, and cams, of almost any shape, and treadles, and levers, and adjustable carriages, tables, and slides.

The use of these things separately could not be patented. But the combination of them so as to produce a machine useful for driving nails was new. This the inventor might claim, and, so far as anything appears, he was entitled to a patent for the employment of spring jaws in the combination and for the purpose described in his specifications; for the combination of his peculiarly shaped plungers with spring jaws for the purposes of such a machine; for the use of the cam he described in combination with the gate and treadle to drive his machine; and for the adjustable carriage, table, and slide when used on such a machine as his. He was entitled also to the benefit of all the mechanical equivalents of his several elements, known at the time of his invention, if used in the same combination.

As has already been seen, Wicke made an upright machine. For such a machine the combination of all his several elements was necessary. If any one, or its mechanical equivalent, was left out, an upright machine like his could not be operated successfully. A combination of other elements, not the equivalents of his, would be a different machine, and consequently not an infringement. From the evidence it is clear he was the first to put into practical use the idea of driving more than one nail at the same time in the manufacture of boxes by the use of machinery. The idea he could not patent, but his contrivance to make it practically useful he could. By his patent he appropriated to himself only so much of the field of invention which his idea embraced as was covered by the machine described in his specification and claimed in his application.

The defendant conceived the idea of driving nails horizontally instead of vertically, and made a machine for that purpose, which he patented. He does not use the spring jaws or the peculiar shaped plungers of the Wicke machine, because he does not need them. As his object is to drive the nails horizontally, they can be laid in a groove and held there by gravity until forced into the board. Having no spring jaws to be opened, he need not shape his plunger or driver so as to effect that object. He thus has been enabled to dispense with two elements of Wicke's combination, in the absence of which that machine could not be successfully worked. Neither has he substituted any mechanical equivalent for what he has thus

put aside. By changing the form of the machine and the manner of its operation, he has no need of any such contrivances. He may use the equivalent of one half of the spring jaw of Wicke's machine, but he does not want the other half, or anything else in its place, as the nail will lie where it is put until driven into the board. He accomplishes by natural causes what Wicke required a mechanical contrivance to do. His machine will not do the work of Wicke's, that is to say, drive a nail vertically, nor will Wicke's do that of his, and drive horizontally. The truth is, the two machines are entirely unlike, and while they both drive more nails than one at the same time, they do it in different ways. That of Wicke, operating vertically, requires all the elements of his combination, while that of the defendant, doing its work in another way, is made by leaving out two elements which are indispensable to Wicke.

The fair construction of the fourth and fifth claims is that they are for the combination of the cam, gate, and treadle, or the adjustable carriage, table, and slide, with the elements of the other claims. It is possible that if there had been nothing more done by the defendant than to put into the machine of Wicke his rock shaft and attachments in the place of the cam, the shaft would be considered as the equivalent of that element in Wicke's device. So, too, the bed, slides, and gauges of the defendant's machine, if used in that of Wicke, might be considered the same in effect as the adjustable carriage, table, and slide which he contrived. But these contrivances of the defendant are not used in combination with any of the other devices of Wicke, and, therefore, they do not infringe his claims.

On the whole, we are clearly of the opinion that the court below was right in holding, as it did, that no infringement had been proven.

Decree affirmed.

EDWARDS v. UNITED STATES.

130-315
" 316

1. The common-law rule is in force in Michigan, that the resignation of a public officer is not complete until the proper authority accepts it, or does something tantamount thereto, such as to appoint a successor.
2. After making a return to the alternative *mandamus* sued out against him by a judgment creditor of a township, the township supervisor cannot set up the non-service of any notice in the cause.

ERROR to the Circuit Court of the United States for the Western District of Michigan.

The facts are stated in the opinion of the court.

Mr. H. F. Severens for the plaintiff in error.

Mr. John W. Stone and *Mr. M. J. Smiley, contra.*

MR. JUSTICE BRADLEY delivered the opinion of the court.

William F. Thompson, on the fifth day of September, 1874, recovered a judgment in the court below against the township of St. Joseph, in the county of Berrien, Michigan, for the sum of $17,327.86 besides costs.

By the laws of Michigan an execution cannot be issued against a township upon a judgment, but it is to be "levied and collected as other township charges;" and when collected to "be paid by the township treasurer to the person to whom the same shall have been adjudged." Comp. Laws of 1871, sect. 6630. The mode of raising money by taxation in townships is prescribed in sects. 992 and 997, which make it the duty of the township clerk, on or before the first day of October of each year, to make and deliver to the supervisor of the township a certified copy of all statements on file, or of record, in his office, of moneys proposed to be raised therein by taxation for all purposes; and it is made the duty of the supervisor, on or before the second Monday of said month, to deliver such statements to the clerk of the board of supervisors of the county, to be laid by him before the board at its annual meeting. At this meeting the board is required to direct the several amounts to be raised by any township, which appear by the certified statements to be authorized by law, to be spread upon the assessment roll of the proper township, together with its due

proportion of the county and State taxes. The whole is then certified and delivered by the clerk of the board to the town supervisor whose duty it is to make the individual assessment to the various taxpayers of the township in proportion to the estimate and valuation of their property. The assessment roll is then delivered to the town treasurer for collection.

The judgment in the present case not being paid, and the township officers having refused to take any steps to levy the requisite tax for the purpose, the United States, on the relation of Thompson, on the 11th of October, 1876, filed a petition for a *mandamus* against Edward M. Edwards, supervisor of the township of St. Joseph, in which he set forth the judgment, and alleged that, on the 26th of September, 1876, he caused a certified transcript of the judgment to be served on the township clerk, with proper notice and demand; and on the 27th of September, 1876, he caused a similar transcript, notice, and demand to be served on Edwards, the supervisor. The petition further alleged that these officers refused to do anything in the premises, the clerk pretending to have resigned his office. An alternative *mandamus* was issued commanding Edwards, as supervisor of the township, forthwith to deliver to the clerk of the board of supervisors of the county a statement of the claim of relator under and by virtue of the judgment.

Edwards duly filed a return, stating that he was not supervisor, and had no authority to perform the acts required of him; that at the general election of April 3, 1876, he was duly elected supervisor, and qualified and entered upon his office, and continued in office until the 7th of June, 1876, when he resigned; that his resignation was in writing as follows: —

"To the township board of the township of St. Joseph, county of Berrien, State of Michigan: I hereby tender my resignation of the office of supervisor of this township. St. Joseph, June 7, 1876.

(Signed) "EDWARD M. EDWARDS."

That this written resignation was delivered to and filed by the township clerk on the same day; that since then he, Edwards, had not been supervisor, nor had he acted as such, or had charge of the records or papers of the office. He further

stated in his return that the township clerk had never delivered to him any certified copy of any statement of the moneys to be raised by taxation, either for the purpose of paying the claim of the relator, or for any other purpose.

To this return the relator demurred. The demurrer was sustained, and a peremptory *mandamus* awarded. Edwards sued out this writ of error.

If we could take notice of the affidavits annexed to the petition for *mandamus*, we should not have much difficulty in drawing the conclusion that the pretended resignations of the clerk and supervisor were either simulated or made for the purpose of evading compulsory performance of their duties. But the return being demurred to must be taken as true, and the affidavits cannot be considered. The only question to decide, therefore, is whether the facts set forth in the return exhibit a good and sufficient answer to the alternative writ; whether, in other words, they show such a completed resignation on the part of Edwards as amounts to a deposition of his office of supervisor of the township. This is the issue made by the parties, and it is an issue of law. The plaintiff in error insists that having done all that he could do to discharge himself from the office, by filing a written resignation with the township clerk, his resignation was complete. The defendant in error insists that a resignation is not complete until it is accepted by the proper authority. The question then is narrowed down to this: was the resignation complete without an acceptance of it, or something tantamount thereto, such as the appointment of a successor?

As civil officers are appointed for the purpose of exercising the functions and carrying on the operations of government, and maintaining public order, a political organization would seem to be imperfect which should allow the depositaries of its power to throw off their responsibilities at their own pleasure. This certainly was not the doctrine of the common law. In England a person elected to a municipal office was obliged to accept it and perform its duties, and he subjected himself to a penalty by refusal. An office was regarded as a burden which the appointee was bound, in the interest of the community and of good government, to bear. And from this it followed of course

that, after an office was conferred and assumed, it could not be laid down without the consent of the appointing power. This was required in order that the public interests might suffer no inconvenience for the want of public servants to execute the laws. See 1 Kyd, Corporations, c. 8, sect. 4; Willcock, Corporations, pp. 129, 238, 239; Grant, Corporations, pp. 221, 223, 268; 1 Dillon, Mun. Corp., sect. 163; *Rex* v. *Bower*, 1 Barn. & Cres. 585; *Rex* v. *Burder*, 4 T. R. 778; *Rex* v. *Lone*, 2 Stra. 920; *Rex* v. *Jones*, id. 1146; *Hoke* v. *Henderson*, 4 Dev. (N. C.) L. 1; *Van Orsdall* v. *Hazard*, 3 Hill (N. Y.), 243; *State* v. *Ferguson*, 31 N. J. L. 107. This acceptance may be manifested either by a formal declaration, or by the appointment of a successor. "To complete a resignation," says Mr. Willcock, "it is necessary that the corporation manifest their acceptance of the offer to resign, which may be done by an entry in the public books, or electing another person to fill the place, treating it as vacant." Willcock, Corporations, 239.

In this country, where offices of honor and emolument are commonly more eagerly sought after than shunned, a contrary doctrine with regard to such offices, and, in some States, with regard to offices in general, may have obtained; but we must assume that the common-law rule prevails unless the contrary be shown. In Michigan we do not find that any contrary rule has been adopted; on the contrary, the common-law rule seems to be confirmed by the statutes of the State, so far as their intent can be gathered from their specific provisions. By sect. 690 of the Compiled Laws of 1871, if any person elected to a township office (except that of justice), of whom an oath is required, and who is not exempt by law, shall not qualify within ten days, he is subjected to a penalty of ten dollars. By sects. 691, 693, resignations of officers elected at township meetings must be in writing, addressed to the township board, who is authorized to make temporary appointments to fill vacancies. The township board is composed of the supervisor, the two justices of the peace whose term of office will soonest expire, and the township clerk, any three of whom constitute a quorum. Sect. 706. Resignations of other officers are directed to be made generally to the officer or officers who appointed them,

or who may be authorized by law to order a special election to fill the vacancy. Sect. 615. These provisions indicate a general intention in conformity with the principles of the common law. They make the acceptance of a township office a duty, and they direct resignations of office generally to be made to those officers who are empowered either to fill the vacancy themselves, or to call an immediate election for that purpose, — the controlling object being to provide against the public detriment which would ensue from the continued or prolonged vacancy of a public office. The same intention is manifested by sect. 649, which prescribes the term of office of township officers as follows: "Each of the officers elected at such meetings [that is, the annual meetings of the township], except justices, commissioners of highways, and school inspectors, shall hold his office for one year, *and until his successor shall be elected and duly qualified.*" Here is manifested the same desire to prevent a hiatus in the offices. There is nothing in the spirit of this legislation to indicate that the common-law rule is discarded in Michigan.

Sect. 617 of the Compiled Laws declares that "every office shall become vacant on the happening of either of the following events before the expiration of the term of such office: "First, the death of the incumbent; second, his resignation; third, his removal from office," &c. But it is nowhere declared when a resignation shall become complete. This is left to be determined upon general principles. And in view of the manifest spirit and intent of the laws above cited, it seems to us apparent that the common-law requirement — namely, that a resignation must be accepted before it can be regarded as complete — was not intended to be abrogated. To hold it to be abrogated would enable every office-holder to throw off his official character at will, and leave the community unprotected. We do not think that this was the intent of the law.

The plaintiff in error has referred us to several authorities to show that in this country the doctrine that a resignation to be complete must be accepted, does not prevail. But whilst this seems to be the rule in some States it is not the case in all. In many States the common-law rule continues to prevail. In *Hoke* v. *Henderson*, *supra*, decided in 1832, Mr. Chief Justice Ruffin.

speaking for the Supreme Court of North Carolina, said: "An officer may certainly resign; but without acceptance his resignation is nothing, and he remains in office. It is not true that an office is held at the will of either party. It is held at the will of both. Generally resignations are accepted; and that has been so much a matter of course with respect to lucrative offices, as to have grown into a common notion that to resign is a matter of right. But it is otherwise. The public has a right to the services of all the citizens, and may demand them in all civil departments as well as in the military. Hence there are on our statute book several acts to compel men to serve in offices. Every man is obliged, upon a general principle, after entering upon his office, to discharge the duties of it while he continues in office, and he cannot lay it down until the public, or those to whom the authority is confided, are satisfied that the office is in a proper state to be left, and the officer discharged." p. 29. Similar views were expressed by Mr. Justice Cowen in 1842, in *Van Orsdall* v. *Hazard*, *supra;* and many common-law authorities on the subject were referred to. The Supreme Court of New Jersey maintained the same doctrine in 1864 in an able opinion delivered by the present learned Chief Justice, in the case of *State* v. *Ferguson*, *supra*. Speaking of the officer in question (an overseer of highways), the Chief Justice said: "If he possess this power to resign at pleasure, it would seem to follow, as an inevitable consequence, that he cannot be compelled to accept the office. But the books seem to furnish no warrant for this doctrine. To refuse an office in a public corporation connected with local jurisdiction was a common-law offence, and punishable by indictment." After reviewing the authorities cited to the contrary, particularly that in 1 McLean, 509, the Chief Justice concludes: "I do not think any of the other cases relied upon on the argument sustain in the least degree the doctrine, but on the contrary they all imply that the resignation, to be effectual, must be accepted."

In *Gates* v. *Delaware County* (12 Iowa, 405), referred to and much relied on by the plaintiff in error, whilst the court asserts that acceptance is not necessary, it nevertheless finds that there was, in fact, an acceptance in that case. The county judge, to whom the superintendent of schools addressed his resignation,

indorsed it "Resignation," and filed it in his office of the date specified; which act, under the circumstances, was considered by the court an acceptance. This case, therefore, cannot be regarded as definitively settling the doctrine even in Iowa.

Much reliance is also placed on the decision of Mr. Justice McLean in the Circuit Court in *United States* v. *Wright* (1 McLean, 509), where Wright was sued as surety on a collector's bond for delinquency committed by the collector after he had sent his resignation to the President, but before it was accepted. Mr. Justice McLean held that the resignation was complete when received and that the defendant was not liable. In announcing his decision he used this broad language: "There can be no doubt that a civil officer has a right to resign his office at pleasure, and it is not in the power of the Executive to compel him to remain in office." Mr. Chief Justice Beasley, of New Jersey, in commenting upon this language in *State* v. *Ferguson*, already cited, justly observes: "It is hardly to be supposed that it was the intention of the judge to apply this remark to the class of officers who are elected by the people and whose services are absolutely necessary to carry on local government; or that it was the purpose to brush away with a breath the doctrine of the common law, deeply rooted in public policy upon the subject. However true the proposition may be as applied to the facts then before the Circuit Court, it is clearly inconsistent with all previous decisions, if extended over the class of officers where responsibility is the subject of consideration."

But conceding that the law in some of the States is as contended for by the plaintiff in error, — and he cites cases to this purpose decided in Alabama, Indiana, California, and Nevada, — and conceding that Mr. Justice McLean's decision may have been correct in the particular case before him, the question is, what is the law of Michigan? and we think it has been shown that the common-law rule is in force in that State.

Now, in the present case, it is true that the defendant in his return avers that he resigned his office on the 7th of June, 1876. But he does not stop here. He goes on to show precisely what he did do. His whole return on this branch of the subject is as follows: —

"That, at the general election of April 3, 1876, this respondent was duly elected the supervisor of said township of St. Joseph, and on April 8, 1876, respondent qualified and entered upon his office as such supervisor. That respondent continued in said office of supervisor until the seventh day of June, 1876, when this respondent resigned his office as such supervisor. That such resignation was in writing, of which the following is a true copy: —

"'To the township board of the township of St. Joseph, county of Berrien, and State of Michigan: I hereby tender my resignation of the office of supervisor of this township. St. Joseph, June 7, 1876. "'EDWARD M. EDWARDS.'

"That said writing, of which the above is a copy, was signed by this respondent, and after being so signed was by respondent delivered to and filed by the township clerk of said township of St. Joseph, and that said writing was so delivered to and filed by said township clerk on the seventh day of June, 1876. That since said seventh day of June, 1876, this respondent has not been the supervisor of said township of St. Joseph. That he has not acted or assumed to act as such supervisor in any particular. That respondent has not, since said June 7, 1876, had charge of any of the records or papers of said office of supervisor."

It does not appear that the resignation was ever acted upon by the township board, or that it was ever presented to or seen by them, or that the board was ever convened after the resignation was filed. According to the common-law rule, the resignation would not be complete, so as to take effect in vacating the office, until it was presented to the township board, and either accepted by them or acted upon by making a new appointment. A new appointment would probably be necessary in this case, because the township board was not the original appointing power. The supervisor is not their officer, representative, or appointee. They only represent the township in exercising the power, vested in them, of filling a vacancy when it occurs. This makes them the proper body to receive the resignation, because they are the functionaries whose duty it is to act upon it.

We think, therefore, that the return made to the alternative *mandamus* did not sufficiently show that the defendant had ceased to be supervisor of the township.

Other excuses for not obeying the *mandamus* are propounded in the return, as follows: —

"Respondent further says that he has never had served upon him in the cause in which said alternative writ issued, any process, notice, or paper of any kind, except said alternative writ.

"And respondent further shows that the township clerk of said township of St. Joseph has never made and delivered to respondent any certified copy of any statement on file or of record in his office of the moneys to be raised by taxation, either for the purpose of paying the alleged claim of the relator or for any other purpose, and no statement whatever of the clerk of said township with reference to the amount of money to be raised for township purposes has ever been delivered to respondent."

The plea of non-service of any other notice than the writ is inadmissible. The appearance of the defendant and the actual making of the return are a sufficient answer to it. Non-service may be good ground for a motion to set aside proceedings based on supposed service, but is not a good return to the writ.

The excuse that the clerk did not deliver to the defendant a certified statement is evasive. Why did he not do so? Was there collusion between them as stated in the petition for *mandamus?* The defendant does not state that the clerk refused to deliver him a statement; nor that he, the defendant, applied to the clerk for one. His own act, in repudiating his office, might well have prevented the clerk from delivering a statement to him. It is to be presumed that, on reassuming his duties, the clerk will recognize his official character and furnish the requisite statement. But if the clerk should refuse, it would still be the defendant's duty as supervisor to see that the claim of the relator, which is a fixed and indisputable liability of the township, and has been duly presented, is placed before the board of supervisors, and put in the way of payment by means of taxation.

We think the return was insufficient, and the demurrer was well taken.

Judgment affirmed.

THOMPSON v. UNITED STATES.

81-227
133-156

1. To a petition for a *mandamus*, to compel A., the clerk of a township, to whom had been delivered a certified copy of a judgment recovered against it to certify the judgment to the supervisor in order that the amount thereof might be placed upon the tax-roll, A. made answer, among other things, that he had resigned his office before the copy was served upon him. *Held*, that evidence that the township board had, after the cause was at issue, appointed his successor, was properly excluded.
2. Such an appointment, after the institution of the proceedings, should, if available as a matter of defence, have been set up by a plea of *puis darrein continuance* or its equivalent.
3. *Semble*, that proceedings against the clerk of a township, to enforce its duty of levying the amount of such a judgment, are against it, and do not abate by his resignation and the appointment of his successor.

ERROR to the Circuit Court of the United States for the Western District of Michigan.

The facts are stated in the opinion of the court.

Mr. H. F. Severens for the plaintiff in error.

Mr. M. J. Smiley, contra.

MR. JUSTICE BRADLEY delivered the opinion of the court.

This case arises upon a petition for a *mandamus* to compel Thompson, the township clerk of the township of Lincoln, in the county of Berrien, State of Michigan, to make and deliver to the supervisor of the township a certified copy of a judgment recovered against it by the Cambria Iron Company, the petitioner, in order to its being placed upon the tax-roll for collection and payment. The questions arising are much the same as those disposed of in the case of *Edwards* v. *United States*, *supra*, p. 471. The petition states that the Cambria Iron Company recovered judgment against the township of Lincoln, in the Circuit Court of the United States, on the 29th of May, 1876, for the sum of $6,273.32, besides costs, and caused to be delivered a certified copy thereof to Thompson, the township clerk, with a request to certify it to the supervisor, to be raised by tax on the township; but that Thompson declared that he would not do it, and pretended that there was no supervisor; that one Mitchell Spillman, who had been supervisor, had resigned; and that if there were any supervisor, still he

would not do it; that he himself had resigned, and was not clerk of the township; that the supervisor and himself had both resigned for the express purpose of defeating the collection of the petitioner's judgment, and other similar claims. The petition charges that the said supervisor and clerk have fraudulently combined to cheat and defraud the petitioner by falsely pretending to resign, whereas they actually continue to discharge the duties of their offices, — setting forth various facts corroborative of the charge.

The court below having granted a rule to show cause why a *mandamus* as prayed for should not issue, the defendant filed an answer to the petition, admitting that a judgment had been entered against the township, as stated in the petition, but averring that it was not a valid judgment, because, as the answer alleged, the court never obtained jurisdiction; that no service was ever had of process in the cause upon the supervisor of the township; that Alonzo D. Brown, upon whom service was made, was not at the time supervisor; and that, although one Clapp, an attorney, appeared for the township, he was never employed by the township; that the defendant was, it is true, duly elected clerk of the township in April, 1876, but that he resigned his office before the certified copy of the judgment was served upon him, by filing in the office of the clerk (that is, his own office) and depositing with the files of the township a written resignation addressed to the township board; and that he has not acted as clerk since. He admits that he refused to certify the judgment, but did so because he was not clerk, and because there was no supervisor, Spillman, who had been supervisor, having resigned. This answer was demurred to, but the demurrer was overruled and the cause came on for trial. The jury rendered a special verdict, as follows: —

"*First*, That on the twenty-third day of November, 1875, Alonzo Brown, upon whom the declaration was served in the original case of *The Cambria Iron Company* v. *The Township of Lincoln*, was supervisor of said township of Lincoln, and was such supervisor at the time the declaration in said cause was served upon him as such supervisor by the marshal.

"*Second*, That George S. Clapp, who entered his appearance as attorney for the defendant in said cause, and appeared

and pleaded therein for said township of Lincoln, was duly authorized by said defendant to appear and plead for it in said cause.

"*Third*, That the respondent, John F. B. Thompson, was, at the time of the service of the order to show cause why a *mandamus* should not issue against him, clerk of the said township of Lincoln, and still is such clerk, and has not resigned the said office.

"*Fourth*, That Mitchell Spillman was, at the time the said order to show cause was served, the supervisor of said township, and still holds the said office, and held the said office on October 1, A.D. 1876."

The questions raised on the trial were, as in the previous case of Edwards, whether the tender of a resignation by the supervisor or the clerk of a township, by filing the same with the clerk, was valid and effectual as a resignation, so as to discharge the officer of his official character, without an acceptance by the township board, or an appointment to fill the vacancy. Such a resignation was relied on to show that Brown, on whom process in the original action was served, was not supervisor, and that Spillman was not supervisor, and the defendant was not clerk when the present proceedings were commenced. As we have fully discussed this question in the previous case, it is not necessary to say anything further on the subject. The ruling of the court below was in conformity with our decision in that case. This also disposes of the question of the appearance of Clapp, the attorney in the original action, he having been employed by Brown, the supervisor.

Another question raised at the trial was, whether the petitioner might show the motive and intent with which the supervisor and clerk attempted to resign, with a view to show that it was done for the purpose of defrauding the petitioner, and avoiding to do those acts which were necessary to the collection of the judgment. The court allowed evidence to be given on the subject, and to this the defendant excepted. We do not see why the evidence was not admissible for the purpose of showing that the attempted resignation was simulated and fraudulent. But it is not necessary to decide this point, since the admission of the testimony did not injure the defendant,

because the attempted resignations were not completed by the acceptance of the township committee.

Another point raised was, that it appeared by the township book, offered in evidence, that the township board did appoint a successor to the defendant as township clerk on the fourth day of November, 1876, after the cause was at issue. On motion of the petitioner's counsel this evidence was stricken out for the reason that such fact having arisen since the return was made, it was not competent under the issue framed thereon. It does not appear that this matter was in any way brought to the notice of the court, or sought to be put in issue, until the evidence was offered during the trial. In addition to this, the evidence was not conclusive. It did not show that the attempted appointment was effectual. Had the point been properly put at issue, the whole matter could have been known. We think the court was justified in striking out the evidence. As a matter of defence, whether in abatement or in bar, it should have been set up by a plea *puis darrein continuance*, or its equivalent. It could not be given in evidence under any of the issues in the cause. *Jackson* v. *Rich*, 7 Johns. (N. Y.) 194; *Jackson* v. *McCall*, 8 Cow. (N. Y.) 79.

But we cannot accede to the proposition that proceedings in *mandamus* abate by the expiration of the term of office of the defendant where, as in this case, there is a continuing duty irrespective of the incumbent, and the proceeding is undertaken to enforce an obligation of the corporation or municipality to which the office is attached. The contrary has been held by very high authority. *People* v. *Champion*, 16 Johns. (N. Y.) 60; *People* v. *Collins*, 19 Wend. (N. Y.) 56; High, Extr. Rem. sect. 38. We have had before us many cases in which the writ has, without objection, been directed to the corporation itself, instead of the officers individually; and yet, in case of disobedience to the peremptory *mandamus*, there is no doubt that the officers by whose delinquency it was incurred, would have been liable to attachment for contempt. The proceedings may be commenced with one set of officers and terminate with another, the latter being bound by the judgment. *Board of Commissioners of Knox County* v. *Aspinwall*, 24 How. 376; *Supervisors* v. *United States*, 4 Wall. 435; *Von Hoffman* v. *City of Quincy*,

id. 535; *Benbow* v. *Iowa City*, 7 id. 313; *Butz* v. *City of Muscatine*, 8 id. 575; *Mayor* v. *Lord*, 9 id. 409; *Commissioners* v. *Sellew*, 99 U. S. 624; and many others.

And so, if we regard the substance and not the mere form of things, a proceeding like the present, instituted against a township clerk, as a step in the enforcement of a township duty to levy the amount of a judgment against it, ought not to abate by the expiration of the particular clerk's term of office, but ought to proceed to final judgment, so as to compel his successor in office to do the duty required of him in order to obtain satisfaction from the township. The whole proceeding is really and in substance a proceeding against the township, as much as if it were named, and is in the nature and place of an execution. If the resignation of the officer should involve an abatement, we would always have the unseemly spectacle of constant resignations and reappointments to avoid the effect of the suit. Where the proceeding is in substance, as it is here, a proceeding against the corporation itself, there is no sense or reason in allowing it to abate by the change of individuals in the office. The writ might be directed to the township clerk by his official designation, and will not be deprived of its efficacy by inserting his individual name. The remarks of Mr. Justice Cowen, in *People* v. *Collins* (19 Wend. (N. Y.) 56), are very pertinent to the case, and seem to us sound. That was a *mandamus* to commissioners of highways who were elected annually; and it was objected that their term would expire before the proceedings could be brought to a conclusion. He said: "The obligation sought to be enforced devolves on no particular set of commissioners, and no right is in question which will expire with the year. The duty is perpetual upon the present commissioners and their successors; and the peremptory writ may be directed to and enforced upon the commissioners of the town generally. To say otherwise would be a sacrifice of substance to form." In this connection we may also refer to the recent case of *Commissioners* v. *Sellew*, *supra*.

The cases in which it has been held by this court that an abatement takes place by the expiration of the term of office have been those of officers of the government, whose alleged delinquency was personal, and did not involve any charge

against the government whose officers they were. A proceeding against the government would not lie. *The Secretary* v. *McGarrahan*, 9 Wall. 298; *United States* v. *Boutwell*, 17 id. 604.

We think that the proceedings have not abated either by the resignation of the clerk and the appointment of a successor, or by the expiration of his term of office, even if it sufficiently appeared that either of these contingencies had occurred.

Judgment affirmed.

KERN v. HUIDEKOPER.

1. A party to a suit, who, under the act of March 3, 1875, c. 137 (18 Stat., pt. 3, p. 470), was entitled to its removal from the State court wherein it was brought, filed in due time his petition and the requisite bond, and prayed for such removal to the Circuit Court of the United States for the proper district. His petition was denied. *Held*, that, on his entering in the Circuit Court, within the period prescribed by that act, the transcript of the record, that court acquired jurisdiction of the suit, and that all subsequent proceedings of the State court therein are absolutely void.
2. A sheriff, to whom was directed a *fieri facias* sued upon a judgment against A., levied the writ upon certain goods and chattels, for which replevin was brought in a State court against him by B., a non-resident of the State, claiming to be the owner of them. *Held*, that there is nothing in the character of the suit which precludes its removal by B. to the Circuit Court.
3. Where a State court, proceeding to the trial of a suit which had been removed therefrom, renders judgment against the party, whose petition for a removal it erred in refusing to grant, he may raise here the question as to the jurisdiction of that court, notwithstanding the fact that he appeared at the trial and insisted upon the merits of his cause of action or defence.
4. Where a party, pursuant to leave, files a plea to the jurisdiction of the court, his former plea to the merits is thereby withdrawn.

ERROR to the Circuit Court of the United States for the Northern District of Illinois.

The facts are stated in the opinion of the court.

Mr. Edwin Walker for the plaintiff in error.

Mr. Henry Crawford, *contra*.

MR. JUSTICE WOODS delivered the opinion of the court.

This was an action of replevin brought by Frederick W. Huidekoper, John N. Dennison, and Thomas W. Shannon, in

the Circuit Court of Cook County, Illinois, at its May Term. 1877, to wit, on May 22, 1877, against Charles Kern, to recover the possession of one thousand tons of old railroad iron, which as they claimed he wrongfully detained from them.

The writ of replevin, issued May 23, 1877, was on the same day served by the coroner of the county, who received from the plaintiffs a statutory bond, and delivered to them the possession of the iron. The summons was made returnable at the next term of the court, which began on the third Monday of June.

The declaration, which was filed June 30, alleged that plaintiffs were the owners and lawfully entitled to the possession of certain goods and chattels, to wit, the iron in controversy, which formerly had been in the track of the Chicago, Danville, and Vincennes Railroad, but that it was then lying along the Mud Lake track, near Twenty-fourth Street, in the city of Chicago; that it was of the value of $18,000; that on May 9, 1877, Kern had wrongfully taken possession of it, and still detained the same from them.

Kern, July 6, 1877, pleaded that he was the sheriff of Cook County, and that as such, May 1, 1877, he had levied on and still held the iron, by virtue of two certain executions against the Chicago, Danville, and Vincennes Railroad Company, both issued upon judgments in the Superior Court of Cook County, — one in favor of the Bank of North America, and the other in favor of John McCaffrey, for the aggregate sum of about $11,000; and that at the time of the levy the iron was the property of that company.

On May 31, 1877, the plaintiffs filed in the court their petition to remove said cause to the Circuit Court of the United States for the Northern District of Illinois. The petition alleged that Kern was a citizen of the State of Illinois, and that the plaintiffs at the institution of the action were, and still continued to be, citizens of States other than Illinois; that the amount in controversy in the suit exceeded $500; that there had been no trial of the suit, and the same could not have been tried before the term at which said petition was filed; and that the suit involved a controversy between citizens of different States, which could be wholly determined as between them.

The petition was accompanied by the bond required by the statute of the United States.

On June 2, the court denied the petition for removal, on the ground that it was prematurely presented and filed; that at that date no declaration had been filed, the defendant was not in court, and was not required to appear until the third Monday of June.

On June 30, the petition of the plaintiffs and their bond for the removal of the cause being still on file, and the time for the appearance of the defendant having passed, the plaintiffs filed their declaration, and immediately moved the court for an order transferring the cause, in accordance with their petition, to the Circuit Court of the United States. This motion was denied.

On July 6, the date upon which the defendant filed his plea, and after said plea had been filed, the plaintiffs caused an order to be entered dismissing their petition for the removal of the cause filed May 31, and immediately filed another for the same purpose, containing the same averments, together with a bond, as required by the statute.

This petition was also denied by the State court.

Nevertheless, on July 27, 1877, the plaintiffs filed a transcript of the record of the cause in the clerk's office of the Circuit Court of the United States for the Northern District of Illinois. The term of that court, as prescribed by law, began on the first Monday of that month.

On Nov. 14, 1877, the said term still continuing, that court made an order approving the filing of the said record on July 27 preceding.

On June 5, 1878, the counsel of the plaintiffs moved that court that an order be entered declaring that the cause had been removed from the Circuit Court of Cook County, and that the Circuit Court of the United States had exclusive jurisdiction thereof by reason of such removal, and that the cause be placed on the trial calendar of the court. The court sustained the motion, and directed an order to be made in accordance therewith.

On June 26, 1878, the defendant, by his attorney, entering special appearance for that purpose, filed a written motion in

the United States Circuit Court for the dismissal of said action. This motion was overruled.

At the July Term, 1878, of the Circuit Court of Cook County, that court still claiming jurisdiction of the cause, notwithstanding the proceedings for its removal above recited, the plaintiffs filed in that court a replication to the plea of the defendant, in which they alleged that said railroad iron at the time of the levy was the property of the plaintiffs, and not of the railroad company, as alleged in defendant's plea.

On Nov. 12, 1878, the defendant moved in the Circuit Court of the United States for leave to file a plea to the jurisdiction, which, after argument of counsel, was granted. Thereupon, on the same day, he filed the following plea: —

"The defendant, by E. Walker, his attorney, comes and prays judgment of the said record herein filed, because he says that the plaintiffs first instituted their said action of replevin in the Circuit Court of Cook County, in the State of Illinois, which said court has exclusive original jurisdiction of said action, and caused the clerk of said State court to issue a summons against the said defendant and a writ of replevin, under which said last-named writ the property described in said writ and declaration was seized by the officer of said court and delivered to the said plaintiffs.

"That said writs were made returnable to the June Term of said court, A.D. 1877, at which said term the said defendant appeared and filed his plea to said declaration.

"The said defendant further shows that long after the filing of the said transcript of record in this court the said plaintiffs, to wit, at the May Term, A.D. 1878, filed in the said Circuit Court of Cook County their replication to the said defendant's plea, and at said term of said State court prosecuted their said action to a final hearing; and such proceedings were thereupon had in said action that afterwards, to wit, at said May Term, to wit, on the fifth day of June, A.D. 1878, the said defendant, by the consideration and judgment of the said Circuit Court of Cook County, recovered a judgment against the said plaintiffs for the return to him of the property described in said declaration and writ of replevin, being the same identical property described in the aforesaid transcript of record, and for his costs

in said action, as by the record and proceedings thereof still remaining in said Circuit Court of Cook County more fully appear, which said judgment is in full force, unreversed and unsatisfied, and this the defendant is ready to verify by the record. Wherefore the said defendant prays judgment if the court here will take jurisdiction and cognizance of the action aforesaid."

The plaintiffs filed a demurrer to this plea, and afterwards, on Nov. 21, 1878, the demurrer was argued. The minutes of the court state its judgment upon the demurrer as follows: —

"Now come the plaintiffs by Henry Crawford, Esq., their attorney, and the defendant by Edwin Walker, Esq., his attorney, and now comes on to be heard the demurrer of the plaintiffs to the plea to the jurisdiction herein, and after hearing the arguments of counsel the court sustains the demurrer, to which ruling of the court the defendant by his counsel excepts, and the defendant failing to make further answer herein, and electing to abide by his said plea, it is thereupon considered by the court that the plaintiffs have and retain possession of the goods and chattels described in the writ issued in this court," &c.

This judgment Kern seeks to reverse in this court.

The following are his assignments of error: —

That the Circuit Court erred —

1. In overruling the motion made by the plaintiff in error on June 26, 1878, to dismiss the said cause.

2. In sustaining the demurrer to the special plea filed by the plaintiff in error on Nov. 12, 1878.

3. In rendering judgment against the plaintiff in error upon the demurrer.

4. The court had no jurisdiction over the subject-matter of the action.

The Circuit Court of Cook County and the Circuit Court of the United States both claimed jurisdiction of the case, and each rendered a final judgment, — the State court in favor of the plaintiff in error, and the United States court in favor of the defendants in error.

Most of the points raised upon the record will be solved by a settlement of the question, which court had jurisdiction of the case when said final judgments were rendered.

The jurisdiction was, of course, originally in the State court. It is unnecessary to decide whether the State court rightfully or wrongfully denied the first two petitions of the defendants in error for the removal of the cause. The petition for its removal, filed July 6, 1877, contained every averment required by law. It was filed at the proper time, and it was accompanied by a bond with good and sufficient surety, conditioned according to the statute.

According to the terms of the act of Congress it was the duty of the State court "to accept said petition and bond and proceed no further in such suit." Act of March 3, 1875, c. 137, sect. 3; 18 Stat., pt. 3, p. 470.

Notwithstanding the refusal of the State court to make an order for the removal of the cause, the defendants in error, within the time prescribed by the statute, filed a transcript of the record of the State court in the Circuit Court of the United States. This invested the latter court with full and complete jurisdiction of the case, for, in the language of the section just referred to, "the said copy being entered as aforesaid in said Circuit Court of the United States, the cause should then proceed in the same manner as if it had been originally commenced in said Circuit Court."

If the cause is removable and the statute for its removal has been complied with, no order of the State court for its removal is necessary to confer jurisdiction on the court of the United States, and no refusal of such an order can prevent that jurisdiction from attaching. *Insurance Company* v. *Dunn*, 19 Wall. 214.

It is, therefore, clear that when the defendants in error filed, July 27, 1877, in the Circuit Court of the United States a transcript of the record of the State court, the former acquired and the latter lost jurisdiction of the case.

The contention of the plaintiff in error seems to be, that an action of replevin, where the sheriff of a State court is the defendant, is not removable, because the sheriff, an officer of the State court, being in possession of the property, the subject-matter of the controversy, the Federal court is without legal authority or power by writs, process, or orders to wrest its possession from him.

There is no support either in the act of Congress for the removal of causes, nor in any case adjudged by this court, for this position.

The act of Congress makes no exception of causes where the subject-matter of the controversy is in possession of the State court. Under the Constitution and laws of the United States a citizen of the United States, party in a State court to a suit which falls within the terms of the statute for the removal of causes, has the right to have it removed to and heard by a United States court.

Taylor v. *Carryl* (20 How. 583), *Freeman* v. *Howe* (24 id. 450), and *Buck* v. *Colbath* (3 Wall. 334), relied on by the plaintiff in error, are not in point.

Those cases decide that property held by an officer of one court by virtue of process issued in a cause pending therein, cannot be taken from his possession by the officer of another court of concurrent jurisdiction, upon process issued in another case pending in the latter court.

But here there is but one case. It is brought in the State court. It falls within the terms of the act of Congress for the removal of causes. When the prerequisites for removal have been performed, the paramount law of the land says that the case shall be removed, and the case and the *res* both go to the Federal court. The fact that the State court, while the case was pending in it, had possession of the subject-matter of the controversy, cannot prevent the removal, and when the removal is accomplished, the State court is left without any case, authority, or process by which it can retain possession of the *res*. The suit and the subject-matter of the suit are both transferred to the Federal court by the same act of removal, or when a bond for the delivery of the property has been taken, as in this case, the bond as the representative of the property is transferred with the suit. There is no interference with the rightful jurisdiction of the State court, and no wresting from its possession of property which it has the right to retain.

If the contention of the plaintiff in error is that the State court, having seized property by virtue of a *fieri facias* issued on a judgment rendered by it, the Federal court cannot take

such property from its possession by writ of replevin, or, in other words, that the replevin suit which was sought to be removed in this case, could not have been originally brought in the Federal court, the answer is that, upon the question of removal, it is entirely immaterial whether or not the suit, as an original action, could have been maintained in the Federal court. In short, no provision of the State law, no peculiarity in the nature of the litigation which would forbid the United States court from entertaining original jurisdiction, could prevent the removal, provided the case fell within the terms of the statute for the removal of causes. *Railway Company* v. *Whitton*, 13 Wall. 270; *Insurance Company* v. *Morse*, 20 id. 445; *Gaines* v. *Fuentes*, 92 U. S. 10; *Boom Company* v. *Patterson*, 98 id. 403.

The United States court having acquired jurisdiction, and the State court lost it by the proper removal of the cause, has the State court been reinvested with jurisdiction by the facts stated in the plea to the jurisdiction filed by the defendant below, namely, that long after the removal of the cause to the United States court, the plaintiffs below filed their replication in the State court, and prosecuted their action therein to a final hearing? In other words, is the plea to the jurisdiction of the United States court, filed by the defendant below on Nov. 12, 1878, a good plea?

It has been expressly held by this court that when a case has been properly removed from a State into a United States court, and the State court still goes on to adjudicate the case, against the resistance of the party at whose instance the removal was made, such action on its part is a usurpation, and the fact that such a party has, after the removal, contested the suit, does not, after judgment against him, constitute a waiver on his part of the question of the jurisdiction of the State court to try the case. *Insurance Company* v. *Dunn*, 19 Wall. 214; *Removal Cases*, 100 U. S. 457; *Railroad Company* v. *Mississippi*, 102 id. 135.

These cases are directly in point. In the action of replevin the defendant, if he succeeds, recovers in effect the same judgment against the plaintiff as the plaintiff, in case he succeeds, recovers against the defendant. So that the plaintiffs, in con-

testing the suit in the State court after its removal, were seeking to protect themselves against a judgment in favor of the defendant for the return of the property in controversy, a judgment which was in fact entered against them.

Our conclusion, therefore, is that by the proceedings for the removal of this case jurisdiction over it was transferred to the United States Circuit Court, and the filing by the plaintiffs below of a replication in the State court, after such removal, and the prosecution of the action to a final hearing in that court, did not reinvest the State court with jurisdiction of the cause, nor amount to a waiver of any rights resulting to the plaintiffs from the removal.

This conclusion is strengthened by the fact that the plaintiffs constantly insisted, as the record shows, upon the jurisdiction of the United States court over the case, and even while the case was on final trial in the State court, procured the entry of an order in the United States court to the effect that, upon the filing of the transcript of the record of the State court in the United States court, the latter court acquired exclusive jurisdiction over the case.

After the filing in the United States Circuit Court, on July 27, 1877, of the record of the proceedings in the State court, the latter lost all jurisdiction over the case, and, being without jurisdiction, its subsequent proceedings and judgment were not, as some of the State courts have ruled, simply erroneous, but absolutely void. *Gordon* v. *Longest*, 16 Pet. 97; *Insurance Company* v. *Dunn*, 19 Wall. 214; *Virginia* v. *Rives*, 100 U. S. 313.

It only remains to consider the contention of the plaintiff in error that the court below should not have entered judgment against him after sustaining the demurrer to his plea to the jurisdiction filed Nov. 12, 1878, because there was still remaining his plea to the merits filed July 6, 1877, before the case was removed from the State court.

The facts disclosed by the record make it clear that there is no solid ground for this assignment to stand on.

The plea of Nov. 12, 1878, was a plea to the jurisdiction. The defendant was allowed to file it on special leave asked by him and given by the court.

The asking of leave to plead to the jurisdiction was in effect a withdrawal of the plea to the merits, for after a plea in bar the defendant cannot plead to the jurisdiction of the court; for by pleading in bar he submits to the jurisdiction. 1 Chitty, Pleading, 440, 441; Co. Lit. 303; Com. Dig., Abatement, C.; Bacon, Abr., Abatement (A.).

The plea in bar being in effect withdrawn by the plea to the jurisdiction, when the demurrer to the latter was sustained the defendant was left without plea.

If the defendant had so desired, the judgment of the court would have been *respondeat ouster*. But he elected, as the record shows, to stand by his demurrer and declined to make any further answer. There was nothing then left for the court to do but to pronounce judgment against him, which was done.

There was no error in this. The suggestion that there should have been a trial upon the plea in bar appears to have been an afterthought.

There is no error in the record.

Judgment affirmed.

DIETZSCH v. HUIDEKOPER.

1. *Kern* v. *Huidekoper* (*supra*, p. 485) cited and approved.
2. After the plaintiff removed to the proper Circuit Court of the United States a suit in replevin brought in a State court, the latter proceeded to try it and render judgment for a *retorno habendo*. An action having been thereupon brought in the State court against him and his sureties on the replevin bond, they filed their bill in the Circuit Court, praying that the plaintiff in that action be enjoined from further prosecuting it. *Held*, that the Circuit Court properly granted the prayer of the bill.
3. The ruling in *French, Trustee*, v. *Hay* (22 Wall. 250) reaffirmed.

APPEAL from the Circuit Court of the United States for the Northern District of Illinois.

The facts are stated in the opinion of the court.

Mr. Edwin Walker for the appellants.

Mr. Henry Crawford, contra.

MR. JUSTICE WOODS delivered the opinion of the court.

After the recovery of the judgment at law, on June 5, 1878, by Charles Kern, one of the appellants, in the Circuit Court for the County of Cook, in the action of replevin mentioned in *Kern* v. *Huidekoper*, *supra*, p. 485, notwithstanding the removal of the said cause to the Circuit Court of the United States for the Northern District of Illinois, the writ of *retorno habendo* was issued thereon, which the plaintiffs in the replevin suit refused to obey. Thereupon, on June 7, 1878, an action of debt upon the replevin bond given by them was begun in the Circuit Court of Cook County against Frederick W. Huidekoper, Thomas W. Shannon, and John Dennison, the principals, and A. B. Meeker and John B. Drake, the sureties on said bond.

The action was brought in the name of Emil Dietzsch, the coroner, for the use of Charles Kern, the sheriff, who was nominally interested only, the real interest in the litigation being in the judgment and execution creditors, the Bank of North America and John McCaffrey.

Thereupon Huidekoper, Shannon, and Dennison, on June 10, 1878, filed the bill in this case in the United States Circuit Court for the Northern District of Illinois, against Dietzsch and Kern, in which they prayed an injunction to restrain them, their attorneys, agents, &c., and the execution creditors represented by them, from prosecuting any suit upon said replevin bond against the principals or sureties therein, "or in any manner whatever taking any action to enforce any liability or right upon said pretended judgment of return entered in said Circuit Court of Cook County or upon the said replevin bond."

On July 1, 1878, a preliminary injunction was allowed restraining the defendants below from in any manner prosecuting said action upon the replevin bond, or in any manner enforcing said judgment of return.

After the filing of this bill the action on the replevin bond in the State court was dismissed as to all the defendants except John B. Drake.

On Oct. 20, 1879, the complainants below filed their supplemental bill, in which they alleged that on Oct. 1, 1879, on

motion of William J. Hynes, an order was entered in the Circuit Court for Cook County in the said suit, brought in the name of Emil Dietzsch on said replevin bond, against complainants and their sureties, by which the Bank of North America and John McCaffrey were substituted for Dietzsch as parties plaintiff in said action, and an amended declaration was filed by them as such plaintiffs, and a rule was entered against Drake requiring him to plead to such amended declaration within twenty days.

The supplemental bill charged that the Bank of North America and John McCaffrey, and Edwin Walker, their attorney, had personal knowledge of the allowance and issue of said injunction, and that the judgment in favor of the Bank of North America was the property of Walker, and that the proceedings in said action of debt were in violation of the injunction of the court and taken for the purpose of evading its orders, and prayed that the Bank of North America, McCaffrey, Walker, and Hynes might be made parties defendant to the bill, and that the injunction allowed upon the original bill might be so enlarged as to include the said new defendants.

Thereupon the Bank of North America, McCaffrey, Walker, and Hynes appeared and filed their demurrer to the original and supplemental bills, alleging as grounds of demurrer that the court had no jurisdiction to enjoin proceedings in the Circuit Court of Cook County, Illinois, as prayed for in said original and supplemental bills.

The demurrer was overruled. The defendants who demurred, electing to stand by their demurrer, declined to plead or answer. Thereupon a decree *pro confesso* was taken against them, and a final decree was made against all the defendants, by which the preliminary injunction allowed in the case was made absolute and perpetual.

That decree is brought here by appeal.

We have already decided in *Kern* v. *Huidekoper*, *supra*, that the suit in replevin, instituted by Huidekoper and others against Kern in the Circuit Court for Cook County, was removable to the United States Circuit Court; that by the proceedings for that purpose it was effectually removed on July 27, 1877, to the Federal court, which after that date alone had jurisdiction

thereof, and that all the subsequent proceedings in the cause in the State court were absolutely null and void.

Upon this state of facts, the only question for decision is, Could the court below enjoin the appellants from proceeding in the action at law, brought by them on the replevin bond in the Circuit Court for Cook County?

The action on the bond in that court was simply an attempt to enforce the judgment of that court in the replevin suit, rendered after its removal to the United States Circuit Court, and after the State court had lost all jurisdiction over the case. If no judgment had been rendered in the State court against the plaintiffs in the suit, no action could have been maintained upon the bond. The bond took the place of the property seized in replevin, and a judgment upon it was equivalent to an actual return of the replevied property. The suit upon the bond was, therefore, but an attempt to enforce a pretended judgment of the State court, rendered in a case over which it had no jurisdiction, but which had been transferred to and decided by the United States Circuit Court, by a judgment in favor of the plaintiffs in replevin.

The bill in this case was, therefore, ancillary to the replevin suit, and was in substance a proceeding in the Federal court to enforce its own judgment by preventing the defeated party from wresting the replevied property from the plaintiffs in replevin, who, by the judgment of the court, were entitled to it, or what was in effect the same thing, preventing them from enforcing a bond for the return of the property to them.

A court of the United States is not prevented from enforcing its own judgments by the statute which forbids it to grant a writ of injunction to stay proceedings in a State court. Dietzsch, the original plaintiff in the action on the replevin bond, represented the real parties in interest, and he was a party to the action of replevin, which had been pending, and was finally determined in the United States Circuit Court. That court had jurisdiction of his person, and could enforce its judgment in the replevin suit against him, or those whom he represented, their agents and attorneys. The bill in this case was filed for that purpose and that only.

If the bill is not maintainable, the appellees would find themselves in precisely the same plight as if the judgment of the United States Circuit Court in the replevin suit had been against them, instead of for them. The judgment in their favor would settle nothing. Instead of terminating the strife between them and their adversaries, it would leave them under the necessity of engaging in a new conflict elsewhere. This would be contrary to the plainest principles of reason and justice.

As the bill in this case is filed for the purpose of giving to litigants on the law side of the court the substantial fruits of a judgment rendered in their favor, it is merely auxiliary to the suit at law, and the court has the right to enforce the judgment against the party defendant and those whom he represents, no matter how or when they may attempt to evade it or escape its effect, unless by a direct proceeding. These views are sustained by the case of *French*, *Trustee*, v. *Hay* (22 Wall. 250), between which and this case there is no substantial difference.

We think, therefore, that the demurrer to the bill was properly overruled.

Decree affirmed.

COUNTY OF MORGAN v. ALLEN.

131-330
" 334
" 366
135-544
39f-12
129-110
" 125
" 427

1. Where a county subscribed to the capital stock of a railway company, and issued its bonds therefor, the creditors of the company, on its becoming insolvent, are entitled to enforce the liability of the county on the bonds which are due and unpaid.
2. The court reaffirms the doctrine announced in *Sawyer* v. *Hoag* (17 Wall. 619) and subsequent cases, that the assets of an insolvent company, including the moneys due from a shareholder on his subscription to its capital stock, constitute a fund for the payment of its creditors, and that he cannot, to their prejudice, be released from his liability by any arrangement between it and him which is not fair and honest and for a valuable consideration. The doctrine is applicable where the debt created by the subscription of a county is evidenced by its bonds, and they were surrendered to it in fraud of the rights of creditors, although the surrender was made pursuant to a consent decree in a suit to which they were not parties.
3. In consideration of the facts and of the decisions of the Supreme Court of

Illinois, in cases involving the same question, the court holds that the subscription by the county court, on behalf of the county of Morgan in that State, to the capital stock of the Illinois River Railroad Company, is valid, and that the bonds, having, by its order and in conformity with the terms of its subscription, been delivered to the company, are binding upon the county, and constitute a part of the assets of the company to which its creditors can resort for payment.

4. The trustees named in a deed of mortgage executed by that company, to secure the holders of its bonds, brought a foreclosure suit, and, under the decree rendered, became the purchasers of the mortgaged property, which they conveyed to a new company chartered by the legislature. In a suit in a State court, to which they were made defendants, they set up that they were entitled to the possession of the county bonds for delivery to the new company. *Held*, that a decree against them does not estop the creditors of the old company, who were secured by that mortgage, from asserting their right to subject the county bonds to the payment of their claims, the proceeds of the sale of the mortgaged property being insufficient for the purpose.

APPEAL from the Circuit Court of the United States for the Southern District of Illinois.

The County Court of Morgan County, in the State of Illinois, at its December Term, 1856, in pursuance of authority conferred by statute (Private Laws Illinois, 1853, p. 53; id., 1854, p. 207), and in accordance with a vote of the people at an election previously held, entered upon its records a subscription, unconditional in form, of the sum of $50,000, payable in bonds of the county, to the capital stock of the Illinois River Railroad Company, a corporation created by the laws of Illinois, with power to construct a railroad from Jacksonville, in Morgan County, *via* the towns or cities of Virginia, Bath, Pekin, and Lacon, to La Salle, in La Salle County. At the same time, by an order of record, authority was given the county judge to act in regard to such subscription as might be necessary, according to the charter, rules, or by-laws of the company, to perfect the same, to represent the county in voting upon the stock, and to provide for the issuing and delivery of the bonds as they might be required.

By an act passed Jan. 29, 1857, the vote taken was declared to have been legally taken, and the county court was required to subscribe the stock and to issue bonds therefor. Shortly thereafter a subscription, unconditional in form, was made by the proper county officers on the books of the company. The

bonds were not issued immediately, and application therefor was made by R. S. Thomas, the president of the company. In order to meet some objections urged against their immediate issue, that officer (upon his own responsibility, so far as the evidence discloses) filed with the county clerk a certificate stating that the part of the railroad north of the town of Virginia was then in process of construction and that the part between Jacksonville and Virginia was "under contract to be completed by the 1st of December, 1858, and that it is provided in the contract for the construction of said road that the Morgan County bonds are to be expended for work done in Morgan County, and not elsewhere." The county court, at its September Term, 1857, thereupon entered of record an order, which, after reciting, among other things, the execution of that certificate, and that the interest and advantage of the county would be promoted by the delivery of the bonds theretofore subscribed, directed "that there be delivered to the Illinois River Railroad Company the amount of $50,000 of the bonds of this county of this date," &c.; also, that the certificate of stock "be deposited with the treasurer of the county for safe keeping," &c.

The bonds were thereupon issued, and deposited by the county judge with Elliott & Brown, bankers, for the railroad company. The evidence is conflicting as to whether the bankers were instructed to hold them until the further order of the county court, or to deliver them to the company upon receiving the certificate of stock for the county. The records of the court indicate an absolute unconditional delivery; and the weight of the evidence supports such a delivery.

In 1859, the bonds still being in the custody of Elliott & Brown, the company gave Allen & McGrady, contractors, two orders for $2,000 each for work done by them outside of Morgan County, but payable on their face in Morgan County bonds. These were subsequently transferred for value to William Thomas.

Vail & Ladd, creditors of the Illinois River Railroad Company, having obtained against it judgments amounting in principal and interest to $7,008.10, and sued out executions which were returned *nulla bona*, instituted garnishee proceedings

to obtain satisfaction of the judgments out of the bonds in the hands of Elliott & Brown. The latter thereupon filed a bill of interpleader in the Circuit Court of Morgan County, against Vail & Ladd, the Illinois River Railroad Company, the county of Morgan, Studwell, Hopkins, and Cobb (trustees in a mortgage executed Nov. 1, 1858, by the company to secure its bonds amounting to $1,020,000), R. S. Thomas (who held an acknowledged debt against the company of $16,502.24, payable out of any funds belonging to the company), and William Thomas, the holder of the two orders issued to Allen & McGrady.

By an interlocutory decree entered in that case, the bonds, after deducting $200 interest coupons for charges and solicitors' fees, were placed in the custody of Ayres & Co., to await the further order of the court. In that suit the county denied its liability upon the ground that no work had been done in Morgan County, and that by agreement between it and the company the latter was not entitled to the bonds except for work done by it in that county. The trustees named in the trust deed of 1858, in their answer, claimed that they were entitled to hold the bonds for the use and benefit of the Peoria, Pekin, and Jacksonville Railroad Company as the successor of the Illinois River Railroad Company, to be used by the former in the construction of the road in the county of Morgan, in accordance with the alleged agreement that they should be so used. Upon final hearing, the bills of all the parties interpleading were dismissed, but the court directed that the bonds remain in the custody of Ayres & Co. All the parties except the county of Morgan took an appeal to the Supreme Court, which held: *First*, That whether the bankers had notice or not of the certificate executed by R. S. Thomas, as president of the company, it showed an understanding, at least between the county and him, as to the use of the bonds for work to be done in Morgan County, and his claim, as a creditor, should not be allowed in violation of that understanding. *Second*, As to the claim of William Thomas, he was affected by the notice disclosed in the contract between Allen & McGrady, which provided for the payment of their claims by these bonds only for work done in Morgan County. *Third*, That the claims of Vail & Ladd stood upon an entirely

different footing; that they were creditors of the company for ties furnished, and had no notice of the condition upon which the bonds were issued; that they only knew that the county had subscribed to the stock and issued them; that any agreement or understanding between the company and the county, of which they had no knowledge, and the effect of which would be to place the bonds beyond their reach as creditors, would be fraudulent as to them; that the county subscription and the absolute order of the county court directing the issue and delivery of the bonds may have induced them to give credit to the company; that while, as against the president and Allen & McGrady, who had notice of the specific purpose for which the bonds were to be used, the county might insist that the delivery was qualified, it could not do so as to those creditors; that, "as to them, it cannot prove that the delivery was not as absolute as its records indicated; they had a right to regard the bonds as assets in the hands of the company." *Fourth*, The trustees, Studwell, Hopkins, and Cobb, having failed to assign errors, the court did not consider the propriety of the decree as to them. *Thomas et al.* v. *County of Morgan*, 39 Ill. 496.

Upon the return of that cause to the inferior State court a decree was entered (by consent of the creditors, Vail & Ladd, and the county) by which the county obtained possession of its bonds of the nominal value of $17,832.18, with coupons attached, in consideration of its paying off the judgments of Vail & Ladd, amounting to the sum already stated. The coupons alone exceeded in amount and value the debts of those creditors.

A suit in equity subsequently instituted by William Thomas, as the assignee of the orders issued in favor of Allen & McGrady, raised the question as to whether he was not entitled to be paid out of the county bonds, inasmuch as the road had then been finally constructed in the county by the successors of the first company. It proceeded upon the ground that such construction, for all the purposes for which the stock was subscribed, was equivalent to a construction by the original company. He alleged in his bill that certain judgment creditors of the railroad company who had filed a bill in chancery in the

Morgan Circuit Court, made as defendants thereto only the Illinois River Railroad Company, the county of Morgan, and Ayres & Co., for the purpose of subjecting to those judgments the county bonds left in the custody of Ayres & Co. Although the complainants knew he was interested in the disposition of the bonds; that by an agreement between those creditors and the county, which was carried into decree by a collusive arrangement, the county, by paying only $6,000 in cash and about $6,000 in bonds in full satisfaction of the claims of those creditors, had received from Ayres & Co. $32,500 in nominal value of its bonds, with coupons attached (the latter alone exceeding the amount of the debts thus paid off), and had cancelled the same. To the bill a demurrer was interposed by the county, which being sustained, the bill was dismissed. Thomas appealed to the Supreme Court of Illinois. The case is reported as *Thomas* v. *County of Morgan*, 59 Ill. 479. The court in that case, speaking by Chief Justice Breese, said: —

"It is undeniable that the moving cause for the subscription, the real motive, was the construction of the road in Morgan County. It did not matter to the county by what particular agencies the road should be made, — it was sufficient that it was made. The stipulation must be construed with reference to its object and substance. The object was to secure the road in Morgan County. Had the company built the road out of its general assets, it is very certain they could have demanded the bonds. The sense of the stipulation is, not that these identical bonds shall pay for work done in Morgan County, but it is, if the work is done in the county the bonds shall be delivered. The fact that the road has been completed from Virginia to Jacksonville is a substantial performance of the condition upon which the bonds were issued, and the Allen & McGrady orders for $4,000 of them, drawn by the company, which have honestly come into the possession of the appellant, operated as an equitable transfer of so much of the county subscription from the railroad company to the appellant."

In another part of the opinion the court said: —

"Upon the theory that these bonds are a trust fund in the custody of the court, it is the duty of the court to see that it is

not wasted or misapplied, as the demurrer admits it has been, in the respects alleged in the bill of complaint.

"It is not denied that the parties prosecuting that suit agreed to receive from the county, in full satisfaction of their claims, the sum of $6,000 in cash and $6,360 of these bonds. There were then in the hands of the custodian, Ayres & Co., bonds of the nominal value of $32,500. These were surrendered, by the custodian, to the solicitor of the complainants in that action, in discharge of an indebtedness of only $12.360. This, without explanation, is a wasting and misappropriation of the fund, which a court of chancery can and ought to correct."

The decree was reversed, with directions to require an answer to the bill.

Upon the return of the cause the county filed an answer, claiming that its bonds had all been cancelled except those disposed of pursuant to the previous decrees of the court. That cause was consolidated subsequently with the suit of *Morgan County* v. *The Peoria, Pekin, & Jacksonville Railroad Company*, in which the county sought to recover from that company the possession of some of the bonds which had gone wrongfully, as claimed by the county, into its custody. From the final decree in that case the county prosecuted an appeal to the Supreme Court of Illinois. That case is reported as *Morgan County* v. *Thomas*, 76 Ill. 120. The court re-examined the grounds of the previous decisions, and, among other things, adjudged in that case —

First, That the claim of William Thomas should be sustained, not for the reason that the supposed condition upon which the bonds were placed in the custody of Elliott & Brown was performed, "but because no such condition, so far as the stockholders and creditors of the Illinois River Railroad Company, including Mr. Thomas, were concerned, ever existed. The subscription which the county court was authorized to make for capital stock in the Illinois River Railroad Company by the vote of the people, and the subsequent enactment of the legislature, was not conditional, but absolute, and the subscription made pursuant to this authority was unconditional. It was made prior to any issue of bonds, and when made, the contract between the county on the one side and the railroad company

on the other was complete. The county was then legally bound to issue and deliver its bonds to the company in conformity with the terms of its subscription, and upon its doing so, the company was bound to deliver to the county the requisite certificate showing that it was the owner of the number of shares subscribed for in its capital stock. This claim for unpaid subscription then became a part of the assets of the company. Creditors might rely upon it for payment of their debts as implicitly as upon any other assets of the company, and this, too, although the company, subsequently to the making of the subscription, may have abandoned all proceedings under its charter, on account of its insolvency."

Second, "The subscription being absolute in its terms, and, therefore, constituting a part of the assets of the company, R. S. Thomas had no authority, simply as president of the company, to consent that it should become conditional; nor could the county make such claim as a matter of right."

Third, "The Peoria, Pekin, and Jacksonville Railroad Company acquired no claim to the Morgan County bonds at the sale under the deed of trust, because they were neither expressly nor by necessary implication included within its terms;" that "the bonds, then, remaining as assets of the Illinois River Railroad Company, could not have been donated by the county to the Peoria, Pekin, and Jacksonville Railroad Company. Nor was it competent for the legislature, by enactment, to make such donation. They were a trust fund, to be held for the payment of the debts of the company to which they belonged, and this, even if the failure of that corporation to exercise its corporate powers had worked its dissolution."

It thus appears that the county, by the payment of a little over $19,000 to certain creditors of the Illinois River Railroad Company, attempted, to the prejudice of other creditors, to discharge its own indebtedness to that insolvent corporation, represented by bonds of the nominal value of about $50,000, with coupons attached, the latter alone exceeding the claim of the particular creditors thus paid off.

In pursuance of authority conferred by its charter, the Illinois River Railroad Company conveyed, by way of mortgage,

dated Nov. 1, 1858, to Alexander Studwell, Lucius Hopkins, and George S. Cobb, as trustees, all of its corporate property, real and personal, franchises and effects, acquired and to be acquired, including all rents, issues, income, profits, moneys, rights, and advantages, derived and to be derived therefrom, in trust to secure the payment of one thousand three hundred and twenty bonds, aggregating the sum of $1,020,000, and payable in New York on the first day of January, 1880, with semi-annual interest at the rate of ten per cent per annum.

The deed provided that, if the company failed at any time to meet the annual interest on the bonds, all of them might be treated as matured obligations, and the mortgaged property, in that event, should be surrendered to the trustees, to be owned, operated, and held for the use and benefit of the holders of the bonds.

The company failed to pay the interest when due, after having constructed only the part of the road between Pekin, in Tazewell County, and Virginia, in Cass County. Its board of directors, at a meeting held on the 12th of July, 1862, ordered a surrender of the mortgaged property to the trustees. It then suspended all further operations, and ceased to discharge its functions. The trustees took possession by an agent, and, on the 17th of December, 1862, instituted a suit for foreclosure in the court below.

By an act of assembly passed June 11, 1863, Studwell, Hopkins, and Cobb, trustees, and Allen, Arnold, and Trowbridge, holders of the bonds secured by the deed of trust, and their associates, who should thereafter become purchasers of the mortgaged property under any decree of foreclosure, were constituted a corporation, under the name of the Peoria, Pekin, and Jacksonville Railroad Company, with power to purchase that property, and, upon receiving a proper transfer thereof, to have and be vested with all the corporate powers, privileges, immunities, and franchises theretofore given or granted to the Illinois River Railroad Company.

A final decree was rendered in the foreclosure suit, from which it appears that the principal and interest, then due and unpaid, of the bonds was $1,419,666. A sale thereunder was made on the 1st of October, 1863, to Allen, Arnold, and Trow-

bridge, at the price of $400,000, and was duly confirmed. A further decree was entered in June, 1864, against the company for the sum of $1,061,292.56, the balance then due upon the debt after crediting the proceeds of sale.

Shortly before the last decree the purchasers at the sale conveyed and transferred the railroad, franchises, and property of the company to the Peoria, Pekin, and Jacksonville Railroad Company, which thereafter completed the road from Virginia, in Cass County, to Jacksonville.

The present suit in equity was instituted by Allen, Arnold, and Trowbridge, the holders jointly of all the bonds secured by the trust deed, and, therefore, the equitable owners of the decree in the foreclosure suit, for the purpose mainly of subjecting to that decree such amount as was due from the county of Morgan upon its subscription, to the capital stock of the Illinois River Railroad Company. The bill proceeds upon the ground that the bonds issued for the subscription were a part of the assets of that corporation, constituting a trust fund to which its creditors could resort for the satisfaction of their debts. Before the commencement of this suit the county had obtained possession of and destroyed or cancelled its bonds. It denied all liability to the complainants, as creditors of the company, by reason of the alleged subscription, or upon any other ground. The complainants contended that the county obtained possession of the bonds in fraud of their rights as creditors of the company, and that, to the extent it had not, in fact, paid the amount due upon the bonds given for the subscription, but remained, notwithstanding their cancellation, liable to the creditors of the company. In that view the court concurred, and having ascertained through a master that there was due from the county, principal and interest, on its original subscription of $50,000 in bonds, the sum of $72,539.56, after allowing all payments theretofore made by it to creditors of the company, a decree was rendered in favor of the complainants for that amount. From that decree the present appeal is prosecuted by the county.

The case was argued by *Mr. William Brown* and *Mr. William M. Springer* for the appellant, and by *Mr. Washington H. Campbell* and *Mr. Henry S. Green* for the appellees.

MR. JUSTICE HARLAN, after making the foregoing statement of the case, delivered the opinion of the court.

The right of the creditors of the Illinois River Railroad Company to subject to the satisfaction of their claims the bonds issued by Morgan County for its subscription to the capital stock of the company has for many years been the subject of litigation in Illinois.

The preceding statement mentions the cases in her supreme court, where the history of that litigation will be found, and summarizes the essential facts which gave rise to it. They are numerous and complicated, and our labor in ascertaining them with accuracy has been greatly increased by the confused condition of the transcript.

We will notice such of the questions of law, suggested by the assignments of error, as we deem necessary to consider or determine.

1. In *Sawyer* v. *Hoag* (17 Wall. 610), we had occasion to consider the question whether the creditors of an insolvent corporation were at liberty to assail a transaction between it and its debtor, whereby his subscription of stock was withdrawn, so far as general creditors were concerned, from the assets of the corporation. In that case we declared the doctrine to be well established, that the capital stock of a corporation, especially its unpaid subscriptions, constitutes a trust fund, for the benefit of its general creditors, and that its governing officers cannot, by agreement or other transaction with the stockholder, release him from his obligation to pay, to the prejudice of its creditors, except by fair and honest dealing, and for a valuable consideration. In the subsequent case of *Sawyer* v. *Upton* (91 U. S. 56), we had occasion to consider the same question, and there said: "The capital stock of an incorporated company is a fund set apart for the payment of its debts. It is a substitute for the personal liability which subsists in private copartnerships. When debts are incurred, a contract arises with the creditors that it shall not be withdrawn or applied otherwise than upon their demands, until such demands are satisfied. The creditors have a lien upon it in equity. If diverted, they may follow it as far as it can be traced, and subject it to the payment of their claims, except

as against holders who have taken it *bona fide* for a valuable consideration and without notice. It is publicly pledged to those who deal with the corporation for their security. Unpaid stock is as much a part of this pledge, and as much a part of the assets of the company, as the cash which has been paid in upon it. Creditors have the same right to look to it as to anything else, and the same right to insist upon its payment as upon the payment of any other debt due the company. As regards creditors, there is no distinction between such a demand and any other assets which may form a part of the property and effects of the corporation." The same doctrines are held in *Upton* v. *Tribilcock*, 91 U. S. 45; *Webster* v. *Upton*, id. 65; *Hatch* v. *Dana*, 101 id. 205. In no court have they been more distinctly approved than in the Supreme Court of Illinois, when considering the liability of the county of Morgan to creditors of the Illinois River Railroad Company arising out of these identical bonds. *Morgan County* v. *Thomas*, 76 Ill. 120.

These principles condemn the arrangements with certain creditors of the company, through which the county, to the prejudice of other creditors, attempted to discharge its liability to the common debtor by paying less than the entire sum due from it. The suits in the State court, under cover of which these arrangements were consummated, were all commenced after the decree of foreclosure, and after the company had suspended operations and was notoriously insolvent. The county recognized the dangers which beset the original enterprise, in furtherance of which its people had voted a subscription of stock payable in bonds. Its officers believed that it would inevitably fail, and that the ends expected to be accomplished by the aid voted would not be attained. It was, for these reasons, that they sought, or acceded to, an arrangement looking to the protection of the county against liability. But it is clear that other creditors besides those with whom it combined had an interest in the disposition of the assets of the company, and that the plan, as conceived and consummated, was wholly inconsistent with the established doctrines of equity. Upon recognized principles of public policy and good faith, the debt which the county owed, by reason of its subscription and the bonds given

therefor, constituted, with other property of the company, a trust fund, to which all its creditors could rightfully look for satisfaction of their claims. The county was liable for the whole of that debt, and by no device or combination, to which particular creditors were parties, could it withdraw its bonds from that fund, and thereby avoid liability to the general creditors of the company.

Had the county's liability to the company rested upon its original subscription, the present case, it must be conceded, would come within the very letter of our decisions in the cases just cited. That the subscription was paid or merged in bonds can certainly make no difference in the application of the principle upon which those cases were determined. The bonds were the evidence of the debt created by the original subscription. The company had become, as all its creditors knew, wholly unable to meet its engagements, and had practically ceased to exist. The bonds in question were part of its assets, in which all the creditors had an interest. The county, by an arrangement with some of those creditors, attempted to lessen its obligation to pay what it had stipulated to pay, and thereby defeat the rights of other creditors, who had as much claim upon the assets of the company as those with whom the county contracted. What it did is utterly indefensible under any known rules of equity.

2. But it is contended that the subscription was without authority of law, and that, consequently, the county is not liable thereon, or upon the bonds. The specific ground upon which this contention rests is that the vote of the people in 1856 conferred no legal authority to make the subscription, such vote having been taken under an order of the county court submitting, as a single proposition, the question of subscribing $50,000 to the capital stock of three separate railroad companies, one of which was the Illinois River Railroad Company; that a vote upon such a proposition, submitted in that form, was not one upon which a municipal subscription could rest. There are two sufficient answers to this suggestion. One is, that in no one of the three cases in the Supreme Court of Illinois involving this subscription was any such question distinctly raised by the county. All of them proceeded manifestly upon the undis-

puted ground that the county court had ample power by statute to make the subscription. We are not now disposed to inquire whether the particular mode in which the people were invited to pass upon the proposed subscription affected the substance or validity of the subscription when made; or, whether the subscription was not a waiver of any irregularity in that respect. Until this suit was brought, more than fifteen years after the subscription had been made, the county never disputed, in any direct form, the legality of the order submitting the question of subscription. Another answer to this objection is suggested by the act of Jan. 29, 1857, declaring the vote to have been legally taken, and requiring a subscription and the issuing of bonds in accordance with the vote of the people. That act, it is argued, was beyond the power of the legislature to pass, in that, in violation of section 9 of article 5 of the Constitution of 1848, as construed by the Supreme Court of Illinois, it imposed upon the people of the county a debt which they had never legally voted to incur; that the vote in 1856, upon the proposition to subscribe stock in three distinct railroad corporations, was an absolute nullity, which could not be constitutionally remedied by any act of assembly, or otherwise than by a direct vote of the electors upon a new proposition submitted in legal form. In support of these views we are referred to numerous decisions of the State court, which we had occasion heretofore to examine in other cases. We deem it unnecessary to consider the general doctrine, with all its limitations and qualifications, of the power of the legislature, by retrospective enactments, to cure defects or omissions which occurred in elections relating to municipal subscriptions. It is often difficult to determine, as matter of local constitutional law, whether the defect or omission in a particular case involves a mere irregularity in the execution of a statutory power, or is vital and jurisdictional. It is quite sufficient on this point to say that the Supreme Court of the State, in *Thomas et al.* v. *County of Morgan* (39 Ill. 496), as well as in *Morgan County* v. *Thomas* (76 id. 120), recognized the act of the 29th of January, 1857, as having legalized the vote of the county. Those cases, in connection with *Thomas* v. *County of Morgan* (59 id. 479), are adjudications under which certain creditors of

the Illinois River Railroad Company have received payments of their claims out of the amount due from the county upon the bonds issued in payment of its subscription. The decrees in those cases could not have been rendered except upon the ground that the subscription was not invalid by reason of the particular mode in which the question of county aid was submitted to the electors.

3. It is further contended that the bonds were deposited with Elliott & Brown, to be delivered upon the condition, to which the railroad company assented, that they should be used only for the payment of work done in Morgan County; and, since no such work was done by that company, neither the latter nor its creditors can enforce liability upon the county.

Undoubtedly the county authorities, at the outset, expected that the bonds would be applied only upon such work, and there is no reason to suppose that the president of the company intended any application of them inconsistent with the paper which he executed and delivered to the county prior to their issue. The county court relied upon the assurances given by that officer, and made an order, at its September Term, 1857, that the bonds be delivered to the company. In conformity with that order the bonds were deposited with Elliott & Brown, the bankers of the company, and were held by them subject to its order. They in return received, for the county and by its direction, the certificate of stock. Subsequently, and after the bonds were issued and delivered to Elliott & Brown, the county voted as a stockholder in the election of directors, and for two years paid the interest on its bonds. During all that time who owned the bonds? We have already seen that the Supreme Court of the State adjudged, and, as we think, rightly, that the subscription was absolute and unconditional, and, when made, the company became entitled to the bonds, and the county to the stock. When the absolute subscription was made, the claim for its payment became, as was held by that court, a part of the assets of the company, upon which creditors could rely for the payment of their debts. While, as held by the State court, Thomas might bind himself to treat the subscription as conditional, he had no authority, simply as president of the company, "to consent that it should become conditional." The

present appellees, by their purchase of its mortgage bonds (about $900,000 of them purchased in April or May, 1862, and the remainder in 1868), became creditors of the company, and nothing is disclosed by the evidence which estops them from claiming, as against the county, that the bonds given for the county's unconditional subscription constituted, from, at least, the time of their issue and delivery to Elliott & Brown, a part of the assets of the company, to which the latter's creditors could look. Upon this very point the Supreme Court of the State expressed similar views, and said that "where a party receives property from another in discharge of precedent liability, and the party delivering the property has no legal right to prescribe its future disposition or use, as in the present instance, the mere fact that when he delivers it he expects and intends that it shall be applied to a particular disposition or use, does not make such an application of it a condition precedent to the vesting of title."

4. The objection that the appellees are concluded by the decree in the State court, under which the county obtained possession of its bonds, is not well taken. They were not parties to any of those suits, but it is contended that they are nevertheless bound by the adjudication upon the claim asserted therein by Studwell, Hopkins, and Cobb, in their capacity as trustees in the mortgage deed, that they were entitled to the possession of the bonds, for delivery to the new company in completion of the original contract with the county. The Supreme Court of the State was of opinion that the mortgage deed did not, by its terms, include these bonds; that the Peoria, Pekin, and Jacksonville Railroad Company was not a reorganization of the Illinois River Railroad Company, but a new and totally independent organization; and, therefore, the new company acquired no claim to the bonds at the sale under the deed of trust. 76 Ill. But if the trustees, after obtaining the decree of foreclosure and a sale of the mortgage property for the benefit of the bondholders, were under a duty, or by virtue of their position were authorized to enforce, for the benefit of those creditors, the collection of the decree against the company for the balance of the mortgage debt, it is manifest that they did not assume, in the suit in the State court, to

which they and the county were parties, to represent the bondholders. In the suit commenced by Elliott & Brown, and reported in 89 Ill., they claimed the right to hold the bonds for the benefit of the new company, and not for the bondholders, whose claims, after crediting the proceeds of the foreclosure sale, were unsatisfied to the extent of $1,061,292.56. Besides, the State court did not, in that case, decide that Morgan County was discharged altogether, and as to everybody, from responsibility upon the bonds, because of the failure of the old company to construct the road in that county. In the original decree it directed the bonds to remain in the custody of Ayres & Co. And in the case in 59 Ill. the court held that the construction of the road by the new company was a substantial compliance with the contract between the old company and the county. There was no adjudication, in the State court, against the claims of the present appellees. On the contrary, the grounds upon which the claims of Vail, Ladd, Thomas, Blair, and other creditors were adjudged by the Supreme Court of the State to be payable out of these bonds are the precise grounds upon which we sustain the claims of appellees as creditors of the old company.

5. In reference to the suit which, it is suggested, was instituted by Studwell, Hopkins, and Cobb in the Circuit Court of the United States for the Southern District of Illinois, it is sufficient to say that the present transcript contains nothing upon that subject. We are not advised, in any proper form, of the nature and object of that suit, nor who were parties to it. We cannot, therefore, say that the final decree in that case, if any was rendered, would affect the rights of parties in this litigation.

There are many other questions which counsel have discussed, but we do not regard them as material in determining the essential rights of the parties. We, therefore, refrain from any discussion of them. The decree below is in line with the adjudications of the Supreme Court of the State, and, in our judgment, is right.

While upon the bench MR. JUSTICE SWAYNE and MR. JUSTICE STRONG participated in the decision of this case. They concur in this opinion; and it is ordered that the judgment be

entered as of the date when this cause was submitted to this court.

Decree affirmed.

MR. JUSTICE MILLER, MR. JUSTICE FIELD, and MR. JUSTICE BRADLEY dissented.

NOTE. — A petition was filed for rehearing.

MR. JUSTICE HARLAN delivered the opinion of the court.

We do not perceive that the petition for rehearing in behalf of the county of Morgan contains any suggestion which was not pressed upon our attention in oral argument, as well as in the printed briefs heretofore filed. All that counsel said was carefully considered by us. But there were one or two matters, not distinctly covered by our opinion, to which we may properly refer. A rehearing is asked to the end that a complete record of the suit, in the Circuit Court of the United States for the Southern District of Illinois, of *Studwell, Hopkins, and Cobb, Trustees*, v. *Morgan County, &c.*, may be obtained and embodied in the transcript of the present case. If the record of that case were here, it could be of no use to the county. The decree therein is not pleaded for any purpose. Further, it is apparent, as well from the printed arguments filed in this court, for and against the county, as from the testimony of the witnesses who refer to the case in the Circuit Court, that the suit of *Studwell, &c.* v. *Morgan County, &c.*, was dismissed *by the complainants therein, and that there was no adjudication upon the merits.* The decree of dismissal in that suit, therefore, concluded none of the parties to it, even were it conceded that the trustees had authority, in virtue of their position, to represent the present appellees in any litigation with Morgan County touching its liability to creditors of the Illinois River Railroad Company.

We did not, as counsel seem to suppose, overlook the argument based upon the subscription made by the city of Jacksonville. That subscription, as matter of law, was wholly disconnected from the subscription made by the county, and we could not regard the former as payment, in whole or in part, of the latter, without assuming to make for the parties a contract which they did not choose to make for themselves. If, as urged, that the result is unfortunate for the county, we can only say, what cannot be too often repeated, that hard cases cannot be permitted to make bad law.

Petition denied.

Allen v. *County of Morgan*, appeal from the same decree, was argued by the counsel who appeared in the preceding case. MR. JUSTICE HARLAN remarked, in giving the opinion of the court, that no error was perceived in the record to the substantial prejudice of the appellants. The decree below was therefore

Affirmed.

MR. JUSTICE MILLER, MR. JUSTICE FIELD, and MR. JUSTICE BRADLEY dissented.

WATER-WORKS COMPANY v. BARRET.

1. An order made by the court below, pursuant to the consent of parties, is binding upon them here.
2. A company who, under a contract with a city, was constructing water-works, executed a mortgage on them, to secure certain bonds and the coupons thereto attached, which stipulates that if the company shall fail, for the space of ninety days, to pay the coupons when they shall become due, provided such failure is not caused by the city under the contract, all of the bonds shall become due, and the lien of the mortgage may be enforced for the whole debt. Coupons remained due and unpaid for the specified period. *Held*, that the bill need not negative the failure of the city, but that such failure, if it existed, must be set up as matter of defence.

APPEAL from the Circuit Court of the United States for the Eastern District of Arkansas.

The facts are stated in the opinion of the court.

Mr. Augustus H. Garland for the appellant.

Mr. U. M. Rose, contra.

MR. JUSTICE MILLER delivered the opinion of the court.

The Little Rock Water-works Company, a corporation under the laws of the State of Arkansas, undertook to construct a system of water-works for the use of the city of Little Rock and the citizens of that city, under an ordinance passed by the city authorities.

In order to raise the money necessary to do this work the company issued its bonds to the amount of $80,000, the payment of which was secured by a mortgage on its entire works and property to Barret and Alexander, as trustees, who, on failure of payment of the semi-annual interest coupons, brought in the State court this foreclosure suit. In its progress it was removed into the Circuit Court of the United States, where a receiver was appointed to take charge of the property pending the litigation. The court rendered a final decree ordering a sale to satisfy the full amount of the bonds and coupons secured by the mortgage. This appeal was taken by the company.

Two errors are assigned:—

1. The appointment of a receiver.

2. The rendering of a decree for the amount of the bonds which by their terms are not yet due.

As regards the first assignment of error, it is sufficient to say that the record shows that the appointment of receiver was made by consent of parties, the attorneys of appellant being in court at the time. However other parties may complain of this act, and there were other parties, none of whom have appealed, the present appellants are bound by their consent in this court as well as in the court below, and cannot be heard to object to what they then agreed to.

As to the second error assigned, the counsel for appellant says, "The court will search in vain through the bill, two amended bills, and supplemental bill, to find any reason why the appellees should have a decree for the payment of bonds which will not be due for many years." Yet in the very body of the original bill is a long extract from the deed of trust on which the suit is founded, a part of which is in this language: "It is further agreed that in the event said party of the first part (the water-works company) shall fail for the space of ninety days to pay the semi-annual interest due on said bonds as and when the same may become due, or any of said annual instalments of the sinking-fund as and when the same may become due, provided that such failure is not caused by the said city of Little Rock under the contract aforesaid, after presentation and demand of the payment of said coupons, or after the demand of any instalment of said sinking-fund, then and in that event all of said bonds shall become due and payable, and the lien hereby created may be enforced for the whole debt." The bill shows that one set of coupons was due and unpaid over ninety days when this suit was begun, that others fell due during the litigation, and that the company was insolvent and the works going to ruin. A copy of the deed of trust is made a part of the bill by reference and is attached to it as an exhibit.

It is said, however, that it does not appear by any allegation of the bill that the failure to pay was not by reason of the fault of the city of Little Rock mentioned in the mortgage. It seems probable that the fault of the city, which might mitigate the failure of the company to pay its interest, so far as to prevent

the whole sum falling due for that failure, had reference to the money which the city had agreed to pay for the use of water in the public buildings and certain hydrants which were to be for public use.

If there was any such fault in the city it was matter of defence to be made out by the defendant, for the innocent purchaser of the bonds could not be supposed to know whether the city had paid as it should or not. No such case is made by the appellant. On the contrary, it appears that the appellant did not construct the works, but let out the job to Dennis Long and Samuel A. Miller; that by reason of their failure to do the work according to the contract of the company with the city, the latter refused to accept it, and the company sued Long and Miller for that cause and attached the work they had constructed, which suit was pending when the foreclosure suit began, the record of the former being made a part of the latter. It was obviously the fault of the appellant and not the city which caused the default in paying the coupons.

These are all the errors assigned, and they are not sustained by the record.

Decree affirmed.

---

41 f-796

103	518
L-ed	485
52 f	339
103	518
L-ed	485
150	539

GREEN v. FISK.

Upon a petition filed by A., alleging that he was the owner of an undivided half of certain real estate which was not susceptible of a division, and praying for a partition thereof by sale, the court below decreed that he was entitled to one-half of the property, and referred the case to a master, "to proceed to a partition according to law, under the direction of the court." *Held*, that this is not a final decree, and that an appeal does not lie therefrom.

MOTION to dismiss an appeal from the Circuit Court of the United States for the District of Louisiana.

The facts are stated in the opinion of the court.

Mr. Thomas J. Durant and *Mr. Charles W. Hornor* in support of the motion.

Mr. Thomas J. Semmes, contra.

MR. CHIEF JUSTICE WAITE delivered the opinion of the court.

This was a suit begun by Mrs. Fisk, the appellee, in a State court of Louisiana, to obtain a partition of real property. She alleged that she was the owner of one-half the property; that she was not willing to continue her joint ownership, and that a partition by sale was necessary, as a division could not be made in kind. The prayer of her petition was in accordance with these allegations.

Green, the defendant below, being a citizen of California, removed the case to the Circuit Court of the United States for the District of Louisiana. In that court, on the 31st of March, 1879, Mrs. Fisk was decreed to be the owner of one-half the property, and the case was referred to "J. W. Gurley, Esq., master, to proceed to a partition according to law, under the direction of the court." From that decree an appeal was taken by the defendant, which Mrs. Fisk now moves to dismiss, because the decree appealed from is not the final decree in the cause.

We think the motion must be granted. In the Circuit Court the suit was one in equity for partition. Although no formal order was entered assigning it to the equity side of the court, that was clearly its proper place, and it was so treated by the parties and the court.

In partition causes, courts of equity first ascertain the rights of the several persons interested, and then make a division of the property. After the division has been made, and confirmed by the court, the partition, if in kind, is completed by mutual conveyances of the allotments to the several parties. Mitford, Eq. Pl. (4th ed. by Jeremy), 120; 1 Story, Eq., sect. 650; 2 Daniell, Ch. Pr. (4th Am. ed.) 1151.

A decree cannot be said to be final until the court has completed its adjudication of the cause. Here the several interests of the parties in the land have been ascertained and determined, but this is merely preparatory to the final relief which is sought; that is to say, a setting off to the complainant in severalty her share of the property in money or in kind. This can only be done by a further decree of the court. Ordinarily, in chancery, commissioners are appointed to make the necessary

examination and inquiries and report a partition. Upon the coming in of the report the court acts again. If the commissioners make a division the court must decide whether it shall be confirmed before the partition, which is the primary object of the suit, is complete. If they report that a division cannot be made and recommend a sale, the court must pass on this view of the case before the adjudication between the parties can be said to be ended.

In this case a partition by sale was asked for, because the property was not susceptible of division in kind. That the court has not ordered, and the reference to the master was undoubtedly to ascertain, among other things, whether such a proceeding was in fact necessary in order to divide the property. The master was in everything to proceed under the direction of the court. He had no fixed duty to perform. He was the mere assistant of the court, not in executing its process, but in completing its adjudication of the partition which was asked. There are still questions, in which the parties have each a direct interest, and they must be determined judicially before the relief has been granted which the suit calls for.

In foreclosure suits it has been held that a decree which settles all the rights of the parties and leaves nothing to be done but to make a sale and pay over the proceeds is final for the purposes of an appeal. The reason is that in such a case the sale is the execution of the decree of the court, and simply enforces the rights of the parties as finally adjudicated. Here, however, such is not the case, because still the court must act judicially in making the partition it has ordered. What remains to be done is not ministerial but judicial. The law has prescribed no fixed rules by which the officers of the court are to be governed in the performance of the duty assigned to them. The court is still to exercise its judicial discretion in directing the movements and approving the acts of its assistants, until it has finally settled and determined on the details of the partition, if made in kind, or directed a sale by the ministerial officers and prescribed the rules for a division of the proceeds.

Appeal dismissed.

LOUISIANA *v.* NEW ORLEANS.

A cause, not presenting questions entitling it to precedence, will not, over the objection of a party thereto, be advanced in order that it may be heard with another case standing before it on the docket.

ERROR to the Supreme Court of the State of Louisiana.

Motion to advance.

Mr. John A. Campbell and *Mr. Edward Bermudez* in support of the motion.

Mr. Benjamin F. Jonas and *Mr. Henry C. Miller*, *contra.*

MR. CHIEF JUSTICE WAITE delivered the opinion of the court.

We decided at the last term that this case did not present questions which entitled it to a hearing in advance of others standing before it on the docket. It is now suggested that *United States* v. *New Orleans* involves the consideration of the same questions and the construction of the same statute, and we are asked to advance this case to be heard with that. To this the defendant in error objects. When a case is advanced to be heard with another which has precedence on the docket, the rule is to require the two to be argued as one. This rule is never departed from except under very peculiar circumstances. As we cannot compel a party against his will to argue his case with another, we have always heretofore denied motions of that kind when they are resisted. There are no such special circumstances in this case as to make it proper that it be advanced and heard separately from the other. The motion to advance will, therefore, be overruled, but counsel may submit printed arguments in the other case on the questions presented in that which are common to the two, provided twenty copies of such arguments are filed with the clerk at least six days before that case comes up for hearing.

Motion overruled.

103 522
L.ed 313
147 150
103 522
L.ed 313
148 162

DENNISON v. ALEXANDER.

A judgment or a decree of the Supreme Court of the District of Columbia cannot be re-examined here, unless the matter in dispute, exclusive of costs, exceeds the value of $2,500.

APPEAL from the Supreme Court of the District of Columbia.

Alexander, on the fifth day of January, 1875, filed his bill in the court below against Dennison and others, commissioners of the District of Columbia, and the First National Bank, to restrain the sale of real estate in the city of Washington which the commissioners had advertised to satisfy the amount due for improvements made by the board of public works. The certificate of indebtedness issued by that board and transferred to the bank, was for less than $400 and more than $100. A perpetual injunction was awarded and an appeal allowed by a justice of this court.

Mr. Albert G. Riddle for the appellant.
Mr. Joseph J. Stewart for the appellee.

MR. CHIEF JUSTICE WAITE delivered the opinion of the court.

We think this case is governed by *Railroad Company* v. *Grant*, 98 U. S. 398. In that case we held that the act of Feb. 25, 1879, c. 99, sects. 4, 5 (20 Stat. 320), took away our right to hear and determine cases from the Supreme Court of the District of Columbia where the matter in dispute did not exceed $2,500, and that it operated on pending cases which had been brought here under the provisions of sect. 847 of the Revised Statutes relating to the District. This case came here under sect. 848, which provided for the allowance of appeals and writs of error by the justices of this court under certain circumstances, when the matter in dispute was less than $1,000, the then general jurisdictional amount, but exceeded $100. There is no reservation in the repealing act as to this class of pending cases any more than the other. Both sections have reference

to the same general subject-matter, that is to say, our review of the judgments and decrees of the Supreme Court of the District in cases where jurisdiction has been made to depend on the value of the matter in dispute. Under the act of 1879 we can no longer hear any of that class of cases, unless the amount exceeds $2,500.

Appeal dismissed, each party to pay his own costs.

COUNTY OF TIPTON v. LOCOMOTIVE WORKS.

1. A general statute of Tennessee required the county courts, when thereunto authorized by a popular vote at an election held for the purpose, to subscribe for stock in a railroad company. A special statute was subsequently passed, which, without requiring the submission of the question of subscription to a popular vote, conferred power on the county courts of the counties on the line of a particular railroad to make, and on the company to receive, a subscription for its stock. *Held*, that the special statute is not in violation of the provisions of sect. 8, art. 1, or of sect. 7, art. 11, of the Constitution of Tennessee of 1834, *infra*, p. 525.
2. A county, having lawful authority, issued its bonds in payment of its subscription to a railroad company. Between the latter and another company a consolidation was about to take place, upon condition that the county court would, on an extension of time being granted, levy and collect a tax sufficient to pay the amount due on the bonds. The county court accepted the proposition, and gave the requisite assurance. The consolidation thereupon took place. *Held*, that the county was estopped from denying the validity of the bonds in the hands of a *bona fide* holder, to whom they were transferred for value by the consolidated company.

ERROR to the Circuit Court of the United States for the Western District of Tennessee.

The facts are stated in the opinion of the court.

Mr. George Gantt for the plaintiff in error.

Mr. William Y. C. Humes, *Mr. Henry T. Ellett*, and *Mr. Stanley Matthews* for the defendant in error.

MR. JUSTICE HARLAN delivered the opinion of the court.

This is a writ of error from a judgment in favor of the Rogers Locomotive and Machine Works against the county of

Tipton, in the State of Tennessee, for the principal and interest of fifty bonds of $500 each, dated Jan. 1, 1869, and payable on the first day of January, 1873, to the Mississippi River Railroad Company or bearer, with interest from date at the rate of six per cent per annum.

Each bond, signed by the chairman of the Tipton County court, and countersigned by its clerk, recites that it is "issued under and by virtue of sect. 6 of an act of the legislature of the State of Tennessee, passed Feb. 25, 1867, amended on the twelfth day of February, 1869;" also, that "a special tax is levied, by authority of law, upon all the taxable property in the county of Tipton, to meet the principal and interest of these bonds, collectible in equal instalments, running through five years, as the bonds themselves mature;" and further, that "this is one of four hundred bonds, all of the same denomination and rate of interest, issued by Tipton County in payment of a subscription of $200,000 to the Mississippi River Railroad Company, made by the county court of said county, under the authority of the acts above recited,—these bonds, transferable by delivery and redeemable in five years at the rate of $40,000 a year, commencing Jan. 1, 1870."

When the foregoing acts were passed there was in force a general statute, under the provisions of which counties, incorporated cities, and towns could subscribe stock in railroads, upon certain terms and conditions, one of which was the previous approval of the legal voters of such county, city, or town, at an election called and held for the ascertainment of their will. These special acts, in connection with the act of Nov. 5, 1867, for the benefit of the Mississippi River Railroad Company, authorized the county courts of counties *on the line of that company's road* (among which was the county of Tipton) to subscribe to its capital stock, without requiring a submission of the question of subscription to a popular vote,—the majority of the justices in commission being present, and a majority of those present concurring.

The validity of those acts is questioned here, as it was in the court below, upon the ground that they are unconstitutional, and, therefore, gave no authority to make the subscription, or issue bonds in payment thereof.

The provisions of the Constitution of Tennessee (that of 1834), to which, it is supposed, they are repugnant, are sect. 8 of art. 1, and sect. 7 of art. 11; the first of which declares that "no freeman shall be taken, or imprisoned, or disseised of his freehold, liberties, or privileges, or outlawed, or exiled, or in any manner destroyed, or deprived of his life or property, except by the judgment of his peers, or the law of the land;" and the last of which provides that "the legislature shall have no power to suspend any general law for the benefit of any particular individual; nor to pass any law for the benefit of individuals, inconsistent with the general law of the land; nor to pass any law granting to any individual, or individuals, rights, privileges, immunities, or exemptions, other than such as may be, by the same law, extended to any member of the community who may be able to bring himself within the provisions of such law: *Provided, always*, the legislature shall have power to grant such charters of incorporation as may be deemed expedient for the public good."

It is contended that these special acts are in violation of sect. 7, art. 11, of the State Constitution in that they authorized a limited number of counties to subscribe to the capital stock of a particular railroad corporation, and also because they dispensed with the previous sanction of a popular vote, as required by the general statute regulating railroad subscriptions by counties, incorporated cities, and towns; and, further, that being partial and special laws, inconsistent with the general law upon the subject of municipal subscriptions, they do not constitute "the law of the land," within the meaning of sect. 8, art. 1, of that Constitution. The argument in behalf of the plaintiff in error is, that the power, reserved to the legislature in the proviso to sect. 7 of art. 11, "to grant such charters of incorporation as may be deemed expedient for the public good," is limited, in its exercise, by the prohibitions contained in the body of the same section; and that a charter conferring upon a particular railroad company, or upon particular municipal corporations, special privileges and immunities, not given by the general law, was inconsistent with those prohibitions, and, besides, was not a "law of the land" within the meaning of sect. 8 of art. 1.

These propositions have received at our hands that consideration which their importance confessedly demands; and if we err in the conclusions reached, it will not be the fault of able counsel, who, both in oral and printed arguments, have pressed upon our attention every suggestion which seems to have any bearing upon the question presented for determination.

The earnestness with which they have asserted their positions to be sustained by adjudications of the Supreme Court of the State has made it necessary for us to examine, with great care, a very large number of the reported decisions of that learned tribunal. If, when the acts in question were passed, the General Assembly was without power, under the Constitution, as interpreted by the highest court of Tennessee, to enact a special law authorizing a designated number of counties, without a previous vote of the people, to make subscriptions of stock to a particular railroad running through such counties, our duty is to accept that construction of the fundamental law of the State. But if there was no such contemporaneous or fixed construction, this court, as was the court of original jurisdiction, is under a duty imposed by the Constitution of the United States, from the performance of which it is not at liberty to shrink, to determine, for itself, what were the legal rights of parties at the time the bonds in suit were issued.

It would extend this opinion to an improper length should we extract from the numerous decisions of the State court, cited by counsel, so much of their language as seems pertinent to the questions before us. We must, therefore, content ourselves with stating only the general doctrines to be deduced from the adjudged cases, some of which are cited in a note to this opinion.[1]

Prior to the case of *Wallace* v. *Tipton County* (to which we

[1] *Budd* v. *The State*, 3 Hum. 483; *Vanzant* v. *Waddel*, 2 Yerg. 260; *State Bank* v. *Cooper*, id. 599; *Tate* v. *Bell*, 4 id. 202; *Officer* v. *Young*, 5 id. 320; *Fisher* v. *Dabbs*, 6 id. 119; *Jones* v. *Perry*, 10 id. 59, 78; *Marr* v. *Enloe*, 1 id. 452; *Sheppard* v. *Johnson*, 2 Hum. 285; *Hazen* v. *Union Bank of Tennessee*, 1 Sneed, 115, 118; *Nichol* v. *Mayor, &c.*, 9 Hum. 252; *City of Memphis* v. *The Memphis Water Co.*, 5 Heisk. 495; *Memphis City Railroad Co.* v. *Mayor & Aldermen of Memphis*, 4 Cold. 406; *L. & N. Railroad Co.* v. *County Court of Davidson*, 1 Sneed, 638; *McCallie* v. *Mayor, &c.*, 3 Head, 317. See also numerous cases cited in the head-notes of the foregoing cases as they appear in Chancellor Cooper's Tennessee Reports.

will hereafter refer more particularly), the following rules or principles seem to have been established by repeated adjudications in the Supreme Court of the State, viz.: —

That a law, which did not alike embrace and equally affect all persons in general, or all persons who exist, or may come into the like state and circumstances, was a partial and special law, and, therefore, not "the law of the land," within the meaning of the Constitution of 1796, from which was taken sect. 8 of art. 1 of the Constitution of 1834;

That sect. 7 of art. 11, prohibiting the suspension of a general law for the benefit of any particular individual, or the passage of any law for the benefit of individuals, inconsistent with the general laws of the land, or the passage of any law granting to any individual or individuals, rights, privileges, immunities, or exceptions, other than such as may by the same law be extended to any member of the community who may be able to bring himself within the provisions of such law, is a statement, in condensed form, of the construction which the Supreme Court of the State had in several decisions placed upon the phrase, "the law of the land," as used in both the Constitutions of 1796 and of 1834;

That, nevertheless, the authority of the legislature to create corporations with special rights and privileges, existed as an incident of sovereignty; that a law creating a corporation and granting a franchise was more in the nature of a contract than a "law of the land," in the sense of the Constitution; and, upon that ground, the right given to a bank by its charter, granted in 1832, to take a greater rate of interest than was allowed by a general statute to individual citizens, was held not to be obnoxious to the Constitution upon the ground that it was not a general law, or "the law of the land;"

That the proviso in sect. 7 of art. 11 of the Constitution of 1834 was inserted "for the purpose of enabling the legislature thereby to grant exclusive privileges, which, but for the proviso, would be prohibited by the body of the section;" that the power to create corporations was not curtailed or restricted by the general prohibitions in that section, but only by the positive provisions to be found in other parts of the Constitution;

That prior to the adoption of the Constitution of 1834 the Supreme Court of the State suggested doubts as to whether the taxing power, being legislative in its nature, could be constitutionally conferred upon the subordinate municipal corporations or civil divisions of the State; and, that for the purpose of removing those doubts, the convention which framed that Constitution incorporated into it sect. 29 of art. 2, which declares that "the General Assembly shall have power to authorize the *several* counties and incorporated towns in the State to impose taxes for county and corporation purposes, respectively, in such manner as shall be prescribed by law; and all property shall be taxed according to its value, upon the principles established in regard to State taxation;"

That the construction of a railroad to or through a county or incorporated town is, in the one case, a county, and in the other a corporate purpose, for which the legislature may invest such county or town respectively with the power to impose taxes;

That under sect. 29 of art. 2 the legislature could, by special act, confer upon the mayor and aldermen of an incorporated town, directly and exclusively (and, consequently, upon the county court of a county), the power to subscribe railroad stock, without first, or at all, submitting the question of subscription to a vote of the inhabitants of such town.

Such were, beyond question, as we think, the established principles of the Constitution as announced by the highest judicial tribunal of the State, up to the decision in *Wallace* v. *Tipton County*, to which reference has already been made. These doctrines, it must be conceded, would sustain the statutes of 1867 and 1869 against the objections urged. But it is contended that the decision in that case is a direct authority against the constitutionality of those acts, and should control our judgment.

That case deserves special examination. It was a suit commenced in 1873, in an inferior State court of Tennessee, by certain taxpayers of Tipton County against the county court of that county, the Paducah and Memphis Railroad Company (a corporation lawfully created by the consolidation, in 1872, of the Mississippi River Railroad Company, with the Paducah

and Gulf Railroad Company, a Kentucky corporation), and the local collectors of Tipton County engaged in the collection of taxes which had been levied to meet the bonds constituting the issue of $200,000 to the Mississippi River Railroad Company, under the aforesaid acts of 1867 and 1869. The object of that suit was to enjoin the collection of such taxes, upon the ground that those acts were unconstitutional and void. In May, 1874, certain citizens of other States, holders of a portion of the Tipton County bonds, were, upon their own application, made parties defendant in that suit. They thereupon filed a petition for its removal to the Circuit Court of the United States, and, as to them, the opinion of the court states, the suit was removed. The railroad company, by an amended answer, disclaimed all interest in the suit, and informed the court that it neither held nor owned any of the bonds, but that they were held and owned by others who had paid value therefor. Thenceforward it was a suit, practically if not exclusively, between parties who had no interest in enforcing the collection of the county's bonds. It was finally determined without the presence of any of the holders of the bonds. Waiving any question as to whether, under the act of Congress, the whole suit was not removed to the Federal court, it is sufficient to say that, in accordance with the prayer of the taxpayers, a decree was entered, which was, by the Supreme Court of the State, in all respects, affirmed. Although the case was determined in the Supreme Court, at its September Term, 1875, it has not, that we can ascertain, been published in its reported decisions, and we are not, therefore, advised of the precise grounds upon which the acts of 1867 and 1869 were assailed in argument, as being in conflict with the Constitution. But the opinion of the court discloses the fact that those acts were held to be repugnant to sect. 8 of art. 1, and sect. 7 of art. 11, of the State Constitution, upon the ground, that while the general law of 1852, regulating railroad subscriptions by counties, towns, and cities, required a popular vote as a condition precedent to any authority to make subscriptions, the special acts of 1867 and 1869 permitted a few counties, upon the line of the Mississippi River railroad, by their respective county courts, and without a submission of the question to the people, to subscribe to that

company's stock. No comment whatever is made in the original opinion, and very little in the opinion on the rehearing, upon the scope or effect of the proviso in sect. 7 of art. 11, giving or reserving to the legislature the power to grant such charters of incorporation as it deemed expedient for the public good. But it is to be assumed that the court did not regard that proviso as materially affecting the conclusion reached. If there had been no decision of the State court, subsequent to that of *Wallace* v. *Tipton County*, on the subject of municipal subscriptions, under special statutes, we should feel greatly embarrassed by the circumstance, that the judgment of the Circuit Court could not, upon this branch of the case, be sustained, except by disregarding that decision.

But all difficulty, we think, is removed by the decision of the State court in the more recent case of the *Knoxville and Ohio Railroad Company* v. *Hicks*, determined in 1877. Unless we mistake, altogether, the import of that decision, it is inconsistent with the doctrines of *Wallace* v. *Tipton County*, and, upon the point now before us, practically overrules the latter case.

In *Knoxville and Ohio Railroad Company* v. *Hicks*, it was a question whether an act passed in 1852, exempting the capital stock, dividends, roads, and fixtures of the Knoxville and Kentucky Railroad Company from taxation, until the stock paid a dividend equal to the legal rate of interest, was in conflict with the Constitution of 1834. That Constitution declared (sect. 28, art. 2) "that all lands, liable to taxation, held by deed, grant, or entry, town lots, bank stock, &c., and such other property as the legislature may from time to time deem expedient, shall be taxable." In view of that constitutional injunction, the case was a very strong one for the application of the prohibitions, against special and partial laws, contained in sect. 7 of art. 11, if such prohibitions had any application whatever to charters of incorporation granted by the legislature. But the court, after stating that the convention of 1834 comprised among its delegates some of the ablest lawyers the State ever had, who were familiar with the principles of the Dartmouth College case, and knew that the legislature, under the previous Consti-

tution, had, without question, exercised the power of granting charters, with total or partial exemptions, said: "With these facts prominently before the convention, if it was their purpose to restrict the power of the legislature, one should expect to find such restriction expressed in unequivocal language. But the only direct provision, in regard to the power of the legislature in respect to charters of incorporation, is in the proviso to sect. 7 of art. 11, to the effect that the restriction upon the power of the legislature to grant special privileges, immunities, and exemptions was not to be construed to affect the power of the legislature to grant such charters of incorporation as they might deem expedient for the public good, thereby leaving the power as it previously existed. See *Hope* v. *Deaderick*, 8 Hum. 1. If it had been the purpose of the convention to restrict the power of the legislature in this particular, this would certainly have been the appropriate place to insert the restriction; but so far from doing so, we find only the proviso above referred to, which was intended to exclude the idea that the first clause of the section against the granting of special privileges, immunities, or exemptions was intended to limit the power of the legislature in regard to granting charters of incorporation. From this, the conclusion seems necessarily to follow, that the legislature was still left the power to pass laws creating bodies corporate, with all the rights, privileges, immunities, and exemptions which it was usual to vest in such fictitious persons under the general principles previously recognized; and, as we have seen, the power in question was previously recognized by the general law and the authorities of the State. We do not say rights, privileges, or immunities might be granted inconsistent with other positive restrictions of the Constitution." The court then proceeds to consider the language of sect. 28 of art. 2, already cited, in reference to taxation, and says: "On the other hand, this section may well be construed as having no reference to the property of corporations to be created, and as leaving the power of the legislature, in this regard, as it stood before. This is the more natural construction when we take this section in connection with the clause before referred to, and find that no express restriction is placed upon the power conceded to have previously existed in the legislature, in re-

spect to corporations, in that clause which refers directly to the power to grant such charters."

The chief significance of the decision in the last case lies in the explicit declaration by the court, that the power expressly granted to the legislature in the proviso to the seventh section of article eleven, to create corporations with such charters as, in its judgment, were expedient for the public good, was not limited or restrained in its operation by the prohibitions in the same section against special rights, privileges, immunities, or exemptions; in other words, that the legislature, as to corporations, could grant special rights and privileges which, but for the proviso, might be deemed obnoxious to the prohibitory clauses of that section. And in that view we concur.

The case of *McKinney* v. *Overton Hotel Co.* (12 Heisk. (Tenn.) 104), cited by counsel for plaintiff in error, is not adverse to this conclusion. The main question there was as to the constitutionality of an act, passed in 1860, authorizing the hotel company to issue mortgage bonds bearing a greater rate of interest than was allowed by the general law of the State. It was held that sect. 7 of art. 11, giving power to grant such charters of incorporation as the legislature deemed expedient for the public good, must be construed in connection with sect. 6 of the same article, which imposed upon the legislature the duty of fixing the rate of interest, and declared, that the "rate so established shall be equal and uniform throughout the State." The decision was that the legislature, in creating corporations under sect. 7, could not grant to them "powers or rights expressly forbidden by any other clause of the Constitution." Consequently, the rate of interest fixed by the legislature was applicable to corporations as well as to individuals. The language of the court, in connection with prior decisions, upon the general subject of corporations, justifies the conclusion that the act of 1860 would not have been declared void had not the Constitution of 1834 expressly required the rate of interest to be equal and uniform throughout the State.

Looking, then, as well at the language of the Constitution as at the course of decision in the Supreme Court of Tennessee up to the time the acts of 1867 and 1869 were passed, and giving full effect to its latest utterance, to which our attention

has been called, and remembering, also, that the power given to a municipal corporation to subscribe to the stock of a railroad company may be, also, a right and privilege of that company (*County of Scotland* v. *Thomas*, 94 U. S. 682; *Wilson* v. *Salamanca*, 99 id. 499; *Empire* v. *Darlington*, 101 id. 87, 91), our conclusion is, that those acts were not repugnant to the constitutions of the State, by reason of the authority they confer on a limited number of counties to make, and on a particular railroad corporation to receive, a subscription of stock, nor because they dispensed with the previous assent of the people of such counties expressed at a popular election.

It remains to inquire whether, in view of the evidence, the Circuit Court committed any error of law, either in giving or refusing instructions to the jury.

Certain facts should be stated as explanatory of the instructions which were given to the jury. Upon the trial evidence was introduced in behalf of the county tending to establish "fraud, moral coercion, intimidation, and bribery in the procurement and issuance of the bonds in suit in this case upon the part of the Mississippi River Railway Company," and that such corrupt practices were not known to the county court until February, 1875. On the 30th of September, 1871, at a meeting of the board of directors of the railroad company, a resolution was offered by one who, at the time, was a justice of the peace of Tipton County, which, after reciting the failure of the county to provide means for the payment of its bonds and coupons, designated E. Norton, as agent of the company, to make the following proposition to the county, namely: "That this company will grant an extension of time for the payment of said bonds and interest, so that the said payments shall be extended to the period of ten years from the date of the bonds, in ten annual instalments, instead of the time they now have to run; this extension to apply to all bonds which this company owns or controls. But this proposition should be made on condition that the County Court of Tipton County shall immediately levy a tax, and proceed to its collection, for the amount now due under this offer, and that they shall each year levy, collect, and promptly pay over the amount to fall due each year, as the same falls due during the whole period

of this proposed extension; and, in case of a failure to levy, collect, or promptly pay over said annual amount, then the remaining bonds to become due, according to their original terms."

This proposition was presented to the county court by Norton at its October Term, 1871. Several of the justices were then present who had attended the July meeting of 1870, on which latter occasion the court, by resolutions, entered upon its records, declared that the bonds had been issued without lawful authority, and were not binding upon the county. Across the record of those resolutions was, however, subsequently written the word "*void*," but by whom, or when, so written, does not appear.

In addition to this evidence, the substantial facts upon which the case went to the jury are indicated in the following charge given by the court at the request of the plaintiffs: —

"That if you credit the testimony, and from it believe that Mr. Norton, as president of the Paducah and Gulf Railroad Company, in October, 1871, appeared before a duly organized county court of Tipton County, and in open court fully explained to it that a consolidation was contemplated between his company and the Mississippi River Railroad Company, and that such consolidation depended upon the fact whether the bonds in controversy were to be paid by the county, and whether it would proceed to levy a tax for the same, and then and there presented the proposition of the said Mississippi company, recited in the resolution of that date, passed by the said county court, and that said Paducah company was then solvent, and owned and operated a railroad from the town of Paducah, in Kentucky, to Troy, in Tennessee, and that no portion of the railroad in Tipton County was then completed, and that but a few thousand dollars had been expended in work thereon, and that the purpose of said consolidation was to complete said road in Tipton County, and to connect it with the line of said Paducah and Gulf road, and that said road has since been completed to the town of Covington, in said county, to the city of Memphis, being a distance of thirty-seven miles, twenty-one whereof are in said Tipton County, and that said Norton communicated to his company the action of said county court at its said Octo-

ber session of 1871, and that in consequence thereof, and in reliance thereupon, said consolidation took place, whereby said Paducah and Memphis railroad was created, and that said latter company thereafter completed the road from Covington to Memphis, and has regularly run and operated the same from the 25th of June, 1873, to this date, and that the plaintiffs in this action, in the ordinary course of trade, and without any notice of ill faith in the procuration of said bonds, gave full value therefor to the said Paducah and Memphis Railroad Company, by furnishing engines to be employed on said road, and that said Paducah and Memphis Railroad Company received said bonds without any notice whatsoever of any fraud in their issuance; then the fact that one or more of the justices of said county court, who originally voted for said subscription of stock, were induced so to do by corrupt means, and all other proofs or matters of fraud, constitute no defence to this action."

To the giving of that charge the county, by its attorney, excepted.

At the request of the county the court charged the jury that "if the railway procured the issuance of the bonds by bribery, fraud, and corruption, that they would be void in the hands of the railway company, just as if they had not been issued; that all persons taking them from the company with notice, or under circumstances to put the vendor on inquiry, would stand in no better plight than the railway company would;" and that "if it appears that there was actual fraud in procuring the bonds, then the plaintiffs would be bound to show that they were *bona fide* holders."

The defendant requested the court to further charge the jury as follows: "That if the plaintiff took them (the bonds) after due, they would stand like the railway company's;" which request was granted, with the modification that "unless the jury believed as stated in the charge given at the request of the plaintiffs:"

"That a party may waive the fraud by subsequent acts, but in order to make this doctrine apply, it must appear that the party waiving was fully apprised of the fraud which he waives. He must know of the fraud, and, knowing, waive it;" which was given with this modification: "Although this is generally

true, it has no application to this case if the jury believe as in the charge stated in favor of the plaintiffs. If one citizen about to buy a demand against another applies to him in good faith to ascertain whether the demand will be paid, and is informed that it will be, and buys in reliance upon such information, the party admitting his obligation will not be permitted to defend, although the admission was made in ignorance of a valid defence."

"That if before a contract which was void, which is no contract, had become a subsisting and valid contract, a constitutional provision intervenes, which took away all power from one of the contracting parties to enter into the contract, then there could be no contract by ratification, because the party would be under disability of contracting either expressly or by ratification. Therefore, if the contract was void in its making, for fraud, and the facts of the fraud were not known, and known waived, before May, 1870, when the new constitution was adopted, then there could be no contract by ratification or otherwise, as all power to make such a contract as this was then, by the mandate of the Constitution, taken away from the county court." That instruction was also granted, with this modification: "That although the general reasoning of this request is correct in legal principle, still, if the jury believe as stated in the charge for the plaintiffs, the defendant will be estopped to set up fraud as a defence, after having induced their purchase by answering to an inquiry of whether they would be paid, that they would be. And if the jury believe that such were the facts in this case, then fraud will not constitute a defence."

"That if the influences which procured the contract were afterwards successfully exerted in concealing the fraud and defeating its discovery and efforts to resist the contract, then there can be no such thing as a waiver; that communities may waive fraud, but more indulgence is extended to them than to individuals; that accepting the road and using it, and paying a part of the consideration in ignorance of the fraud by which a vote was produced, will not be a waiver." This request was given with the same modifications, however, as made in reference to the last two preceding requests by the defendant.

We are unable to perceive that any error of law was committed to the prejudice of the county. The case went to the jury under circumstances quite as favorable to it as the evidence justified. If the facts disclosed in the instructions were believed by the jury to be established by the testimony, its duty was to return a verdict for the plaintiffs. The charge of fraud, bribery, moral coercion, and intimidation applied, it must be observed, to the Mississippi Railroad Company and to the justices composing the county court at the time the original subscription was made, and the bonds issued and delivered. When the court, subsequently, received the written proposition from the railroad company, for an extension of time upon certain conditions, it was distinctly informed that its action would affect and control large business operations in which others were concerned who had no connection with the original subscription, or with the issue of the bonds. The extension of time was accepted upon the terms and conditions set out in the proposition of the company, and without, so far as the record discloses, any dissent among the twenty-two justices present; and, as evidence of its purpose to adhere to the new agreement and provide for the payment of the bonds and coupons, the county court ordered the levy of a tax upon all of the taxable property of the county. We have already seen that at the meeting of the county court held in July, 1870, resolutions were entered of record declaring that the bonds had been issued without lawful authority, and directing such steps to be taken as were necessary to protect the people against the proposed burden. With this record before the justices who composed the court in October, 1871, the proposition for an extension of time was accepted, and an assurance of record was thereby given, that the county would meet the bonds according to the new terms. The force of this action of the court was increased in view of sect. 402 of the Code of Tennessee, adopted in 1858, declaring that "every county is a corporation, and the justices in the court assembled are the representatives of the county and authorized to act for it."

Whether upon the faith of these proceedings in the county court the Paducah and Gulf Railroad Company consolidated with the Mississippi River Railroad Company, was fairly sub-

mitted for the determination of the jury. The new company having become, in virtue of that consolidation, the owner of the assets of the constituent companies, including the bonds in suit, proceeded with the work of construction. There was evidence tending to show that at the time of the consolidation only a few thousand dollars had been expended in building the Mississippi River railroad in Tipton County; that after the consolidation about half a million of dollars had been expended in Tipton County by the Paducah and Memphis Railroad Company; that the road from Memphis to Covington, the county seat of Tipton, a distance of thirty-seven miles (of which twenty-one miles were in Tipton County), had been built and equipped, and trains running thereon regularly, ever since June 25, 1873; that the road had been graded, bridged, and made ready for the cross-ties and rails from Covington to one and a quarter miles north of Ripley, in Lauderdale County; that since the consolidation the road had been completed and equipped from Troy to Trumber, a distance of fifteen miles, and trains run regularly between those places; that the road had been graded, bridged, and cross-tied for the rails from Trumber to Dyersburg, and the right of way secured on about twenty-one miles of the road between Dyersburg and Ripley. This is not all. The stock which Tipton County originally received in payment of its subscription was voted by its official representative in favor of the consolidation, and the county received, in place of its stock in the Mississippi River Railroad Company, stock for like amount in the new company. Besides, the county voted the new stock in favor of the execution of a mortgage for $1,951,000, which was placed upon the property of the company which was formed by the consolidation.

The acceptance by the county court of the terms and conditions set forth in the proposition of Sept. 30, 1871, and its participation, under the circumstances adverted to, by its authorized representatives, in the proceedings which resulted in the consolidation, whereby the situation of the Paducah and Gulf Railroad Company became materially altered, was, in effect, a representation to those interested in that company that the county would not withhold payment of its bonds or coupons, but would meet them according to the terms of the new agree-

ment. By its conduct it induced those interested in the Paducah and Gulf Railroad Company — then solvent, out of debt, and owning and operating a complete railroad from Paducah, Ky., to Troy, Tenn., worth $1,000,000 — to believe that the bonds would constitute a part of the available assets of the new company. The defendants in error received a portion of these bonds as early as March 15, 1873. The integrity of the business transaction by which they acquired them is not questioned by any evidence recited in the record. Nor does it appear that any evidence was offered that impugned in any degree the good faith, in respect of these matters, of those who controlled the Paducah and Gulf Railroad Company, or of those who controlled the Paducah and Memphis Railroad Company subsequent to the consolidation of 1872. The defendants in error obtained the bonds in suit from the Paducah and Memphis Railroad Company, paying value therefor, and, so far as the record discloses, without any reason to suspect their payment would be resisted by the county. In view, then, of the conduct throughout all these proceedings of those who represented the county of Tipton, it is estopped, by every consideration of law, justice, and fair dealing, from disputing its liability to defendants in error upon the bonds in suit. The discovery by the county, in February, 1875, of fraud and corrupt practices upon the part of the Mississippi River Railroad Company, in procuring the issue of the bonds in 1869, cannot be permitted to affect the rights of those who had, in good faith, acquired the bonds in reliance upon the explicit assurance which the county, in effect, gave in October, 1871, that it would provide for the payment of the bonds and their coupons. The defendants in error having obtained the bonds under the circumstances which have been detailed, may rightfully invoke, in support of their claims, any facts which would have estopped the county from disputing the claim of the Paducah and Memphis Railroad Company, had the latter company never parted with the bonds.

There are other grounds arising upon the evidence upon which the judgment below might, perhaps, be sustained, and there are other questions suggested in argument upon which we deem it unnecessary to comment.

MR. JUSTICE SWAYNE and MR. JUSTICE STRONG participated in the decision of this case in conference before their retirement, and we are authorized to say that they concur in this opinion and judgment.

Judgment affirmed.

NOTE. — *County of Tipton* v. *Norton* and *County of Tipton* v. *Edmunds*, error from the same court, were argued at the same time by the same counsel as the preceding case, and, upon its authority, the judgments therein rendered were affirmed.

THE "RICHMOND."

1. Where in a case in admiralty the decree below, determining the liability of the respective vessels in a collision, was rendered before the act of Feb. 16, 1875, c. 77 (18 Stat., pt. 3, p. 315), took effect, this court, the case being properly here on appeal, will re-examine the evidence, and, if the appellant does not show that in the concurring action of the courts below error was committed to his prejudice, the decree will be affirmed.
2. Where, after such a decree, and the taking effect of that act, the ascertainment of the amount of damages sustained by the vessel not in fault was referred to a master, the action of the Circuit Court upon exceptions to his report, all of which relate to questions of fact, will not be reviewed here.

APPEAL from the Circuit Court of the United States for the District of Louisiana.

This was a libel filed by Shirley and others, owners of the steamboat "Sabine." They allege, in substance, that between two and three o'clock of the morning of Feb. 11, 1872, while she was descending the Mississippi River about twelve miles above New Orleans, the steamer "Richmond" ran into and sunk her; that the collision was owing entirely to the gross and culpable negligence of the officers and pilot of the "Richmond;" and that the libellants suffered damages to the sum of $37,500.

The owners of the "Richmond" filed an answer and cross-libel, claiming $12,000 damages.

The Merchants' Mutual Insurance Company filed its libel against the "Richmond" and the "Sabine," alleging that it

had insured the cargo of the "Sabine," and paid a large sum on the policy, and that both vessels were at fault.

Other intervenors appeared and filed their respective libels.

The suits were consolidated. The District Court dismissed the libel April 14, 1873. An appeal was prayed for and allowed to the Circuit Court, which adjudged and decreed, April 19, 1875, that the libel of the "Sabine" be dismissed with costs; that the "Richmond" recover of the "Sabine" all damages the "Richmond" suffered by the collision; that the libel of the Merchants' Mutual Insurance Company against the "Sabine" and the "Richmond" be dismissed as to the "Richmond;" and that said company and intervenors have judgment against N. C. Selby, master of the steamer "Sabine," for all damages sustained by the company by reason of said collision, with privilege on any balance of the proceeds in the registry arising from the sale of the "Sabine."

It was further ordered that it be referred to J. W. Gurley, United States commissioner, to ascertain and report the damage sustained by the "Richmond," the Merchants' Mutual Insurance Company, and the intervenors. He reported, June 4, 1875, that the "Richmond" had sustained damages in the sum of $7,392.60. He subsequently filed a report of the losses of the Merchants' Mutual Insurance Company and of the various insurance companies, subrogees of the individual intervenors.

The court, March 11, 1876, confirmed the report and condemned the sureties on the bond of the "Sabine" to pay the amount for which they respectively bound themselves. The owners of the "Sabine" and the various insurance companies prayed an appeal from the decrees of the Circuit Court.

The insurance companies who claimed to be subrogated to the rights of the individual intervenors filed no new pleadings.

Mr. Bentinck Egan, *Mr. R. H. Marr*, and *Mr. Charles B. Singleton* for the appellants.

Mr. Given Campbell, *contra.*

MR. CHIEF JUSTICE WAITE delivered the opinion of the court.

This is an appeal from a decree in admiralty which was

entered before the act of Feb. 16, 1875, c. 77, went into effect; consequently the whole case comes up. On examination we find that, so far as the merits are concerned, the questions involved are of fact only. Two courts have already found against the appellants. Under such circumstances the burden is on the appellants to show the error, with every presumption in favor of the decrees below. *The S. B. Wheeler*, 20 Wall. 385. The testimony is voluminous and conflicting, but it certainly makes no such clear case in favor of the appellants as will justify us in reversing the decrees against them.

The decree of the Circuit Court will be consequently affirmed, and as it will serve no useful purpose to enter into a discussion of the evidence in detail, no further opinion will be delivered. Having reached this conclusion, it is unnecessary to consider how much of the case has been brought here by the appeals that were taken.

Decree affirmed.

A petition for rehearing having been filed, MR. CHIEF JUSTICE WAITE delivered the opinion of the court.

We are asked to rehear this case on two grounds: 1, because on the evidence the decree below should have been reversed; and, 2, because the exceptions to the commissioner's report were not considered.

Notwithstanding what has been said in the briefs filed with this application, we still think the question of the liability of the "Richmond" is one of fact only. She was not a carrier of the "Sabine's" cargo, and consequently not liable in any respect as such. If not at fault for the collision, she is no more liable for damages to the cargo of the "Sabine" than she is for the damages to the "Sabine," on which the cargo was carried.

So far as the "Sabine" or her cargo, therefore, is concerned, the only question presented on this application is whether, in law, the Richmond was in fault for the collision, and that depends on the fact whether the "Sabine" had "fled to the wall," and for that purpose had gone closer to the left-hand shore than her pilot had ever seen a boat before, and the "Richmond" followed her. On that question of fact the case hinges, for if

the "Richmond" did what is thus claimed against her, the law clearly charges her with fault. As to the fact the testimony is voluminous and conflicting. Two courts have already, on the same testimony, decided against the "Sabine" and the insurers of her cargo. As long ago as 1861 we said, speaking through Mr. Justice Grier, in the case of *The Ship Marcellus*, 1 Black, 414: "We have had occasion to remark more than once that when both courts below have concurred in the decision of questions of fact, . . . parties ought not to expect this court to reverse such a decree by raising a doubt founded on the number or credibility of witnesses. The appellant in such a case has all presumptions against him, and the burden is cast on him to prove affirmatively some mistake made by the judge below in the law or in the evidence. It will not do to show that on one theory, supported by some witnesses, a different decree might have been rendered, provided there be sufficient evidence to be found on the record to establish the one that was rendered." This rule, thus stated from the preceding cases, was uniformly followed afterwards until the act of Feb. 16, 1875, c. 77 (18 Stat., pt. 3, p. 315), which took effect on the first day of the following May, relieved us from the labor of weighing evidence. *Newell* v. *Norton and Ship*, 3 Wall. 257; *The Hypodame*, 6 id. 216; *The S. B. Wheeler*, 20 id. 385; *The Lady Pike*, 21 id. 1. It is true that, notwithstanding this rule, we were required "to re-examine the facts as well as the law of the case" (*The Baltimore*, 8 id. 377); but we did not reverse except in a clear case. Such was the well-established rule of decision.

The decree on the merits was rendered April 19, 1875, a few days before the act of 1875 took effect. We were, therefore, as we thought at the hearing, compelled to consider and weigh the evidence on the question involved when *that* decree was rendered. We are clear now, as we were on the first hearing, that the presumptions in favor of the correctness of the two decrees below have not been overcome. If one set of witnesses are to be believed, the decree is right; if the other, it is wrong. There is, to say the least, no such preponderance in favor of the appellants as to justify us in overruling the decisions of the two courts below.

As to the exceptions to the report of the commissioner. It was presented June 4, 1875, after the law of 1875 went into effect. The exceptions were filed the next day. All the exceptions that were argued in the court below or here relate only to questions of fact, depending on the weight of evidence. The court omitted to find the facts, and the case comes here on the evidence. This, since the act of 1875, we are not bound to consider. If the appellants had desired to press their exceptions, they should have got a finding of the facts, so as to present questions of law alone. The case on its merits came up under the old law, and we were compelled to consider the testimony, but on the master's report the act of 1875 was applicable, and our review is confined to questions of law.

Petition denied.

INSURANCE COMPANY *v.* NELSON.

A suit was brought to foreclose a mortgage made by husband and wife of land, a part of which belonged to him and a part to her. Her answer sets up that he obtained her signature by physical violence, and that he and the officer who took her acknowledgment, both of whom died before her answer was filed, represented to her that the mortgage did not cover her land. *Held*, that her testimony is not sufficient to impeach the mortgage.

APPEAL from the Circuit Court of the United States for the District of Kansas.

The facts are stated in the opinion of the court.

Mr. D. G. Hooker for the appellant.

Mr. John J. Ingalls for the appellee.

MR. JUSTICE WOODS delivered the opinion of the court.

The Northwestern Mutual Life Insurance Company, appellant, filed its bill in the court below for the foreclosure of a mortgage on certain lots in the city of Wyandotte, and a tract of land containing sixty acres situate outside that city, all in the county of Wyandotte, in the State of Kansas, alleged to have been executed by William Cook and Jane

Cook, his wife, dated Dec. 10, 1874, to secure his bond for $5,000.

The city lots were his property, but the tract of sixty acres was the separate property of his wife.

She filed her answer, in which she admitted the execution of the bond, but denied the execution of the mortgage as set forth in the bill of complaint. Her account of the execution of the mortgage, as given in her answer, was as follows: —

"This defendant alleges that, on or about the time mentioned in the plaintiff's bill as the time when said bond and mortgage therein set out were executed, the said William Cook, her husband, requested her (this defendant) to sign a mortgage to the plaintiff as mortgagee, to secure a loan of money to be loaned by the plaintiff to him, said William Cook, her husband, and informed her that such mortgage was upon certain lots of his, in Wyandotte City, and upon this defendant asking him, her said husband, to let her read the said mortgage, he, her said husband, refused to permit this defendant to read the same. This defendant then asked whether said mortgage covered her land outside the city, and was told by her said husband that it did not; but this defendant refused to sign the same, whereupon her said husband took hold of this defendant, and by physical force seated this defendant in a chair at the table and put a pen in her hand, and placing his hands on this defendant's shoulder and arm, commanded and compelled her to write her name, which she did and not otherwise, and not of her own free will and accord, but that she was compelled to sign said mortgage by force and threats of her said husband, and that the same was signed under duress, by actual force, physical coercion, and the use of violence and compulsion of her said husband, and through and by such duress, force, physical coercion, and not otherwise, she was made to sign such mortgage, and this defendant avers and alleges that such mortgage is not her deed.

"And this defendant further answering, says that afterwards, when Alison Crockett, the officer certifying to the acknowledgment of said mortgage, came into the room where this defendant was, to take such acknowledgment, said Crockett informed defendant that said mortgage was upon some city lots belonging

to her husband and did not cover her land. That defendant believed said declaration to be true; that Crockett did not read said mortgage to defendant, or otherwise explain the contents thereof, except as herein stated; that defendant did not read said mortgage, because she believed the declaration of said Crockett to be true, and feared to offend her husband by refusing to acknowledge the signature to said mortgage as hers."

Her answer further alleged as follows:—

"The said Alison Crockett was the agent of the plaintiff herein, in loaning money to her said husband, William Cook, and taking said mortgage in security therefor; and when he took said acknowledgment and made the representations aforesaid, that this defendant's land was not included in said mortgage, he was acting as the agent of the plaintiff herein, and that he then had full knowledge and well knew that the land above described (the sixty-acre tract) was the property of this defendant and was included in said mortgage."

To this answer the general replication was filed.

William Cook having died before the commencement of the suit, George P. Nelson, administrator of his estate, and other defendants, answered; but their answers are immaterial, as no questions are involved in this appeal except such as arise upon the answer of Jane Cook.

Upon the issue, made by the pleadings, proofs were taken, and upon final hearing the court made a decree foreclosing the mortgage upon the city lots, but as to the sixty-acre tract the court found for defendant, Jane Cook, and declared that the mortgage was not a lien thereon, and omitted said tract from the decree of sale.

The insurance company, being dissatisfied with the decree of the court below, has brought the case here on appeal.

The defence relied on is, that the signature of Jane Cook to the mortgage was obtained by means of the false representations of her husband and by compulsion through the application of physical force, and that her acknowledgment was obtained by means of the false representations of her husband and the officer before whom she made it, in respect to the contents of the mortgage.

The defence rests mainly upon the answer, and upon the deposition of Mrs. Cook.

The only person present besides Mrs. Cook, when the mortgage was signed by her was her husband. There were only two persons present besides her when the acknowledgment of the mortgage was taken. These were her husband, and Alison Crockett, register of deeds for Wyandotte County, before whom the acknowledgment was made, both of whom are dead. She is, therefore, the only living witness of what transpired when the mortgage was signed and acknowledged.

She admitted her signature to the mortgage, but said it was obtained in the following manner: Cook, her husband, came in and asked her to sign the mortgage. He stated that it covered the town lots in Wyandotte. She declined to sign it. What then took place is thus stated by her: "He said if I did not sign that mortgage he would come off down town and go to drinking till he killed himself; these are just the words he said, and then from that he said he was going to compel me to sign it, and then as I say he forced me into the chair, he took me and set me in the chair and held me there, and took the pen and put it in my hand and guided my hand and wrote my name there."

In answer to the question, "How is it that your name is so well written on the mortgage?" she said, "After he got through he took the pen and straightened the places."

She further testified as follows: —

"After the mortgage was signed, Crockett came in. He asked me, 'Whore is the paper, are you going to sign?' Mr. Cook spoke up and said, 'It is already signed.' He asked me then if I signed it. I did not say anything. Mr. Cook stood between me and Mr. Crockett; he as much as told me to keep my mouth shut by his motions. He looked me right in the face."

She further testified that Crockett did not explain to her the contents of the mortgage before taking her acknowledgment. He simply told her that the mortgage was nothing to injure her, that it was on property down on Minnesota Avenue.

The complainant introduced in evidence the original mortgage and also the original of a draft, which Mrs. Cook testified

bore her indorsement, and her original deposition in this case bearing her signature. The evidence of three experts in handwriting was also introduced for complainant. They all testified that her signature to the mortgage and deposition and her indorsement of the draft were written by the same person; that the signature to the mortgage appeared to be in the same natural and voluntary hand as the other signatures, and that upon inspection through a glass showed no signs of having been touched up or altered.

The three original signatures were exhibited to the court. An inspection of them with the naked eye satisfies us that her statement that her signature to the mortgage was made in the manner described in her deposition cannot be true. It is as free and natural as her signature to her deposition or her indorsement of the draft. It bears no signs of constraint, as would inevitably have been the case if she had reluctantly held the pen and it had been guided by another hand and will. It bears no signs of any change or filling up or straightening. On this subject the inspection of the signatures leaves no doubt in our minds. Her narrative in regard to the manner in which her signature to the mortgage was made is contradicted by the signature itself, and a comparison of it with the others put in evidence. How, then, can we give credence to her testimony, touching the representations of her husband in relation to the contents of the mortgage and her account of the manner in which her acknowledgment was taken?

When a deed or mortgage, regular in appearance, and bearing the genuine signature and duly certified acknowledgment of the grantor or mortgagor is attacked, the evidence to impeach it should be clear and convincing.

In the case of *Howland* v. *Blake* (97 U. S. 624) this court said: "The burden rests upon the moving party of overcoming the strong presumption arising from the terms of a written instrument. If the proofs were doubtful and unsatisfactory, if there is a failure to overcome this presumption by testimony entirely plain and convincing beyond reasonable controversy, the writing will be held to express correctly the intention of the parties. A judgment of the court, a deliberate deed or writing, are of too much solemnity to be brushed away by

loose and inconclusive testimony." See also *Shelburne* v. *Inchiquin*, 1 Bro. Ch. 338, 341; *Henkle* v. *Royal Assurance Co.*, 1 Ves. Sen. 317; *The Marquis Townshend* v. *Stungroom*, 6 Ves. Jr. 328, 338; *Gillespie* v. *Moon*, 2 Johns. (N. Y.) Ch. 585; *Lyman* v. *United Insurance Co.*, id. 630; *Graves* v. *Boston Marine Insurance Co.*, 2 Cranch, 444.

The acknowledgment of a deed can only be impeached for fraud, and the evidence of fraud must be clear and convincing. *Russell* v. *Baptist Theological Union*, 73 Ill. 337.

In this case, the testimony of Mrs. Cook touching the manner in which her signature to the mortgage was obtained is so incredible, that her account of the way in which her acknowledgment was taken is entitled to little weight.

We have not thought it necessary to consider the question whether, under the statute of Kansas, the communications between her and her late husband, to which she testified, are admissible in evidence.

It is unnecessary to discuss the other evidence in this case. It is sufficient to say that it is entirely circumstantial, and its weight is decidedly against the defence set up.

We are of opinion that there was no evidence in the case sufficient to overcome the effect of the mortgage and the officer's certificate. The Circuit Court should, therefore, not have excepted the sixty-acre tract from its decree of foreclosure. For this error the decree must be reversed, and the cause remanded with directions to enter a decree for the complainant in conformity with this opinion; and it is

So ordered.

DUBUCLET v. LOUISIANA.

A suit instituted to try the title of a party to a State office, whereof he is the incumbent, and whereto he was, by the constituted authorities of the State, duly declared to be elected pursuant to her laws, cannot be removed from one of her courts into the Circuit Court of the United States on his petition, setting forth that, by reason of bribery and threats, colored persons who were qualified to vote at the election, and who would have voted for him, were deterred from voting, and that the returning board rejected the votes of the parishes where such illegal practices prevailed.

ERROR to the Circuit Court of the United States for the District of Louisiana.

The facts are stated in the opinion of the court.

Mr. John Ray for the plaintiff in error.

Mr. Conway Robinson, contra.

MR. CHIEF JUSTICE WAITE delivered the opinion of the court.

This suit was brought by the State of Louisiana on the relation of John C. Moncure, in the Sixth District Court for the parish of Orleans, on the 20th of March, 1877, to try the title of Dubuclet, the plaintiff in error, to the office of treasurer of state, the duties of which he was performing under a commission from the governor, dated Dec. 31, 1874. The allegations of the petition are, in substance, that Moncure was in fact elected to the office at an election which was held on the 2d of November, 1874, but that the returning board, by a false and illegal canvass and compilation of the votes, declared that a majority were in favor of Dubuclet, who was thereupon commissioned.

On the 2d of April, 1877, Dubuclet filed his petition for the removal of the suit to the Circuit Court of the United States for the District of Louisiana. This petition was granted by the State court, but when the case got to the Circuit Court it was remanded on the ground that it was not in law removable. To reverse that order of the Circuit Court this writ of error was brought.

It is conceded that, according to the decisions in *Strauder* v. *West Virginia* (100 U. S. 303) and *Virginia* v. *Rives* (id. 313), a case was not made for removal under sect. 641, Rev. Stat. We think it equally clear that the showing in the petition was not sufficient to effect a transfer under the second section of the act of March 3, 1875, c. 137, 18 Stat. 470. The averments relied on for this purpose are as follows: —

"Petitioner further represents that, at the election held in this State on the day of November, A. D. 1874, for state treasurer, at which petitioner was a candidate, that in the parishes of De Soto, Bienville, Union, Grant, and other parishes of the State, there were more than five thousand citizens of color of the State of Louisiana and of the United States qualified by law to vote at said election, and who offered to vote, and if they had been permitted to vote would have voted for petitioner, and against Jno. C. Moncure, relator, and who were prevented, hindered, and controlled and intimidated from voting for petitioner by relator Moncure and those acting in his interest, by means of bribery, threats of depriving them of employment and occupation, and of ejecting them from rented houses, lands, and other property, and by threats of refusing to renew leases or contracts for labor, and by threats of violence to them or their families, in violation of their and your petitioner's civil rights, and in violation of the laws of the United States, made and enacted to protect the civil rights of citizens of color and previous condition of servitude.

"Petitioner further represents that, in consequence of said illegal acts and violation of the laws of the State of Louisiana and the United States, by relator Moncure, and those acting in his interest, at and before said election, and for the purpose of defeating your petitioner for treasurer of the State of Louisiana, that the returning officers of election of the State of Louisiana, in accordance to law, and their sworn duty, duly returned your petitioner elected, by rejecting the votes cast in the several parishes and at the several polls where relators, in their petition, complain the vote should have been counted in his, Moncure's favor, and where they complain the vote should not have been counted in favor of petitioner.

"Petitioner further represents that the suit of the relator is for the object and purpose of depriving your petitioner of the office of treasurer of the State of Louisiana, by reason of the denial of the aforesaid citizens the right to vote on account of race, color, and previous condition of servitude, in violation of the laws of the United States made to protect the equal civil rights of petitioner and those offering to vote for him, and by reason of the right guaranteed by the fifteenth article of amendment to the Constitution of the United States."

If all that is here alleged be true, it does not show a case "arising under the Constitution or laws of the United States." If Moncure was guilty of what is charged against him, he had violated the provisions of sect. 5507 of the Revised Statutes; but that gave Dubuclet no right, under the laws of the United States, to have the entire vote of the designated parishes thrown out by the canvassers of the election. Moncure might have been prosecuted for what he had done, but neither his prosecution, conviction, nor punishment would of itself set aside the vote of the parishes or polls as returned. The effect of such conduct on the validity of the election depended, so far as this record shows, on the laws of the State and not on those of the United States. Whether Moncure and those in his interest have been guilty of a crime punishable by law, may depend alone on the laws of the United States; but the United States have not as yet attempted to declare what effect such unlawful acts shall have on the election of a purely State officer. The laws of Louisiana, it is conceded, gave colored men the right to vote at all elections, and because in this case they were prevented by intimidation from exercising that privilege, the properly constituted canvassing board of the State, acting, as is alleged by Dubuclet in his petition, "in accordance to law and their sworn duty," rejected all votes from the parishes and polls where intimidation occurred, and thus found that he was elected. Had the vote of these parishes been counted, the result would have been in favor of Moncure. Thus, according to Dubuclet's own showing, his right to his office depends on the laws of the State. Because the laws of the State required the returning board to reject the votes of the parishes and polls where intimidation, whether of white or colored voters,

materially interfered with the election, the majority of the votes cast at the election, which could be counted, were in his favor, and, therefore, he is in office. Such is in effect his allegation in the petition for removal. Clearly, then, on his own showing, his right arises not so much under the Constitution and laws of the United States as under those of the State.

Sect. 2010 Revised Statutes gives one who "is defeated or deprived of his election," to such an office as Dubuclet holds, the right of suing for his office in the courts of the United States, "where it appears that the sole question touching the title to such office arises out of the denial of the right to vote to citizens who so offered to vote, on account of race, color, or previous condition of servitude." That certainly is not this case; for Dubuclet, instead of being defeated or deprived of his election, is now in office under his election duly declared pursuant to the laws of the State, and exercising all the duties of his place and enjoying all its privileges. This section provides for an original suit by one out of office to get in, but not for the removal of a suit against one in office to put him out. It is unnecessary to discuss the validity of the law in its application to purely State offices, for it does not affect this case. It is one thing to have the right to sue in the courts of the United States, and another to transfer to that jurisdiction a suit lawfully begun in a State court.

We think it clear that the Circuit Court ought not to have taken jurisdiction of the case.

Judgment affirmed.

140-365

103 554
L.ed 496
141 556

103 554
L.ed 496
148 73

103 554
L.ed 496
631 762

SUPERVISORS v. KENNICOTT.

1. A stipulation, signed by the parties or their attorneys, and filed with the clerk of the Circuit Court, submitting a civil cause for trial on an agreed statement of facts, is "a stipulation in writing waiving a jury," within the meaning of sect. 649 of the Revised Statutes.
2. This court has authority, under sect. 700 of the Revised Statutes, to determine, as in case of a special verdict, whether the facts set forth in such statement are sufficient in law to support the judgment, although the finding of the Circuit Court on them be in form general.
3. An appeal was taken by a county from a decree of foreclosure rendered against it upon a mortgage of its lands, to secure the bonds of a railroad company. The decree was affirmed, and the costs of the appeal were paid. *Held*, that the liability of the county and its sureties upon the *supersedeas* bond is limited to such damages as resulted from a delay in the sale of the lands, and does not include the balance remaining unpaid of the decree after applying thereto the proceeds of the sale, nor the interest thereon which accrued pending the appeal.

ERROR to the Circuit Court of the United States for the Southern District of Illinois.

The facts are stated in the opinion of the court.

The case was argued by *Mr. C. C. Boggs* for the plaintiff in error, and by *Samuel J. Crooks* for the defendant in error.

MR. CHIEF JUSTICE WAITE delivered the opinion of the court.

The County of Wayne, Illinois, mortgaged its swamp and overflowed lands to secure an issue of bonds by the Mt. Vernon Railroad Company. The county was in no way bound for the payment of the debt. It simply mortgaged its lands for the benefit of the company. Default having been made in the payment of the bonds, a suit was begun in the Circuit Court of the United States for the Southern District of Illinois to foreclose the mortgage. In this suit a decree was entered, June 25, 1874, finding the amount due from the company on its bonds, and directing that the lands of the county be sold and the proceeds applied to the debt. From this decree the county appealed to this court, giving a bond, with a large number of persons as sureties, in the penal sum of $40,000, conditioned according to law, for a *supersedeas*. At the October Term,

1876, the decree below was affirmed here with costs and the cause remanded. *Supervisors* v. *Kennicott*, 94 U. S. 498.

This was a suit on the appeal and *supersedeas* bond, the allegations in the declaration as to damages being as follows: —

"A large amount of damages hath accrued to the said plaintiffs by the failure of the said board of supervisors to make good their plea, to wit, the amount of $100,000, consisting of $40,000 of interest which accrued on said decree during the pendency of said appeal, which is wholly unpaid, and of $200,000 of said decree remaining unsatisfied by sale of the lands ordered by said decree, and of $50,000 depreciation in the value of said lands during the pendency of said appeal, and of $25,000, attorneys' fees for attending to said appeal, and $50,000 taxes on said lands during the pendency of said appeal."

The bill of exceptions shows that the case was submitted to the court on an agreed state of facts, it being stipulated "that pleas proper in such case were on file." This agreed statement purported to be signed by the attorneys for the plaintiff, the attorney for the county, and the attorney for the sureties on the bond. The part material to the questions presented here is as follows: —

"It is further agreed, that, so far as the right of recovery in this case is concerned, it shall be deemed and considered that a sale of the lands in the decree described had been made and approved by the court before the commencement of this suit, and that the lands in the decree and mortgage and trust deed mentioned did not bring enough at said sale to satisfy and pay the amount due the complainant under the decree as holders of the bonds of said railroad company by an amount largely over the amount of the appeal bond in this cause sued on, and that the interest at the legal rate on the aggregate amount of the bonds of the railroad company found due the complainants as established by the decree during the pendency of said appeal would amount to a sum largely exceeding the amount of the appeal bond in this cause sued on."

It was further admitted, as appears of record, that the costs of the appeal had been paid.

Upon the facts so stated and agreed the court found generally for the plaintiffs on the issue and that they had sustained damage to the amount of $40,000, the penalty of the bond. Judgment was given accordingly. To reverse that judgment this writ of error has been prosecuted.

It is contended by the defendants in error that the case cannot be re-examined here on its merits, — 1, because the record does not show that a "stipulation in writing waiving a jury" was filed with the clerk, as required by sect. 649 of the Revised Statutes; and, 2, because the finding of the court was in form general, and not special, as required by sect. 700.

1. As to the waiver of a jury. The record does contain a stipulation in writing signed by the attorneys of the respective parties, submitting the cause to the court for trial on the agreed facts. As a case cannot be submitted to the court for trial without waiving a jury, a stipulation to submit, especially if it be on agreed facts, is of itself a sufficient waiver to meet the requirements of sect. 649.

2. As to the finding. Even before the act of 1865, c. 86, sect. 4 (13 Stat. 501, reproduced in sects. 649 and 700, Rev. Stat.), it was always held that a judgment on agreed facts spread at large on the record could be reviewed here on a writ of error. *United States* v. *Eliason*, 16 Pet. 291; *Stimpson* v. *Baltimore & Susquehanna Railroad Co.*, 10 How. 329; *Graham* v. *Bayne*, 18 id. 60; *Suydam* v. *Williamson*, 20 id. 427; *Campbell* v. *Boyreau*, 21 id. 223; *Burr* v. *Des Moines Company*, 1 Wall. 99. Such a statement was considered to be equivalent to a special verdict and to present questions of law alone for the consideration of the court. It is manifest that the act of 1865 was not intended to interfere with this practice. The evident object of that legislation was to give special findings the same effect for the purposes of a writ of error as a special verdict or an agreed case.

This record shows distinctly that the court was only required to determine whether in law, on the agreed facts, the defendants were liable on their bond. It is true that in the judgment as entered it is stated that the court found the issue in favor of the plaintiffs, but that, when read in connection with the bill of exceptions, is no more than a declaration that the court

found the law to be in favor of the plaintiff on the case as stated.

There were in fact no pleadings after the declaration, and the effect of the stipulation that pleas proper to the case were on file was that the pleadings presented in form the case as stated, and left nothing for the court to do but to enter judgment thereon. There was no issue but of law, and that the court found for the plaintiffs. The same case is brought here by the record, and we are entirely satisfied it is one we have the power to review.

This brings us to the consideration of the assignment of errors, which is to the effect that the court was wrong in giving judgment for the plaintiffs. Sect. 1000 of the Revised Statutes provides that when an appeal "is a *supersedeas* and stays execution," the security must be that the appellant "shall prosecute his appeal to effect, and, if he fails to make his plea good, shall answer all damages and costs." In regulating the practice under this statute, we, by our Rule 29, provide that in suits on mortgages "indemnity . . . is only required in an amount sufficient to secure the sum recovered, for the use and detention of the property, and the costs of the suit, and 'just damages for delay,' and costs and interest on the appeal." The damages to be answered for are clearly only such as are incident to the plea that fails, that is to say, the appeal that is taken.

The appeal of Wayne County was from a decree which subjected its lands to the payment of the debt of the railroad company. By taking the appeal no new obligations were assumed in respect to the debt. Clearly, then, the damages which the county and its sureties bound themselves to answer must have been such only as followed from the delay in the sale of the property. That does not necessarily imply an obligation to pay the balance which remains of the mortgage debt after the entire proceeds of the lands have been applied to its satisfaction.

In *Jerome* v. *McCarter* (21 Wall. 17), we held that our rule did not require security for the payment of all the accumulation of interest on the mortgage debt pending the appeal, but only indemnity against loss by reason of such accumulation,

the amount of which would depend in each case on its own facts.

The damages in this case claimed by the plaintiffs are, 1, for interest on the debt which accrued during the appeal; 2, the balance of the decree which remained unsatisfied after the sale; 3, depreciation in the value of the lands; 4, attorney's fees; and, 5, taxes on the lands. No claim is made for the use and detention of the property otherwise than in this way. The agreed case shows that there was an accumulation of interest on the debt during the appeal largely exceeding the penalty of the bond, and that a balance of the mortgage debt, also much more than the penalty of the bond, was left unpaid when the proceeds of the sale had all been applied in accordance with the terms of the decree. This is the extent of what was agreed on. There is no statement that the lands had depreciated in value or that taxes had accumulated. Neither is it stated that any loss had actually accrued to the appellees by reason of the stay of sale. So far as appears, the lands may have increased in value to an amount larger than the accumulation of interest, and the taxes may have been paid. The single question, therefore, was presented to the court, whether on the agreed facts the county and its sureties were liable in law to the extent of their bond for the accumulation of interest or the balance of the mortgage debt. The judgment was to the effect that they were. In this we think there was error. Upon the agreed facts no damages had resulted from the appeal for which the county could in law be required to answer, and the judgment should have been for the defendants.

There were other rulings presented by the bill of exceptions, but as upon the whole case as made there can be no recovery, we have considered it unnecessary to state them.

The judgment of the Circuit Court will be reversed and the cause remanded for further proceedings to be had therein not inconsistent with this opinion; and it is

So ordered.

COUNTY OF OUACHITA v. WOLCOTT.

1. Warrants issued by a county in Arkansas are not negotiable paper in the sense of the law merchant.
2. Where the county court has fixed, by its order, a time for calling in the warrants for redemption, classification, or other lawful purpose, the holder, who neglects or refuses to present them, as required by the order, and the notice thereof given, conformably to the statute, has no right of action against the county to enforce the payment of them.

ERROR to the Circuit Court of the United States for the Eastern District of Arkansas.

The facts are stated in the opinion of the court.

Mr. Augustus H. Garland and *Mr. F. W. Compton* for the plaintiff in error.

Mr. U. M. Rose, contra.

MR. JUSTICE MILLER delivered the opinion of the court.

This action was commenced March 10, 1876, on fifty-four county warrants of Ouachita County, of the State of Arkansas, the plaintiff being a citizen of another State. The defence was that the county court of the county in conformity to the act of the Arkansas legislature of Jan. 6, 1857, made an order Jan. 4, 1876, calling in all the outstanding warrants of the county, including those sued on in this case, for the purpose of examination, cancellation, and reissue, fixing Friday the seventh day of April of that year as the limit of time for presenting them. All holders were notified to deposit them with the clerk any time prior to that date, and that on their failure to do so they would be forever barred from any claim thereon against the county. These warrants not being presented, were, four days after that date, formally declared by the county court to be barred. At the time of the original order calling them in they were the property of A. A. Tufts, a citizen of the State of Arkansas, who, some six weeks thereafter, sold them to Henry M. Cooper, also a citizen of that State, both of whom had legal and actual notice of said order.

On these facts the circuit judge was of opinion that as the plaintiff was a citizen of another State, and had brought the present suit before the time limited for bringing in the warrants under the order of the county court, they were not barred under the statute, while the district judge was of opinion that, because of the failure to comply with that order, the suit could not be maintained. Judgment was rendered April 8, 1878, in favor of the plaintiff, and the county removed the case here.

The circuit judge does not appear to have rested his judgment upon any idea that the statute of Arkansas violated the contract, and was, therefore, void. There is no foundation for such a proposition, for the statute had been the law of the State for seventeen years when the warrants were issued. They were, therefore, subject to its operation. Nor is there any objection to this defence on the ground that the warrants were negotiable paper in the mercantile sense. This proposition is carefully considered and overruled in the opinion of this court, delivered at this term, in *Wall* v. *County of Monroe*, *supra*, p. 74.

But the citizenship of the plaintiff and the right to sue in the Federal court seems to have been the main point on which the judgment of the circuit judge rested.

Certainly, if the purpose or effect of the statute of Arkansas was to deprive a citizen of another State of his right under the act of Congress to prosecute any legal remedy he may have in that court, it should to that extent be disregarded. And the circuit judge probably treated the Circuit Court and the county court as courts of co-ordinate jurisdiction over the same subject and the same parties, and, therefore, disregarded the final judgment of the county court barring the claim of the holder which was entered during the pendency of the suit in the Circuit Court. If this manner of looking at the jurisdiction of the two courts were the true one, the result reached by the court would not follow. For the county court, according to the course of procedure prescribed by the statute, having first commenced proceedings, of which the then holder of the warrants had due notice, and they not being negotiable as mercantile paper, that judgment was prop-

erly pleadable *puis darrein continuance* as a defence to the action.

But we do not think this is the correct mode of viewing the matter.

The statute of Arkansas, though a peculiar one, is a law which the legislature of that State had a right to make, and it is valid as to all county warrants issued after its enactment. It was designed to enable the officers who had charge of the financial affairs of the county to bring before them for review, adjustment, and renewal all the outstanding orders of the county, that they might know the amount of the debt, detect forgeries and frauds, incorporate interest which had been long standing in a new warrant with the principal, assign each warrant to payment out of its appropriate fund, and make arrangements for payment according to priority or other just claim of preference. There can be no doubt of the legislative authority to do this, and, as a means of enforcing the power thus conferred, to declare that warrants not presented after due notice shall no longer exist as debts against the county.

We see no reason to hold that such a proceeding is designed to deprive a holder of these warrants of his right of action in a court of the United States. The effect of it is the same in the State and the Federal courts. The neglect of the holder to perform the duty which the law imposed on him is a defence in either court. If he had presented his warrants, they would probably have been reissued, and this might have been a good replication to the plea; or he could have sued in the same court on his new warrants.

If, after presenting his warrants in due time, they had been illegally declared void, or rejected, the matter might have been inquired into by the court. But he had no right to disregard the law, which was a part of the contract on which they were issued, or to seek to evade it by a suit in the Circuit Court, after receiving notice that he was called on to comply with it. His right to sue in the Circuit Court is not denied or refused; but when that court comes to decide his case, the decision must be governed by the law of the State under which such

non-negotiable warrants were issued, by one of its municipal bodies.

It is ordered to be certified that the plea and the facts certified to us constitute a good defence.

Judgment reversed.

HARTER, v. KERNOCHAN.

387-771
107-709
138-395
140-46
108
L.ed 411
54 f 8

1. A township in Illinois and a taxpayer thereof, on behalf of himself and other resident taxpayers, filed their bill in a court of that State against certain State, county, and township officers and the "unknown owners and holders" of certain township bonds, each payable in the sum of $1,000. The bill prayed for an injunction to restrain the levy and collection of a tax to pay the principal of the bonds or any interest thereon. A., a citizen of another State, was the owner of all of them. *Held*, that he was entitled, under the act of March 3, 1875, c. 137 (18 Stat., pt. 3, p. 470), to remove the suit to the Circuit Court of the United States.
2. A decree was rendered by the State court against A. by default, although he was not summoned, nor served with a copy of the bill or any notice of the pendency of the suit. On his application within the prescribed period the decree was set aside, and he thereupon filed his petition to remove the cause. *Held*, that it was filed in due time.
3. Neither the act of the legislature of Illinois, entitled "An Act to incorporate the Illinois Southeastern Railway Company," approved Feb. 25, 1867, authorizing townships to make donations to that company, nor the amendatory act of Feb. 24, 1869, authorizing the issue of township bonds, for the amount so donated, is in conflict with the Constitution of the State.
4. The bonds of the township of Harter, dated April 1, 1880, signed by the supervisor and countersigned by the clerk of the township, reciting that they are issued in pursuance of the authority conferred by those acts and an election of the legal voters of the township, held on the tenth day of November, 1868, under their provisions, are valid obligations of the township, although the donation was voted to the Illinois Southeastern Railway Company, and they were delivered to a corporation formed, pursuant to law, by the consolidation of that company with another.
5. As the records of the township show that the bonds were directed to be issued and delivered to the new company, the township is, as against a *bona fide* holder of them for value, estopped from denying their validity.

APPEAL from the Circuit Court of the United States for the Southern District of Illinois.

The facts are stated in the opinion of the court.

Mr. W. J. Henry for the appellant.
Mr. George A. Sanders, contra.

MR. JUSTICE HARLAN delivered the opinion of the court.

This suit involves the liability of the township of Harter, in the county of Clay, State of Illinois, upon certain bonds, signed by its supervisor, countersigned by its clerk, and issued, in its name, under date of April 1, 1870. They were each made payable in the sum of $1,000 to the Illinois Southeastern Railway Company or bearer, thirty years after date, with interest at the rate of ten per cent per annum; the right, however, being reserved to the township to make payment at any time after five years from date of issue. Each recites that it is one of a series "issued by said township to aid in the construction of the Illinois Southeastern Railway, in pursuance of the authority conferred by an act of the General Assembly of the State of Illinois, entitled 'An Act to incorporate the Illinois Southeastern Railway Company, approved Feb. 25, 1867,' and an act amendatory thereof, approved Feb. 24, 1869, and an election of the legal voters of the aforesaid township, held on the tenth day of November, 1868, under the provisions of said act." Upon each bond also appears the certificate of the State auditor, stating that it had been registered in his office, pursuant to the provisions of the act entitled "An Act to fund and provide for paying the railroad debts of counties, townships, cities, and towns," in force April 16, 1869.

The bill was filed in the year 1877, in the Circuit Court for Clay County, by the township of Harter and two of its resident taxpayers, — the latter suing in behalf of themselves and all other taxpayers of the township, — against the State treasurer and auditor, the county clerk and treasurer, the township collector, supervisor, and clerk, and two justices of the township; and also against the "unknown owners and holders" of such bonds with their coupons, who are alleged to be residents and citizens of States other than Illinois. It proceeded upon the ground that the bonds were issued without authority of law, and, consequently, were not binding upon the township. The prayer of the bill was that such a decree, with perpetual injunction, be rendered as would prevent the State, county, and town-

ship officers from taking any steps towards the assessment and collection of taxes to meet the bonds or any instalment of interest thereon; that the holders and owners of the bonds and coupons, their agents and attorneys, be required to bring the same into court for cancellation; and that the State and county treasurers be ordered to pay over to the township any money in their hands which had been raised by taxation for the payment of the bonds or their coupons. The officers who were sued, although duly served with process, made no defence. The unknown holders and owners of the bonds and coupons were proceeded against by publication in the manner authorized by the State law. A final decree was entered on the first day of May, 1879, giving relief to the full extent prayed for.

On the seventeenth day of April, 1880, Kernochan, the owner of all the bonds and coupons issued by the township, — having, it is conceded, acquired them before due, paying value therefor, and without notice of any defence except that appearing in the law and upon the face of the bonds themselves, — presented to the State court a petition stating that he had neither been summoned nor served with a copy of the bill, nor received any notice of the pendency of the suit. Upon that petition he based a motion to redocket the cause and open the decree, to the end that he might be heard touching the matters of such suit. His application was granted, and upon the same day he filed another petition, accompanied by a bond in the required form, asking the removal of the cause to the Circuit Court of the United States, upon the ground that the controversy was between citizens of different States, and that he was then, as well as at the commencement of the suit, a citizen of Massachusetts, while the complainants, during the same period, were citizens of Illinois.

The State court approved the bond and ordered the cause to be certified to the Federal court, with all the papers pertaining thereto.

In the Circuit Court the complainants entered a motion to remand the cause to the State court, which was overruled. Kernochan answered to the merits, and to that answer a general replication was filed. Upon final hearing, the injunction

granted by the State court was dissolved and the bill dismissed. The township appealed.

Preliminary to any consideration of the questions involving the validity of the bonds, as obligations of the township, it is proper that we should notice, briefly, some remarks made by counsel for the appellant, in reference as well to the proceedings in the State court after the appearance of Kernochan, as to the removal of the suit into the Federal court.

We perceive nothing irregular or erroneous in the action of the State court, whereby the cause was redocketed and the decree opened. By the statutes of the State, when a final decree is entered against a defendant who has not been summoned, or served with a copy of the bill, or received the notice required to be sent to him by mail, and such person, his heirs, devisees, executors, administrators, or other legal representatives, as the case may require, shall, within one year after notice in writing is given him of such decree, or, in the absence of such notice, within three years after such decree, appear in open court and petition to be heard touching the matters of such decree, and shall pay such costs as the court shall deem reasonable in that behalf, "the person so petitioning may appear and answer the complainant's bill; and thereupon such proceedings shall be had as if the defendants had appeared in due season and no decree had been made. And if it shall appear upon the hearing that such decree ought not to have been made against such defendant, the same may be set aside, altered, or amended, as shall appear just; otherwise, the same shall be ordered to stand confirmed against said defendant." Hurd's Stat. Ill., 1880, p. 189, sect. 19. Kernochan appeared within one year after the decree had been passed. He was, therefore, entitled, according to any reasonable construction of the statute, to be heard touching the matters of the decree, as if no decree had been made. When the order was made opening the decree, he acquired a position in which he could take any step that might have been taken had he appeared in due season in obedience to a summons. The court was at liberty to proceed as if no decree had been made against him. He could have demurred, pleaded, or answered, or, the suit being removable into the Circuit Court of the United States, have filed a

petition and bond as required by law in such cases. The contention of counsel for appellants is, in effect, that, until Kernochan answered the bill, the State court was without jurisdiction to proceed as if he had "appeared in due season and no decree had been made." But such a construction of the statute is too technical and is scarcely admissible where the party appearing, and who has been proceeded against by publication only, is a citizen of another State, entitled under the Constitution and laws of the United States to remove the cause from the State court. The utmost which could be claimed in such cases (and we do not say that such a claim could be sustained) is, that the State court might, in its discretion, decline to open the decree, or to hear the defendant, unless he presented an answer to the bill. In this case, the motion of Kernochan to redocket the cause and open the decree was granted, without requiring him to file an answer, disclosing his defence to the suit. We are not prepared to say that the State court erred in its ruling. We should, under the circumstances, assume that the State court correctly interpreted the local statute. If, therefore, the suit was removable, the Federal court, upon its removal, and, after the pleadings were made up, and proofs taken upon the issues made by Kernochan, had the power to set aside, alter, or amend the decree as might be just, or adjudge that it stand confirmed as entered in the State court. Upon his appearance in the State court the suit became, as to him, for all practical purposes, a new suit, to be conducted, however, subject to the authority of the court to confirm the former, instead of entering a new, decree.

We do not doubt that the suit was one which the defendant was entitled, under the act of March 3, 1875, c. 137, to remove from the State court. Disregarding, as we may do, the particular position, whether as complainants or defendants, assigned to the parties by the draughtsman of the bill, it is apparent that the sole matter in dispute is the liability of the township upon the bonds; that upon one side of that dispute are all of the State, county, and township officers and taxpayers, who are made parties, while upon the other is Kernochan, the owner of the bonds whose validity is questioned by this suit. He alone, of all the parties, is, in a legal sense, inter-

ested in the enforcement of liability upon the township. It is, therefore, a suit in which there is a single controversy, embracing the whole suit, between citizens of different States, one side of which is represented alone by Kernochan, a citizen of Massachusetts, and the other by citizens of Illinois. *Removal Cases*, 100 U. S. 457.

But it is contended that the petition of Kernochan, for the removal of the suit, was not filed within the time prescribed by the act, that is, at the term at which the cause could be first tried. The argument is, that Kernochan, although not advised, in any legal mode, of the pendency of the suit, was at liberty to appear therein before the decree was entered, and, consequently, that he did not seek its removal at or before the term at which the cause could have been first tried; that his appearance, and filing his petition praying to be heard touching the matters of the decree, have relation to the time when he *should* have appeared in court, *had* he been duly summoned. The bare statement of this proposition suggests its refutation. When the defendant would have been summoned had he been within the local jurisdiction of the State court, we are not informed; and, consequently, it is difficult to ascertain, upon the theory of appellant's counsel, when he should have appeared in court. It is sufficient to say, that the defendant, within the period fixed by the statute, appeared and secured the opening of the decree. The first term thereafter, at which the cause could properly have been tried, upon the merits, as to him, was the term at which, within the meaning of the act, he should have filed his petition for removal. And it was so filed.

We come now to the consideration of questions involving the merits of the cause.

We have seen that the bonds recite that they were issued in pursuance as well of the authority conferred by the act of Feb. 25, 1867, incorporating the Illinois Southeastern Railway Company, and the act of Feb. 24, 1869, amendatory thereof, as of an election of the legal voters of the township, held on the tenth day of November, 1868.

The first of those acts conferred authority upon townships to donate to the railway company any amount not exceeding

$30,000. That authority was not, however, to be exercised until after a proposition by the railroad company to the township, nor unless the donation was sanctioned by a majority of legal votes, cast at an election duly called and held to consider the question of donation, upon the terms proposed. It appears, from the record, that the company made to the township a proposition which contemplated a donation of $20,000, payable in three instalments, to be raised by a special tax, to be assessed and collected in 1869, 1870, and 1871; and which also bound the company to accept township bonds in lieu of the special tax, in the event legislation could be obtained giving authority to issue them. An election was held, on the day stated in the bonds, and the donation, upon the terms set forth in the company's proposition, was approved by a vote of three hundred, out of a total vote of three hundred and forty-two.

The fifth section of the amendatory act of Feb. 24, 1869, is in these words: —

"And whereas, certain townships in Wayne and Clay Counties have voted donations to said railway company, said townships are hereby authorized and empowered to issue township bonds for the amount so donated, without submitting the proposition again to be voted upon, — said bonds to be issued in sums not less than one hundred nor more than one thousand dollars each, with interest coupons attached, drawing interest at the rate of ten per cent per annum, payable semi-annually at the county treasurer's office, in each county where such townships are located, — said bonds to be payable in five years or any time thereafter, not exceeding twenty years, at the option of the townships; and said bonds to be signed by the supervisors thereof, or by the supervisor or supervisors of the district wherein such township is located, and to be countersigned by the township clerk of the respective townships; and said bonds to be delivered, properly executed, to the president of said railway company, when the conditions are complied with as contained in election notices and propositions submitted to and voted upon by the people of said townships; and said townships shall each, by its proper corporate authorities, provide, in due time, by a levy and a collection each year of a sufficient tax on its assessed property to pay the interest on its bonds, as it accrues half-yearly, as aforesaid, and ultimately to provide for the principal of said bonds at matur-

ity: *Provided*, that said bonds shall be placed in the hands of a trustee, on the demand of said railway company as hereinafter provided: *And, also, provided*, that such townships may determine, by a vote of their electors, at any regular or special town meeting or election, whether they will issue bonds or not in payment of the donations heretofore voted to said company." Private Laws Ill., vol. iii. p. 310.

In conformity with the provisions of that act, a special town meeting of the township was duly called and held on the twentieth day of May, 1870, at which the electors present voted unanimously in favor of an issue of bonds, in payment of the donation previously voted, rather than proceed with the levy and collection of a special tax, as contemplated by the original proposition of the company. A few days thereafter, to wit, May 27, 1870, as appears from the records of the town ship, the bonds, amounting to $20,000, were delivered by the township officers to the Springfield and Illinois Southeastern Railway Company, a corporation which had been formed on the 3d of December, 1869, in accordance with the laws of Illinois, by the consolidation of the Illinois Southeastern Railway Company with the Pana, Springfield, and Northwestern Railway Company. The bonds were transmitted by the township supervisor to the State auditor for registration, under the provisions of the funding act in force April 16, 1869. He certified, under oath, that they had been issued under the said acts of Feb. 25, 1867, and Feb. 24, 1869, and that all the preliminary conditions required, in the act of April 16, 1869, to be performed before such registration, and to entitle them to the benefits of that act, had been, to the best of his knowledge and belief, fully complied with. It may also be stated that taxes were annually levied, collected, and applied, by the township, in payments of interest on the bonds up to the commencement of this suit in 1877.

In view of these facts it is difficult to perceive upon what just ground the township can escape liability. In the first place, the bonds were issued in pursuance of a popular vote in favor of a donation to be met by a special tax, and also of a vote, at a subsequent special election, in favor of an issue of bonds in payment of that donation. In the next place, and as

conclusive against the township, the recitals in the bonds import a compliance with all of the provisions of the acts of assembly under which they were issued. It is true that the bonds do not, in express words, refer to the special election of May 20, 1870; but since the amendatory act authorized the township, upon a vote, at a regular or special town meeting or election, to issue bonds in payment of the donation previously voted, the recital in them fairly imports that such an election was, in fact, held before they were issued.

If those acts are not repugnant to the Constitution of the State, it results that, according to repeated adjudications of this court, the township is estopped, by the recitals in the bonds, to assert that their provisions were not complied with. The Constitution of Illinois, in force when these acts were passed, declared that the corporate authorities of counties, townships, school-districts, cities, towns, and villages may be vested with power to assess and collect taxes for corporate purposes. It is the settled law of the State, as heretofore recognized by this court, that this constitutional provision was intended to define the class of persons to whom the right of taxation might be granted, and the purposes for which it might be exercised; and that the legislature could not constitutionally confer that power upon any other than corporate authorities of counties, townships, school-districts, cities, towns, and villages, or for any other than corporate purposes. *County of Livingston* v. *Darlington*, 101 U. S. 411. Our attention is called to several cases in the Supreme Court of the State, in which it has been held that the legislature could not constitutionally require a municipal corporation, without its consent, to issue bonds or incur a debt for a merely corporate purpose. Some of those cases turn upon the inquiry as to who are, in the sense of the Constitution, corporate authorities of counties, cities, towns, &c., and what are corporate purposes. A leading case is *Williams* v. *Town of Roberts* (88 Ill. 11), where the court, speaking by Chief Justice Scholfield, said that under the system of township organization existing in Illinois, the electors alone represented the corporate authority of the town, and without their consent, expressed at town meetings or town elections, no

debt for a merely local corporate purpose could be imposed upon the township.

But neither that nor any other decision by the State court cited by counsel distinctly meets the precise point now before us, or would justify us in holding (as we ought not to do except in a clear case) that the General Assembly of the State had transcended its constitutional powers. The act of Feb. 27, 1867, did not assume to impose a debt upon the township without the consent of the electors. It expressly required an election to be held, at which the legal voters could determine the question of donation for themselves. The election was held, and a donation voted to aid in the construction of a railroad. That, it must be conceded, was a corporate purpose, within the meaning of the Constitution as interpreted by the State court. But it is contended that the amendatory act authorized the township officers, without the assent of the voters, to impose a burden or create a debt wholly different from that to which the voters, at the election on the 10th of November, 1868, gave their assent. Counsel overlook or fail to give proper force to the proviso in that act authorizing the electors at a regular or special town meeting to determine whether they would issue bonds in payment of the donation previously voted to the company. And there was, as we have seen, a special town meeting, duly called for the specific purpose of determining that question, and the decision was unanimous in favor of issuing bonds to pay off the donation.

It is urged, in this connection, that the Supreme Court of the State, in the recent case of *Schaeffer* v. *Bonham* (95 id. 378), decided in 1880, has ruled that the fifth section of the amendatory act of Feb. 24, 1869, was in violation of the Constitution of the State, and that it was the duty of this court to accept that decision as conclusive. That case in many respects resembles this one, but, upon the particular point arising here, it is materially different. It was submitted upon an agreed statement of facts, from which it appears that a certain township had, in 1868, voted a donation to the Illinois Southeastern Railway Company, to be raised by special tax, under the authority conferred in the act of Feb. 25, 1867. But it did not appear, from the evidence in that case, that an election had been held,

as authorized by the fifth section of the act of Feb. 24, 1869, to determine whether the donation should be paid by township bonds rather than by a special tax for a limited period. We infer from the agreed statement of facts in that case, as well as from the remarks of the court, that no opportunity was, in fact, given to the voters to determine the question of issuing bonds. The court said that the charter authorizing townships to vote donations did not contemplate, and, consequently, did not provide, for issuing bonds; that it only intended a donation to be paid by the levy of a tax, and the payment of the money, when thus collected, to the railroad company; that the legislature could not confer upon the township officers, without a vote of the people, authority to make such a radical change in the proposition upon which the people voted, as would occur, if, instead of a special tax, during a limited period, to meet the donation, township interest-bearing bonds should be issued, running from five to twenty years.

The State court, in referring to the fifth section of the act of Feb. 24, 1869, states that it "authorizes and empowers townships in Wayne and Clay Counties, that had voted donations to the road, *without submitting the question to a vote*, to issue bonds," &c. We are unable to concur in that construction of the act, since that section, after authorizing townships in Wayne and Clay Counties, which had voted donations to the railway company, "to issue township bonds for the amount so donated, without submitting *the proposition* [for a *donation*] *again* to be voted upon," expressly declares that "such townships may determine by a vote of their electors, at any regular or special town meeting or election, whether they will issue bonds or not in payment of the donations heretofore voted to said company." The purpose of the fifth section was to dispense, as to certain townships, with a second vote upon the general question of donation, and to confer authority to issue township bonds in payment of such donation, when, and only when, the electors so voted at a regular or special town meeting or election. In *Schaeffer* v. *Bonham* it did not appear that the voters were consulted as to whether bonds should be substituted in lieu of the special tax previously voted. The parties there sought the opinion of the court upon an agreed statement of

facts, which, in effect, conceded that no such election was held. Here it is shown that the bonds in suit were issued in pursuance of the vote of the electors at a special town meeting called to determine the question whether the donation previously voted should be paid in that mode. It is clear that *Schaeffer* v. *Bonham* proceeds upon the ground, in part, that the bonds there in suit were issued in payment of the donation, without any submission of the question to the voters.

In another portion of its opinion, after stating that the assessment of taxes to pay off the donation was the imposition of a debt upon the township, the State court said: "Had the township voted to incur a debt, and the bonds had been issued by a person named by the General Assembly, different from the corporate authorities, then payment of interest and acquiescence for such a length of time might have operated as an estoppel. In such a case, the vote to create the debt, if authorized by law and had in pursuance of law, would have been the essential act to create the debt, and the mere signing and delivering the evidence of the debt would have been valid if done by a person specified by the General Assembly, whether named before or after the vote was had. But such is not the case here. No debt was voted, and the legislature was powerless to authorize any but the corporate authorities to create a debt." p. 381. If, as held by the State court, the issuing of bonds, in payment of the donation previously voted, was incurring a debt, and if such a debt could not be incurred without a direct vote of the electors, it is sufficient to say that such a vote was had in reference to the bonds here in suit.

For the reasons stated we are of opinion that the acts of Feb. 25, 1867, and Feb. 24, 1869, are not in violation of the Constitution of the State; and in so holding we do not, we think, come in conflict with any decision of the State court in which the precise question here presented has been passed upon.

It remains for us to consider whether the township can avoid liability upon the bonds by reason of the fact that they were delivered to the Springfield and Illinois Southeastern Railway Company, the donation having been originally voted to the Illinois Southeastern Railway Company.

We are of opinion that there is nothing of substance in this objection. The act incorporating the Illinois Southeastern Railway Company, the act amendatory thereof, and the act in relation to the Pana, Springfield, and Northwestern Railway Company (even if the general statutes of the State were not sufficient for the purpose), fully authorized the consolidation between those two companies, and upon such consolidation the new company succeeded to all the rights, franchises, and powers of the constituent companies. The power in the township to make a donation to aid in the construction of the Illinois Southeastern railway was also a privilege of the latter corporation, and that privilege, upon the consolidation, passed to the new company. The donation was voted before the consolidation took effect, and since the consolidated or new company did not propose to apply such donation to purposes materially different from those for which the people voted it in 1868, its right to receive the donation, at least when the township assented, cannot be doubted. The records of the township show that the bonds were directed to be issued and delivered to the new company, and it will not, under the circumstances, be allowed to say, as against a *bona fide* purchaser for value, that the bonds are invalid. There is, consequently, no pretext for saying that a burden was imposed upon the people to which they had never given their consent in the mode prescribed by law.

Other questions are discussed, but we do not deem it necessary to refer to them.

Decree affirmed.

ASHBURNER v. CALIFORNIA.

The statute of California, approved April 15, 1880, limiting to four years the terms of office of the commissioners required by the act of Congress of June 30, 1864, c. 184 (13 Stat. 325), "to be appointed by the executive of California," to manage the Yosemite Valley and Mariposa Big Tree Grove, is not repugnant to that act, and may be followed by him in making his appointments

ERROR to the Supreme Court of the State of California.

This is an action in the nature of a writ of *quo warranto* instituted by the State of California in the Superior Court for Sacramento County to determine the right of Ashburner to hold the office of member of the board of commissioners to "manage the Yosemite Valley and Mariposa Big Tree Grove." The complaint charges that he, on May 1, 1880, usurped the office and has since unlawfully withheld the same and wrongfully continued to discharge the duties thereof. This allegation the defendant denies.

The case was submitted to the court upon an agreed statement of facts, from which it appears that in pursuance of the act of Congress, entitled "An Act authorizing a grant to the State of California of the Yosemite Valley, and the land embracing the Mariposa Big Tree Grove," approved June 30, 1864, and an act of the legislature of California, entitled "An Act to accept the grant by the United States government to the State of California of the Yosemite Valley and Big Tree Grove, and to organize the board of commissioners, and to fully empower them to carry out the objects of the grant, and fulfil the purposes of the trust," approved April 2, 1866, the governor of the State appointed the defendant one of the commissioners provided for in said acts; and that at the time of the passage of the act of the legislature, entitled "An Act to provide for the management of the Yosemite Valley and the Mariposa Big Tree Grove," approved April 15, 1880, he was acting as such commissioner; that on April 19, 1880, after the adoption of "Senate concurrent resolution No. 20, relating to appointment of eight commissioners to manage the Yosemite Valley and the Mariposa Big Tree Grove," adopted Feb. 17, 1880, and the passage of the act of April 15, 1880, the governor, in pursuance

of said concurrent resolution and said act, and by virtue of the authority thereby conferred upon him, appointed certain persons, of whom the defendant was not one, to be such commissioners, and each of them accepted the appointment, took, subscribed, and filed an oath of office in the manner and form prescribed by law for the officers of the government of the State; that more than four years had elapsed after the appointment of the defendant and before the passage of the act of April 15, 1880; that the defendant was not reappointed as such commissioner; that each of the commissioners appointed April 19, 1880, and the board by them composed, duly demanded of the defendant that he surrender the office and cease to discharge the duties thereof; but that he refused and still refuses to comply with the demand, it having been made after the qualification of the commissioners and before the commencement of this action; that the defendant has, ever since the passage of the act of April 15, 1880, continued to discharge the duties of commissioner, and has during all that time claimed, and still claims, that he is by law entitled to be a commissioner, and a member of the board as organized and existing at the time of the passage of that act, and to exercise and discharge all the powers, authority, and duties of commissioner, and of a member of the board, — he claiming and insisting that the board and the members thereof continue to be and are such board, notwithstanding the passage of that act and the appointments made by the governor April 19, 1880.

The provisions of the act of June 30, 1864, c. 184 (13 Stat. 325), are set forth in the opinion of the court.

Sects. 1 and 5 of the statute of California approved April 15, 1880, are as follows: —

"SECT. 1. The governor of the State of California, and the eight other commissioners appointed by him in accordance with the act of Congress, entitled 'An Act authorizing a grant to the State of California of the Yosemite Valley and the Mariposa Big Tree Grove,' approved June thirteenth, eighteen hundred and sixty-four, shall constitute a board to manage such premises, and the governor shall be *ex-officio* member of the commission and president of the board. The term of office of the commissioners shall be four years: *Provided*, that the eight first appointed shall so classify themselves, that

four shall go out of office in two years, and four in four years; and thereafter the appointments shall be made four each two years. Vacancies occurring in said commission from death, resignation, or other causes, shall be filed by appointment, by the governor, to serve for the unexpired term only."

"SECT. 5. The said commission shall, immediately after organizing, demand from the commissioners now acting, all the books, papers, and documents of any and every kind, pertaining to the business of the board, and it shall be the duty of the commissioners now acting to immediately comply with said demand."

The Superior Court rendered judgment in favor of the defendant, and that judgment having been reversed by the Supreme Court of the State, Ashburner sued out this writ of error.

Mr. Alfred Barstow for the plaintiff in error.
Mr. John H. McCune and *Mr. A. P. Catlin, contra.*

MR. CHIEF JUSTICE WAITE delivered the opinion of the court.

By the act of June 30, 1864, c. 184, the United States granted to the State of California the Yosemite Valley and the Mariposa Big Tree Grove, "with the stipulation, nevertheless, that the State shall accept this grant upon the express condition that the premises shall be held for public use, resort, and recreation, and shall be inalienable for all time; . . . the premises to be managed by the governor of the State and eight other commissioners, to be appointed by the executive of California, who shall receive no compensation for their services." 13 Stat. 325. In 1866 the State of California, by an act of the legislature, accepted this grant "upon the conditions, reservations, and stipulations contained in the act of Congress." There cannot be a doubt that, in this way, these interesting localities were, by the joint act of the United States and California, devoted to a special public use. The title was transferred to California for the benefit of the public as a place of resort and recreation. Without the consent of Congress the property can never be put to any other use, and the State cannot part with the ownership. It may be called a trust, but only in the sense that all public property held by public corporations for public uses is a trust.

It must be kept for the use to which it was by the terms of the grant appropriated. If it shall ever be in any respect diverted from this use the United States may be called on to determine whether proceedings shall be instituted in some appropriate form to enforce the performance of the conditions contained in the act of Congress, or to vacate the grant. So long as the State keeps the property, it must abide by the stipulation, on the faith of which the transfer of title was made.

The management of the property was intrusted by the United States to the governor of the State and eight other commissioners, to be appointed by him. This is one of the conditions contained in the act of Congress to which the State gave its assent when it accepted the grant. The State cannot commit the management to any other board than this, neither can it control his discretion in making the appointments; but we see no reason why the State may not set a reasonable limitation on the time a commissioner shall hold his place when appointed. This would be really nothing more than directing that the governor revise his appointments at stated periods. He will be left free to select whom he pleases, and by reappointments to continue old incumbents in their places if so inclined. His discretion in this respect would be in no manner interfered with. This, in our opinion, is all that was done by the act of April 15, 1880. The term of the office of a commissioner was fixed at four years; but the power of appointment was left exclusively with the governor, in whom, under the Constitution, is vested the supreme executive power of the State. The length of the term is that prescribed by the Constitution for State offices, and is certainly not unreasonable.

That Congress expected the State would, by appropriate legislation, aid the commissioners in the performance of their duties, and prescribe reasonable rules and regulations, not inconsistent with the general purposes of the grant, for their government in the administration of the trust, is abundantly shown by the fact that the acceptance of the grant was considered sufficient, notwithstanding the act of the legislature by which it was done contained various provisions of such a character. Among other things, it was enacted that the commission-

ers should be known in law as "The Commissioners to manage the Yosemite Valley and the Mariposa Big Tree Grove," and by that name they and their successors might sue and be sued; that they should have power to make and adopt all rules, regulations, and by-laws for their own government and the government, improvement, and preservation of the property, not inconsistent with the Constitution of the United States or of California, or with the act making the grant, or any law of Congress or the legislature; that they should hold their first meeting at such time and place as should be designated by the governor; that a majority should constitute a quorum for the transaction of business; that they should appoint a president and secretary as well as a guardian of the property, and that they should report through the governor to the legislature at every regular session. All this was consistent with the conditions and reservations of the grant, and evidently in aid of what Congress intended should be done. So, too, in our opinion, is the act of 1880. If, as is contended here, and was held by the dissenting judge below, when the commissioners were once appointed the power of the governor over appointments was exhausted, until a vacancy occurred by death or resignation, and neither he nor the legislature could remove a commissioner for cause or otherwise, it is easy to see that unless some provision was made to guard against the accidents of disabilities incident to a life tenure of office, great embarrassments might arise in the management of this important property. It is entirely unnecessary to decide whether these commissioners are State officers or State commissioners within the meaning of those terms as used in the constitutions of the State adopted in 1848 and 1879, and, therefore, within the constitutional provision limiting the terms of such offices; but we are of the opinion, and decide, that a law of the State which limits the term of office of a commissioner under one appointment to a reasonable time is not repugnant to the act of Congress, and may be followed by the governor in making his appointments. The plaintiff in error had been in office longer than the limited period, when the governor, in the exercise of his discretion, appointed another person in his place. Upon this appointment he should have surrendered his office. It follows that the judgment of the court below was right.

Judgment affirmed.

139-491
41-584

JARROLT v. MOBERLY.

1. The act of the General Assembly of Missouri, approved March 18, 1871, which provides that "it shall be lawful for the council of any city, or the trustees of any incorporated town, to purchase lands, and to donate, lease, or sell the same to any railroad company upon such terms and conditions as such board may deem proper, and for the purposes of assisting and inducing such railroad company to locate and build machine-shops or other improvements upon such lands, and, for such purposes, to levy taxes upon the taxable property of such city or town, and to borrow money and to issue the bonds of such city or town for such purposes: *Provided*, a majority of the qualified voters of such town or city, at a special election to be held therein, shall assent to such purchase and donation," is void, it being in conflict with sect. 14 of art. 11 of the Constitution adopted in 1865, which declares that "the General Assembly shall not authorize any county, city, or town to become a stockholder in, or to loan its credit to, any company, association, or corporation, unless two-thirds of the qualified voters of such county, city, or town, at a regular or special election to be held therein, shall assent thereto."
2. The provision which prohibits the creation of an indebtedness by a direct loan of municipal credit does not permit the indirect use of such credit for the same purpose.
3. The act of Feb. 16, 1872, forbidding, under certain penalties therein prescribed, the officers of a municipality in its behalf to loan the credit thereof, or donate to or subscribe stock in any railroad or other company, without the previous assent of two-thirds of the qualified voters, is merely prohibitory in its character, and confers no authority on those officers when such assent was given.
4. *Held*, therefore, that the bonds of the "municipal corporation of the inhabitants of the town of Moberly," in the county of Randolph, in the State of Missouri, dated May 1, 1872, and reciting that they are "issued in pursuance of an election held in said town on the twenty-sixth day of March, A. D. 1872, to decide whether said town should purchase and donate to the St. Louis, Kansas City, and Northern Railway Company two hundred acres of land for machine-shop purposes, the result of said election being two hundred and twenty-eight votes for the purchase and donation and one vote against the purchase and donation; and, in pursuance to orders of the board of trustees of the inhabitants of the town of Moberly, made on the eighteenth day of April, A. D. 1872, which orders were made in accordance with an act of the General Assembly of the State of Missouri, entitled 'An Act to authorize cities and towns to purchase lands, and to donate, lease, or sell the same to railroad companies,' approved March 18, A. D. 1870," are void.

ERROR to the Circuit Court of the United States for the Western District of Missouri.

The plaintiff is a citizen of the State of Illinois. The de-

fendant is the city of Moberly, a municipal corporation of the State of Missouri. This action was brought to recover judgment upon several interest coupons, originally annexed to, but now detached from, bonds issued by the city for the purchase of lands, consisting of two hundred acres, to be donated to the St. Louis, Kansas City, and Northern Railway Company, for "machine-shop purposes." The petition — which is the designation given to the first pleading in the action — avers that on the 1st of May, 1872, the city issued fifty bonds, similar in form, differing only in their numbers, each for $500, to each of which twenty coupons were attached, each for the sum of $25, payable on the first day of November and of May of each year, and numbered from one to twenty; and it sets forth a copy of one of the bonds and coupons, as follows: —

"*Moberly Machine-shop Bonds.*

"No. .] UNITED STATES OF AMERICA. [$500.

"Know all men by these presents, that the 'municipal corporation of the inhabitants of the town of Moberly,' in the county of Randolph, in the State of Missouri, acknowledges itself indebted and firmly bound to W. F. Burrows or bearer in the sum of five hundred dollars, in current funds, which sum the said inhabitants of the town of Moberly hereby promise to pay to the said W. F. Burrows or bearer, at the Bank of America, in the city of New York, ten years after the date of this bond, together with interest thereon from date at the rate of ten per cent per annum, which interest shall be paid semi-annually, in current funds, on the presentation and surrender at said bank of the annexed coupons as they severally become due and payable, but this bond is payable at the option of the said inhabitants of the town of Moberly at any time after three years from the date hereof, and is payable only by a special tax on all the real estate and personal property lying and being within the corporate limits of said town.

"This bond is issued in pursuance of an election held in said town on the 26th day of March, A. D. 1872, to decide whether said town should purchase and donate to the St. Louis, Kansas City, and Northern Railway Company two hundred acres of land for machine-shop purposes, the result of said election being two hundred and twenty-eight votes for the purchase and donation,

and one vote against the purchase and donation; and in pursuance to orders of the board of trustees of the inhabitants of the town of Moberly, made on the eighteenth day of April, A. D. 1872, which orders were made in accordance with an act of the General Assembly of the State of Missouri, entitled 'An Act to authorize cities and towns to purchase lands and to donate, lease, or sell the same to railroad companies,' approved March 18th, A. D. 1871.

"In witness whereof, the said inhabitants of the town of Moberly have executed this bond, by the chairman of the board of trustees of said town signing his name thereto, and by the clerk of said board of trustees, by order of said board, attesting the same and affixing thereto his signature and the seal of said corporation, in the town of Moberly, county of Randolph, State of Missouri, on the first day of May, 1872.

"J. B. FREEMAN,
"*Chairman of the Board of Trustees of the Inhabitants of the Town of Moberly.*

"ATTEST:
[SEAL.] "J. W. DORSEY, *Clerk.*

"*Coupon No.* 1.

"$25.] MOBERLY, RANDOLPH COUNTY, MISSOURI. [$25.

"The municipal corporation of the inhabitants of the town of Moberly will pay the bearer, at the Bank of America, in the city of New York, twenty-five dollars, on the first day of May, 1872, being six months' interest on bond No. , for $500.00.

"J. W. DORSEY, *Clerk.*"

The petition also avers that the plaintiff is the holder of coupons amounting to $4,200, originally annexed to these bonds, but now detached from them, which are due and unpaid, for which sum he asks judgment. To the petition the defendant demurred, on the ground, among other things, that the act of the legislature under which the bonds were issued is in conflict with the Constitution of the State, and that the petition does not state facts sufficient to constitute a cause of action. The court sustained the demurrer, and the plaintiff electing to stand upon his petition, final judgment was entered thereon for the defendant.

The judges, however, were divided in opinion upon the questions raised by the demurrer, and, in accordance with the

statute, have certified, for the decision of this court, the following points upon which they differed, namely: —

First, Whether the act of March 18, 1870, entitled "An Act to authorize cities and towns to purchase lands, and donate, lease, or sell the same to railroad companies," recited in the bonds, is in conflict with sect. 14 of art. 11 of the Constitution of Missouri.

Second, Whether the petition states a valid and sufficient cause of action.

The act of March 18, 1870, under which the bonds were issued, declares that "it shall be lawful for the council of any city, or the trustees of any incorporated town, to purchase lands, and to donate, lease, or sell the same to any railroad company, upon such terms and conditions as such board may deem proper, and for the purposes of assisting and inducing such railroad company to locate and build machine-shops or other improvements upon such lands; and for such purposes to levy taxes upon the taxable property of such city or town, and to borrow money and to issue the bonds of such city or town for such purposes: *Provided*, a majority of the qualified voters of such town or city, at a special election to be held therein, shall assent to such purchase and donation."

Sect. 14 of art. 11 of the Constitution of Missouri of 1865, with which it was contended the act conflicted, declares that "the General Assembly shall not authorize any county, city, or town to become a stockholder in, or to loan its credit to, any company, association, or corporation, unless two-thirds of the qualified voters of such county, city, or town, at a regular or special election to be held therein, shall assent thereto."

To meet the objections to the alleged invalidity of the bonds, the plaintiff cited the act of the legislature of Feb. 16, 1872, entitled "An Act to protect counties, cities, and incorporated towns from combinations between railroad companies, county courts, city councils of cities, and boards of trustees of incorporated towns," the first section of which declares that "no county court of any county, city council of any city, nor any board of trustees of any incorporated town, shall hereafter have the right to donate, take, or subscribe stock for such county,

city, or incorporated town, in, or loan the credit thereof to, any railroad company, or other company, corporation, or association unless authorized to do so by a vote of two-thirds of the qualified voters of such county, city, or incorporated town. And any justice of a county court, member of a city council, or member of a board of trustees of any incorporated town, who shall hereafter vote to donate, take, or subscribe stock for such county, city, or incorporated town, in, or loan the credit thereof to, any railroad company, or other company, corporation, or association, unless authorized to do so by a vote of two-thirds of the qualified voters of such county, city, or incorporated town, shall be adjudged guilty of a felony, and on conviction thereof shall be punished by imprisonment in the penitentiary for not less than two years."

Other sections repeal all acts or parts of acts inconsistent with it. The act took effect on its passage. On the 29th of March, 1872, the legislature passed another act, in terms amending the first section of the act of March 18, 1870, so as to read as follows: —

"It shall be lawful for the council of any city, or the trustees of any incorporated town, to purchase land, and to donate, lease, or sell the same to any railroad company, and to contract, for a period of time not exceeding twenty years, with such railroad company, for the payment of all or any part of the taxes which may at any time be levied by the authorities of such town or city, and for such town or city purposes only, upon property of such railroad company, and upon such terms and conditions as such board of said city or town may deem proper, for the purpose of assisting and inducing said railroad company to locate and build machine, work, or other shops, or other improvements, upon such land for the purpose of such purchase, to levy taxes upon the taxable property of such city or town, and to borrow money and issue the bonds of such city or town for such purpose: *Provided*, that two-thirds of the qualified voters of such town or city, at a regular or special election to be held therein, shall assent to such purchase or donation."

This act took effect on its passage.

Mr. John D. Stevenson for the plaintiff in error.

Mr. J. H. Overall, contra.

MR. JUSTICE FIELD, after stating the case, delivered the opinion of the court.

The object of the inhibition in the State Constitution was to prevent the creation of debts by counties, cities, and towns on behalf of any company, association, or corporation without the assent of two-thirds of their qualified voters. The loan of their credit, that is, the placing of their obligations for the payment of money for the use of companies, was the usual mode in which they incurred indebtedness. Aid in this way to companies, particularly such as were organized for the construction of railroads, was given so frequently by municipal bodies in Missouri, before the Constitution of 1865 went into effect, as in many instances to greatly embarrass and subject them to burdensome and oppressive taxation to provide for the interest on their obligations and the ultimate payment of the principal.

Numerous acts of the legislature had authorized officers of counties and cities to subscribe for stock in railway companies, and to issue bonds for their aid without limit as to amount and without the previous assent of those who were to be taxed for their payment. In many instances the road, in aid of which the bonds were issued, was never constructed, and as no benefit resulted to the counties and cities, their inhabitants naturally felt impatient under the burdens which their officers had improvidently imposed.

It was the purpose of the constitutional provision to check these abuses, by requiring the previous assent of two-thirds of the qualified voters of the municipal bodies before any more stock should be subscribed by them or any further indebtedness be thus incurred. The issue of obligations directly to the company, association, or corporation, without such previous assent, is within the letter of the prohibition, and to purchase property to be given to such company, association, or corporation by the issue of obligations to others, without such assent, is within its spirit. Both modes of using the bonds of the municipality are equally a use of its credit, the difference being that the one is a direct and the other an indirect way of employing the credit of the municipality for the benefit of the railway company. It would be a narrow and strict construction of the constitutional provision to hold that it prohibited the creation

of indebtedness by a municipality by a direct use of its credit for the railway company, and yet permitted such creation by the indirect use of it for the same purpose. A constitutional provision should not be construed so as to defeat its evident purpose, but rather so as to give it effective operation and suppress the mischief at which it was aimed. In accordance with this principle, this court held in *Harshman* v. *Bates County* that the inhibition in question extended to townships in Missouri as well as to counties, cities, and towns, although townships were not mentioned. To contend, said the court, that the mere subdivision of counties into townships enabled the legislature to evade the constitutional provision is to ignore the manifest intention and spirit of that instrument; that it could not be possible that it was intended to restrict the legislature as to counties and not to restrict it as to mere sectional portions of the counties. 92 U. S. 569.

Considering the provision in this spirit, and looking at the evil to be prevented, we are of opinion that the issue by the defendant of its bonds to purchase lands, to be donated to the railway here, was a loan of its credit which could not be made without the assent of two-thirds of the qualified voters of the city. It is true that a loan implies a return of the thing loaned at some future day. A loan of credit would, therefore, seem to require that the party receiving its benefit should provide for its cancellation by the payment of the bonds issued. This being so, it would be unreasonable to hold that, whilst the framers of the Constitution intended to prohibit a temporary use of the credit of a municipality without the previous assent of two-thirds of its qualified voters, they were willing that the absolute grant of the credit should be made without such assent. We do not think that a construction leading to such a conclusion is permissible. The act of March 18, 1870, must, therefore, be held to be in conflict with the Constitution of the State. It authorizes a majority of the voters of a municipality to do that which the Constitution declares the legislature shall not authorize to be done except by the assent of two-thirds of such voters.

The Supreme Court of Missouri has given a similar construction to the constitutional provision. An act of the legislature

had, among other things, provided for the establishment of a school of mines and metallurgy as a branch of the university of the State, which was to be located in such county having mines as should donate to the board of curators of the university, for buildings and other purposes of the school, the greatest available amount of money and bonds. The act authorized the county court, of a county desirous of making a donation, to issue bonds of the latter to be delivered to the board of curators and to be by them sold, and the proceeds used in the purchase of the land and the erection of the necessary buildings. Under this act, the County Court of Phelps County ordered the issue of bonds, at different times, amounting in all to $75,000, to be used as mentioned, and their delivery to the curators. The order was made without the assent of two-thirds of the qualified voters of the county, and, upon the petition of the State, the sale of the bonds was enjoined, the court holding that their issue was a loan of credit within the constitutional inhibition, and that the act authorizing their issue, without the sanction of two-thirds of the voters of the county, was void. It stated that the object of the inhibition upon county courts and city and town municipalities was to prevent them from taxing the people without their assent. 57 Mo. 178.

The difference between that case and the one at bar is only in the mode of effecting the same result. There the bonds were given to the curators to be by them sold and the proceeds invested in the establishment of the school of mines. Here the bonds were to be sold by the municipality issuing them, and the proceeds used by it in the purchase of lands to be donated to the railroad company. The object of the loan in both cases, in authorizing the issue of the bonds, was the purchase of property and the donation of it to corporations. As remarked by counsel, it is difficult to see how the fundamental law of the State could be evaded by a change of the parties through whom the credit of the municipality is to be converted into money. In either case the debt created is to be paid by taxation.

The subsequent case of the County Court of St Louis County against Griswold does not change this decision. The bonds there considered were issued to purchase lands in St. Louis for

a public park for the benefit of its inhabitants. There was no loan of credit for the use of any other parties in the case. 58 id. 175.

The act of the legislature of Feb. 16, 1872, upon which much reliance is placed by counsel for the plaintiff, is merely prohibitory in its character, forbidding the officers of counties, cities, and towns to donate, take, or subscribe stock in any railroad or other company, corporation, or association, or the loan of their credit, without the previous assent of two-thirds of their qualified voters, and prescribing a punishment for a disregard of its provisions. It confers, of itself, no authority. The inhibition upon the officers of a county, city, or town to loan its credit without the previous assent of others, was not an authority to loan it when such assent was given. Authority to create an indebtedness against a municipality, except on certain conditions, was not conferred, because the attempt thus to create it was made punishable as a crime. Further legislation was needed. Such was the evident opinion of the legislature of the State, for, by an additional act, passed on the 29th of March, 1872, the authority was given in terms.

We answer, therefore, the first question certified to us in the affirmative, and the second in the negative.

Judgment affirmed.

MR. JUSTICE HARLAN dissenting.

The recitals in the bonds show that an election was held, in the town of Moberly, three days before the passage of the act of March 29, 1872, to decide whether that town should purchase and donate to the St. Louis, Kansas City, and Northern Railway Company, two hundred acres of land for machine-shop purposes; that two hundred and twenty-eight votes were cast in favor of, and only one against, such donation and purchase; that the bonds in question were issued in pursuance of that election and of the orders of the board of trustees of the town, made on the eighteenth day of April, 1872; and that such orders were made in accordance with the aforesaid act of March 18, 1870.

The circuit judge conceded it to be the settled law of Missouri that municipal aid could be given to railroad companies

without infringing the Constitution of the State; and that if machine-shops constituted an integral or essential part of a railroad, or were necessary for its convenient use or operation, then the act of March 18, 1870, was not obnoxious to the principles announced in *Loan Association* v. *Topeka*, 20 Wall. 655. But he was of opinion that the issuing of the bonds in suit to be used in the purchase and donation of lands to a railroad company for machine-shop purposes was a "loan of credit," upon the part of the town, within the meaning of the State Constitution; and that, consequently, the act of March 18, 1870, was unconstitutional, in that it permitted an issue of bonds, for such purposes, upon the assent only of a majority of the qualified voters of the municipality.

In the view which I take of this case, it is not necessary to decide whether this transaction was, or not, a loan of credit. For, assuming that it was, the petition must be regarded as stating a valid and sufficient cause of action against the defendant, if, at the time of the election, held on the 26th of March, 1870, the act of March 17, 1870, had become so modified by subsequent legislation, as to require the assent of two-thirds of the qualified voters of the town as a condition precedent to any issue of bonds to be applied in the purchase of lands to be donated to the railroad company for machine-shop purposes. And such, I think, was the legal effect of the act of Feb. 16, 1872. The first clause of its first section declares, that "no county court of any county, city council of any city, nor any board of trustees of any incorporated town, shall hereafter have the right to donate, take, or subscribe stock for such county, city, or incorporated town, in, or loan the credit thereof to, any railroad company . . . unless authorized to do so by a vote of two-thirds of the qualified voters of such county, city, or incorporated town." The General Assembly, of course, knew when they passed the law of Feb. 16, 1872, that the previous statute of March 18, 1870, had assumed to authorize counties, cities, and towns to make donations to railroad companies, for machine-shop purposes, upon a bare majority vote of the qualified electors. The prohibition against donations thereafter, except with the sanction of two-thirds of the qualified voters, was, in view of former legislation, equivalent to an affirmative recogni-

tion of power thereafter to make such donations in pursuance of the provisions of the act of Feb. 16, 1872. That act imported into the act of March 18, 1870, the requirement of a two-thirds affirmative vote as a condition precedent to any donation of land for machine-shop purposes. The express repeal, by the act of Feb. 16, 1872, of all parts of laws inconsistent therewith, evinces a purpose, upon the part of the General Assembly, to do something more than declare a violation of that act, by any of the officers therein named, to be a felony. Nor was it intended to withdraw from counties, cities, and towns authority, under any circumstances, to make such donations. Manifestly there was also a purpose to provide against the possibility of donations or loans of credit, under any existing statute, except with the express sanction of two-thirds of the qualified voters of the municipality. The only difficulty in the way of this conclusion arises from the negative character of the language of the first clause of the act of Feb. 16, 1872. But that difficulty seems to be removed by the fact that a previous statute having assumed to confer upon counties, cities, and towns the power to make donations to railroad companies for machine-shop purposes, the object of the act of Feb. 16, 1872, was thereafter to require the previous assent of two-thirds of the electors, and to repeal all acts or parts of acts inconsistent with that requirement. The bonds, upon their face, show the assent of all the electors voting except one. Had these bonds recited, in terms, that they were issued in pursuance of the act of March 18, 1870, as modified by subsequent legislation, there would have been no ground upon which to question the authority to issue them.

But the rights of the purchaser of the bonds should not be sacrificed because the reference to the statute, by authority of which they were issued, was not full or technically accurate. When the election was held, the statute of March 18, 1870, as modified by that of Feb. 16, 1872, authorized an issue of bonds for the purchase of lands to be donated for machine-shop purposes, two-thirds of the qualified voters of the town assenting thereto. The provisions of that statute, as thus modified, seem to have been complied with.

I am of opinion that the act of March 29, 1872, passed after

the election of March 26, 1870, was only cumulative legislation, so far as it related to subjects embraced in the act of March 17, 1870, as modified by the act of Feb. 16, 1872. I think that the act of March 17, 1870, as modified by the act of Feb. 16, 1872, was constitutional, and that the petition states a good cause of action against the defendant, even if the issue, by the town, of bonds for the purposes indicated, was a loan of credit, within the meaning of the State Constitution.

For these reasons I feel obliged to dissent from the opinion and judgment.

ADAM v. NORRIS.

1. A patent issued upon a confirmed Mexican grant is in the nature of a conveyance by way of quitclaim. It is conclusive only as between the parties thereto, and is evidence that, as against the United States, the validity of the grant has been established. *Miller* v. *Dale* (92 U. S. 473) cited and approved.
2. Where a survey and a patent thereon are founded upon a superior Mexican grant, the rights of a party thereunder are not concluded by a prior survey to other claimants.
3. A patent issued upon a survey of a grant was returned by the grantee to the Commissioner of the General Land-Office, who ordered another survey. *Held*, that the patent issued upon the last survey is not rendered invalid because, in addition to lands not covered by the prior patent, it purports to convey those which were so covered.
4. A pleading which would be cured by verdict, is good after a finding by the court to which the trial of the issue was submitted by the stipulation of the parties.

ERROR to the Circuit Court of the United States for the District of California.

The facts are stated in the opinion of the court.

Mr. S. F. Leib for the plaintiffs in error.

Mr. Benjamin S. Brooks and *Mr. James K. Redington*, *contra*.

MR. JUSTICE MILLER delivered the opinion of the court.

This was an action to recover possession of land, brought by Adam and Schuman in the District Court of the State of

California for the County of Santa Barbara, but removed on the petition of Norris and the other defendants into the Circuit Court of the United States for the District of California, where, by agreement of the parties, it was tried without a jury. The court made a finding setting forth all the facts on which the title of each party rests. There was a judgment for the defendants. Adam and Schuman sued out this writ.

The case is one dependent strictly on the legal title. Each party is supported by a patent from the United States issued upon a confirmed Mexican grant, and by a survey approved by the General Land-Office. Each patent includes the land in controversy. The explanation of this is, that while the grants were in the main for different tracts of land, they interfere and overlap when the lines of each are clearly ascertained.

The defendants hold under a grant of the Rancho Guadalupe from the Mexican government, dated March 21, 1840, to Teodoro Arrellanes and Diego Olivera, a decree of the District Court of the United States for California confirming that claim May 12, 1857, and a patent from the United States, dated March 1, 1870.

The plaintiffs assert title under a grant of that government of the Rancho La Punta de la Laguna, dated Dec. 29, 1844, to Louis Arrellanes and Eusides Miguel Ortega, which was confirmed by the District Court May 2, 1854, and a patent issued thereon Oct. 2, 1873.

If this were all, it would seem clear that the defendants, being in possession of the land under the older patent from the United States, and the older grant from the government of Mexico, the judgment of the Circuit Court should be affirmed. To this view the plaintiffs assign several objections as errors, some of which we will notice.

1. The survey on which the plaintiffs' patent was issued having been approved by the surveyor-general Jan. 29, 1861, and publication of it, under the act of June 14, 1860, duly made in February and March, 1861, the plaintiffs insist that as no objection was made to it, it became final and conclusive at that time, while that on which defendants' patent was issued was approved by the surveyor-general in June, 1867.

The act of Congress of June 14, 1860, c. 128 (12 Stat. 33),

required the surveyor-general, whenever a survey of a confirmed Mexican grant had been approved by him, to make a publication of the survey for a prescribed time, which should be held to be notice to everybody of what it included. Any one desiring to contest the correctness of this survey could, on a proper application, have it removed or filed in the District Court of the United States, where the objection to it should be heard and determined, and, if necessary, corrected by a new survey or otherwise. The fifth section of the act then declares that "the said plat and survey, so finally determined by publication, order, or decree, as the case may be, shall have the same effect and validity in law as if a patent for the land so surveyed had been issued by the United States."

Counsel for the plaintiffs has argued that a patent from the United States is final and conclusive on everybody, and that the title which it confers cannot be disputed in a court of law.

No doubt, where the patent is for land to which the government had an undisputed title, the proposition is generally, if not always, true. But the United States, in dealing with parties claiming, under Mexican grants, lands within the territory ceded by the treaty of Mexico, never made pretence that it was the owner of them. When, therefore, guided by the action of the tribunals established to pass upon the validity of these alleged grants, the government issued a patent, it was in the nature of a quitclaim, — an admission that the rightful ownership had never been in the United States, but had passed at the time of the cession to the claimant, or to those under whom he claimed. This principle has been more than once clearly announced in this court. The leading cases are *Beard* v. *Federy*, 3 Wall. 478; *Henshaw* v. *Bissell*, 18 id. 255; *Miller* v. *Dale*, 92 U. S. 473.

Such a patent was, therefore, conclusive evidence only as between the United States and the grantee that the latter had established the validity of the grant.

The last of the cases above cited gives the history of the act of June 14, 1860, and holds that the effect of a compliance with the act is limited to the establishment of the conformity of the survey to the decree of confirmation, which fact could

not afterwards be disputed by any one who, under that act, had opportunity to contest it before the District Court.

We do not think, therefore, if the defendants' survey and patent are based upon a superior Mexican grant, that their rights are concluded by the prior survey of the plaintiffs.

2. It is insisted that a patent was issued in 1866, on a survey of the Guadalupe grant, which did not include the lands in controversy; that this action terminated the authority of the land-office in the matter; and that the subsequent survey and patent of 1870, which do include them, are, therefore, void.

It is not necessary to decide whether the refusal of the grantee to accept the patent in the present case, and his return of it to the Commissioner of the General Land-Office, who ordered a new survey, remove the objection here made, though it is not easy to see why his refusal to accept the patent, and his consent to its return, before intervening rights had accrued to any one, did not authorize a correction of any defect in that patent.

This is, in effect, what was done, and whether the patent of 1866 is still a valid patent, or is no longer of any force, cannot affect this case. If it be valid as to the land covered by it, that does not make void the patent of 1870 for land not covered by it.

If the conveyance of 1866 passed the title to the claimants of a part of the land covered by their confirmed grant, there is no reason why an additional patent should not convey the remainder when the proper officer became satisfied that the first did not convey all that had been confirmed to them. Nor is the last patent rendered invalid because, in addition to the land not conveyed by the first patent, it purports to convey also what was already patented.

In short, it is but the common case of a grantor who, having failed to convey what he was bound to convey, makes another deed to correct the wrong. The deeds are not in conflict. If the power of the land-office was exhausted by the first deed, it was only so as to the land which it included. The legal title to that alone could pass by that patent, and if the title to the land now in question remained in the government, the patent of 1870 was sufficient to convey it.

We think the error is not well assigned.

The only other assignment which requires notice is, that judgment should, on the pleading, have been rendered for the plaintiffs.

Plaintiffs averred that they were the owners of a certain large tract of land. That held by defendants was but a small part of this, and they, by their answer, did not set out their own metes and bounds, or any description of what they held, but denied that plaintiffs were the owners and entitled to *all* the land described in the complaint.

It is said that this made an immaterial issue; for if plaintiffs owned the land in possession of defendants, it was not necessary to prove their ownership of what lay outside of that, though claimed in their petition.

This objection was not made in the case before the Circuit Court. The case was submitted to the court, which found all the facts necessary to decide the question of title to the land held by defendants. We think it is too late to raise this technical question after a full hearing and finding by the court of all the facts pertinent to the case. The pleading would be good after verdict. *A multo fortiori* is it good after this finding, and on appeal, with no attempt to correct it in the court below.

Judgment affirmed.

UNITED STATES *v.* QUIGLEY.

A., a merchant residing in Georgia, left there at the commencement of the rebellion, and, until its close, remained in loyal territory. On leaving, he intrusted his business to an agent, who, with money collected or acquired on his account, purchased, in 1864, cotton subsequently captured by the United States and sold. A. sued for the net proceeds thereof in the Court of Claims. *Held*, that he was entitled to recover.

APPEAL from the Court of Claims.

The facts are stated in the opinion of the court.

Mr. Assistant Attorney-General Smith for the United States.

Mr. John D. McPherson, contra.

MR. CHIEF JUSTICE WAITE delivered the opinion of the court.

The facts of this case as gathered from the findings below are these: In 1860, the claimant, a native of Georgia, was domiciled at Dalton in that State, and doing business as a merchant. About the time the State seceded he left his home and his business and went to Indiana, where he remained until the end of the war. Before leaving he appointed an agent to manage for him while he was gone. This agent, in 1864, bought for him, with moneys collected or acquired on his account, two bales of cotton that were afterwards captured by the military forces of the United States at Savannah. The proceeds, $350.66, are now in the treasury under the Abandoned and Captured Property Act. On these facts the Court of Claims gave judgment against the United States, and to reverse that judgment this appeal was taken.

As was very properly said by the court below, if this claimant had remained at home in his native State and served the Confederacy during the entire war, acquiring his money and buying his cotton himself, this judgment would be right. No actual change of his domicile is shown, and his agent has done for him no more than he might himself have lawfully done if he had stayed where his property was. In no just sense was he trading across the lines with the enemy through the operations of this agent. He was simply saving what he had been compelled to leave, in order to avoid becoming in law an enemy of his government. His property being in enemy territory was enemy property, and subject to capture as such; but he was both in law and in fact a friend. The agency he left behind was only to manage what he could not take away; and as the money invested in the cotton was collected or acquired through this agency, we will presume it was obtained at the place he left rather than sent through the lines. If the facts were otherwise, the United States should have caused it to be so found. No other reasonable construction can be given to the findings as they appear in the record, than that the cotton is the proceeds of the property invested in the business the claimant was compelled to abandon in order to avoid becoming personally implicated in a rebellion against his government.

Judgment affirmed.

SWAN *v.* ARTHUR.

FLEITMAN *v.* ARTHUR.

FLEGENHEIM *v.* ARTHUR.

137-98

Laces, cigar ribbons, galloons, and braids made substantially of silk, although cotton forms a part thereof, were subject to a duty of sixty per cent *ad valorem*, under sect. 8 of the act of June 30, 1864, c. 171. 13 Stat. 181.

ERROR to the Circuit Court of the United States for the Southern District of New York.

The facts are stated in the opinion of the court.

Mr. Stephen G. Clarke for the plaintiffs in error.

Mr. Assistant Attorney-General Smith, contra.

MR. CHIEF JUSTICE WAITE delivered the opinion of the court.

Sect. 8 of the tariff act of June 30, 1864, c. 171 (13 Stat. 210), provides for the levy and collection of duties on imports, as follows: —

"On all dress and piece silks, ribbons, and silk velvets, or velvets of which silk is the component material of chief value, sixty per centum *ad valorem*. On silk vestings, pongees, shawls, scarfs, mantillas, pelerines, handkerchiefs, veils, laces, shirts, drawers, bonnets, hats, caps, turbans, chemisettes, hose, mitts, aprons, stockings, gloves, suspenders, watch chains, webbing, braids, fringes, galloons, tassels, cords, and trimmings, sixty per centum *ad valorem*.

"On all manufactures of silk, or of which silk is the component material of chief value, not otherwise provided for, fifty per centum *ad valorem*."

In one of the cases the importation was of laces, in another cigar ribbons, and in the other galloons and braids. The articles in each case were made of silk and cotton, but the silk preponderated so largely that they were substantially silk. The collector charged them with duties at the rate of sixty per cent *ad valorem*, as silk laces, ribbons, galloons, and braids, while the importers claimed they were dutiable at fifty per cent only, as manufactures of which silk was the component material of chief value, not otherwise provided for. These

suits were brought to recover back what had been paid in excess of fifty per cent. In the cases for the laces, galloons, and braids the evidence was positive and uncontradicted to the effect that they were substantially made of silk, and there was no claim that they were commercially known otherwise than as silk goods. Upon these facts the court directed a verdict in favor of the defendant. In the case for the ribbons, the jury was instructed that if the goods were made substantially of silk, and were not commercially regarded as different from silk ribbons, a verdict must also be returned for the defendant. In the last case there was some evidence which, it was claimed, showed that the particular kind of ribbon imported had, by usage, been taken out of the commercial designation of silk ribbons. These writs of error have been brought to reverse the judgments which followed from these rulings.

We think the court below was right in the view it took of the law. While tariff acts are generally to be construed according to the commercial understanding of the terms employed, language will be presumed to have the same meaning in commerce that it has in ordinary use, unless the contrary is shown. Outside of commerce there can hardly be a doubt that laces, ribbons, galloons, and braids made substantially of silk would be denominated silk goods. Until, therefore, it was shown that they were regarded differently by dealers, it was right to class them as dutiable at sixty per cent. The burden of bringing them under the reduced rate was thrown on the importer. So far as the laces, galloons, and braids are concerned, there was no attempt to do so, and in respect to the ribbons the attempt that was made failed before the jury. We cannot believe that what are bought and sold in the market as dress or piece silks are not in commercial designation silks because they are to some extent adulterated with a cheaper fibre, if the silk so far predominates over the inferior material that it can be said they are made substantially of silk. If that is true of piece silks it certainly must be of laces, ribbons, galloons, and braids. So, in general, it may be said, as we think, that all goods made substantially of silk will be treated as silk commercially, unless it directly appears that commerce has given another name to the admixture.

Judgments affirmed.

KENNEDY v. INDIANAPOLIS.

374-324
126-660

1 Sect. 7, art. 1, of the Constitution of Indiana, adopted in 1816, provides "that no man's particular services shall be demanded, or property taken or applied to public use, without the consent of his representatives, or without a just compensation being made therefor." Under an act of the General Assembly, "to provide for a general system of internal improvements," approved Jan. 27, 1836, the board thereby created was authorized to enter upon, take possession of, and use lands. *Held*, that the right to enter and use them was complete as soon as they were actually appropriated under the authority of that act, but that the title to them did not, without the consent of the owner, vest in the State until just compensation was made to him therefor.

2. The decisions of the Supreme Court of Indiana upon the point cited and examined.

3. In this case nothing was paid, it being considered that the benefits resulting from the construction of the contemplated work would furnish the owner just compensation for the land taken. The work was never constructed, and the State sold the property. *Held*, that no title passed to the purchaser.

APPEAL from the Circuit Court of the United States for the District of Indiana.

The facts are stated in the opinion of the court.

The case was argued by *Mr. Benjamin Harrison* for the appellants, and by *Mr. S. Claypool* and *Mr. David Turpie* for the appellees.

MR. CHIEF JUSTICE WAITE delivered the opinion of the court.

This is a suit in equity brought by the appellants to quiet title to certain lands in the city of Indianapolis. The facts are as follows: By an act of the General Assembly of Indiana "to provide for a general system of internal improvements," passed Jan. 27, 1836 (Rev. Stat. Ind., 1838, p. 337, sect. 4), the board of internal improvements was authorized and directed to construct, among other public works, the Central Canal, commencing at the most suitable point on the Wabash and Erie Canal between Fort Wayne and Logansport, running thence to Muncietown, thence to Indianapolis, and thence to Evansville on the Ohio River. For this purpose the board was authorized to enter upon, take possession of, and use any lands necessary for

the prosecution and completion of the work. Sect. 16. In all cases where persons felt aggrieved or injured by what was done, a claim could be made for damages, which were to be appraised in a way specially provided for, but in making the appraisement the benefits resulting to the claimant from the construction of the work were to be taken into consideration. Any sum of money thus found to be due was to be paid by the board, but no claim could be recovered or paid unless made within two years after the property was taken possession of. Sect. 17. The board was also authorized to acquire, by donation or purchase, for the State, the necessary ground for the profitable use of any water-power that might be created by the construction of the canal, and to lease, for hydraulic purposes, any surplus of water there might be over and above what was required for navigation. Sects. 22, 23.

The Constitution of the State, adopted in 1816, which was in force when this act was passed, and until all the rights of the State under it had been acquired, contains the following as art. 1, sect. 7: "That no man's particular services shall be demanded, or property taken or applied to public use, without the consent of his representatives, or without a just compensation being made therefor."

The town plat of Indianapolis was laid out on lands granted by Congress to Indiana for a seat of government. On this plat, as originally made, Missouri Street extended across the town from north to south, a distance of one mile. The board of internal improvements located the Central Canal in this street throughout its entire length. From the southerly end of the street the location extended in that direction across what was then known as outlots 121, 125, and 126. These lots were owned, 126 by one Coe, and the other two by Van Blaricum. During the year 1840 or before, the canal was actually built, filled with water, and to some extent navigated from Broad Ripple, a point on the west fork of the White River, about nine miles north of Indianapolis, to a lock in Missouri Street, at Market Street. From Market Street the canal was actually dug, and its banks built to another lock, a distance of a mile or more below; but it was never filled with water for the purposes of navigation, or, in fact, opened for navigation. The lower

lock would perhaps hold the water in the level above, but would not pass a boat below.

About the time this part of the work was finished, the whole project of completing the canal was abandoned, and has never since been resumed. Considerable work had been done on the line as a whole before the abandonment, but the only part ever opened for navigation to any extent whatever was that between Broad Ripple and the Market Street lock. The premises in controversy are between Market Street and the next lock below.

The State made a lease of water-power to be used at this lower lock, and for many years conducted the water to supply that lease through the canal as constructed below Market Street. No other use of the canal was ever made by the State for any purpose, and both the city and the owners of the several outlots have at all times been permitted to fence, bridge, and occupy the property as they pleased, provided they did not interrupt the flow of water to supply the power to a mill that had been built below.

Neither the town of Indianapolis nor Coe ever made any claim on the State for compensation on account of the appropriation of their property. Van Blaricum did, however, do so, and he prosecuted his claim until 1848, when it was finally decided against him. It is conceded that no damages were ever awarded him. The defendants, other than the city of Indianapolis and the railroad company, are the owners of all the title to the outlots occupied by the canal which did not pass to the State under the appropriation that was made.

In 1850, the General Assembly of Indiana passed an act to sell the canal, and under the authority of that act all the part of the canal north of Morgan County, including the premises in controversy, was conveyed to one Francis N. Conwell for the sum of $2,425. From Conwell the title, such as he got, passed by sundry conveyances to the Water-works Company of Indianapolis. Afterwards that part of the premises south of Market Street, not being essential to the business of the Water-works Company, was sold to the Indianapolis, Cincinnati, and Lafayette Railroad Company.

Between 1872 and 1874, the city of Indianapolis, the legal

successor of the town, took actual possession of Missouri Street below the Market Street lock, and used it for sewerage purposes, building a sewer therein and filling up the canal. About the same time McKernan, the ancestor of the present appellees of that name, filled up the canal on the outlots in question, and erected one or more houses thereon. This bill was filed by the mortgagees of the railroad company to quiet the title of the company to this property and protect their security. On the hearing the Circuit Court dismissed the bill for the reason that the appropriation by the State was not sufficient to divest the owners of their title, and consequently the railroad company took nothing by the conveyances under which it claims.

According to the later decisions of the Supreme Court of Indiana, when lands were taken by the State under the internal improvement laws, and just compensation made to the owners, the title in fee was transferred from the owner to the State. *Water-works Company of Indianapolis* v. *Burkhart*, 41 Ind. 364; *Nelson* v. *Fleming*, 56 id. 310. The earlier decisions were the other way. *Edgerton and Others* v. *Huff*, 26 id. 35. But, so far as we have been able to discover, it has never yet been held that the *title* passed out of the owner until "just compensation" had actually been made. In fact, the decisions appear to have been uniformly to the effect that it did not. Thus, as early as 1838, in *Rubottom* v. *McClure* (4 Blackf. 505), it was said in reference to a statute, of which the one now under consideration is almost a literal copy, that it insured "to any individual whose interest may have been made to yield to the public good, remuneration for his loss. Actual payment to him is a condition precedent to the investment of the title to the property in the State, but not to the appropriation of it to public use." This was followed in 1846 by *Hankins* v. *Lawrence*, 8 id. 266. That was a case in which the White Water Valley Canal Company had acquired the title of the State to the White Water Canal, one of the works the board of internal improvements was authorized to construct under the act of 1836, and the question was whether it could, under its charter, enter upon lands to complete that canal, for the purposes of its incorporation, without first having made just compensation to the owner. Upon this the court said: "The

question whether payment must be made before the land is taken and used . . . has been already decided by this court. . . . The possession and use of the land in question by the White Water Valley Canal Company are upon the condition subsequent, that they will not be in default with respect to the payment for the same as prescribed by the charter, nor with respect to the erecting of the works for which the land is taken. It may be that, should any person claiming under the company remain in possession of the land after a default in such payment, or in erecting the works, he would be considered as a trespasser *ab initio*." So far as we have been advised, these cases are still the law of Indiana, and they are certainly supported by high authority. Thus, in *Rexford* v. *Knight* (11 N. Y. 308), the Court of Appeals of New York, speaking of statutes similar to that of Indiana, says: "The construction upon those acts has been that the fee did not vest in the State until the payment of the compensation, although the authority to enter upon and appropriate the land was complete prior to the payment." And so, in *Nichols* v. *Som. & Ken. Railroad Co.* (43 Me. 359), the Supreme Court of Maine, in speaking of an article of the Constitution of that State which declared that private property should not be taken for public uses without just compensation, uses this language: "While it prevents the acquisition of any title to land or to an easement in it, and does not permit a permanent appropriation of it, as against the owner, without the actual payment or tender of a just compensation, it does not operate to prohibit the legislature from authorizing a temporary exclusive occupation of the land of an individual as an incipient proceeding to the acquisition of title to it, or to an easement in it for a public use, although such occupation may be more or less injurious to the owner. Such temporary occupation, however, will become unlawful, unless the party authorized to make it acquire, within a reasonable time from its commencement, a title to the land, or at least an easement in it." And again, in *Cushman* v. *Smith* (34 id. 247): "The design seems to have been simply to declare that private property shall not be changed to public property, or transferred from the owner to others for public use, without compensation." Not to multiply cases further, it seems to us that both

on principle and authority the rule is, under such a constitution as that of Indiana, that the right to enter on and use the property is complete as soon as the property is actually appropriated under the authority of law for a public use, but that the title does not pass from the owner without his consent until just compensation has been made to him.

We proceed now to apply this rule to the facts. It is not contended that compensation in money was made for any of the land in dispute. Van Blaricum claimed money, but the tribunal to which, under the statute, his application was referred decided against him. In effect he was told, in answer to his application, that the benefits he would receive from the construction of the canal would be "just compensation" to him for his property taken. The town and the lot-owners adjoining Missouri Street made no claim for compensation. Neither did Coe, the owner of lot 126. In this way these parties signified under the law their willingness to take as their compensation the benefits which would result to them respectively from the construction of the canal. The appropriation was for public use by means of a canal, and the owners were to be paid their compensation for the land taken by the construction of a canal thereon. It would seem to follow that if the canal was constructed the compensation which the Constitution guaranteed the owner would be made; otherwise not. If the canal was in law built, therefore, the title passed to the State; if not, it remained in the owner. The failure to claim damages within the two years was no more than a waiver of all compensation except such as grew out of the benefits resulting from the construction of the work for which the appropriation was made. To hold that the title passed by mere appropriation, if no claim for damages was made within the two years, would be in effect to decide that if the State entered on land for a particular use and kept possession as against the owner for two years, it got a title in fee whether the property was actually put to the use or not. Such we cannot believe to be the law.

Was there, then, such a canal constructed over and upon the lands in question as the internal improvement act, under which the appropriation was made, contemplated? A canal in the sense which that term implies in this connection means a navigable

public highway for the transportation of persons and property. It must not only be in a condition to hold water that can be used for navigation, but it must have in it, as part of the structure itself, the water to be navigated ready for use. Such an instrumentality for "the advancement of the wealth, prosperity, and character of the State" (*Rubottom* v. *McClure*, *supra*) might confer benefits that would be a just compensation for the private property taken for its use; but until such a structure is actually furnished complete, it can in no proper sense be said that the works have been constructed from which the benefits that are to make the compensation can proceed. A mill-race carrying water for hydraulic purposes is not enough. There must be a canal fitted in all respects for navigation and open to public use, before the benefits can accrue to the owner which are under the law to overcome his claim for damages. No authority was given the board of improvements to appropriate lands for the use of the water-power created by the canal. That could only be acquired by donation or purchase (sect. 16), and no power could be leased until there was a surplus of water. The canal was to be built for navigation. If when built there was found to be more water than was wanted as a means of transportation, it might be leased, but until there was a canal for navigation there was in law none for power. The use of the water for hydraulic purposes was but an incident to the principal object of the work to be done.

There can be no pretence that this canal was ever navigated below Market Street, or put in a condition for navigation. It was accepted from the contractor, and may have had all its banks and its bed complete; but it is evident from the testimony that it was never finished so that it could be actually used as a navigable canal, and it certainly was never opened by the State to public use in that way. More work had been done on it than on some other parts of the line, but still it was unfinished when the abandonment of the enterprise took place.

We are aware that in the case of the *Water-works Company* v. *Burkhart*, *supra*, the Supreme Court of Indiana decided that the title to the land then in dispute had passed from the owner to the State, but that was on the level above Market Street, which had been not only made navigable but had actually been

to some extent navigated. The owner, too, had been awarded and paid damages in money. So in *Nelson* v. *Fleming*, *supra*, the canal was completed and had been in actual use by the public as such for a period of between thirty and forty years before the abandonment occurred. In both these cases, according to the rule that has been stated, the compensation was actually made and the title passed. There the question was one of reversion after title once acquired. Here, as we think, the State never got title, since the requisite compensation was never made. Consequently, the State had no title to this property to convey, and the railroad company took nothing by its purchase. It follows that the decree below was right, and it is consequently

Affirmed.

BABBITT v. CLARK.

134-46
407-178
140-142

103 [illegible]
L-ed 56[illegible]
541 8

1. Under the act of March 3, 1875, c. 137 (18 Stat., pt. 3, p. 470), a writ of error is the proper mode for reviewing here the order of the Circuit Court remanding an action at law removed thereto from a State court, and it lies without regard to the value of the matter in dispute.
2. The removal should not be granted, if the petition therefor be not filed in the State court before or at the term at which the action could be first tried, and before the trial thereof. Where, therefore, a cause, by the practice of the State court, stood for trial upon the issue raised by the petition and answer, the rule-day having expired without filing a reply, and the plaintiff then filed in the clerk's office a reply, without leave or notice, and the cause was continued until the ensuing term, when, before the cause was called for trial, the defendant presented his application for its removal, — *Held*, that the application should not have been granted, and the order of the Circuit Court remanding the cause was proper.

APPEAL from the Circuit Court of the United States for the Northern District of Ohio.

The facts are stated in the opinion of the court.

Mr. John C. Lee for the appellant.

Mr. Isaac C. Pugsley for the appellees.

MR. CHIEF JUSTICE WAITE delivered the opinion of the court.

This suit was brought by Parker P. Clark, George H. Clark,

Elijah F. Clark, and George P. Burnett, the appellees, citizens of New York, in the Court of Common Pleas of Lucas County, Ohio, against Albert T. Babbitt, the appellant, a citizen of Wyoming Territory. By the statutes of Ohio regulating practice and pleadings in the courts of that State, a civil action is commenced by filing a petition in the office of the clerk of the proper court, and causing a summons to be issued thereon. Rev. Stat., Ohio (1880), sect. 5035. The summons is ordinarily returnable the second Monday after its date. Id., sect. 5039. The only pleadings are, a petition, demurrer, answer, and reply. Id., sect. 5059. The rule-day for the answer or demurrer to a petition is the third Saturday, and for a reply to the answer the fifth Saturday, after the return-day of the summons; but the court, or a judge thereof in vacation, may for good cause shown extend the time. Id., sects. 5097, 5098. Every material allegation of the petition not controverted by the answer, and every material allegation of new matter in the answer not controverted by the reply, is for the purposes of the action to be taken as true, but the allegation of new matter in the reply is deemed controverted by the adverse party. Id., sect. 5081. When the action is founded on a written instrument as evidence of indebtedness, a copy thereof must be attached to and filed with the petition. Id., sect. 5085. A trial is defined to be "a judicial examination of the issues, whether of law or fact, in an action or proceeding." Id., sect. 5127. And all actions are triable as soon as the issues therein, by the time fixed for pleadings, are, or ought to have been, made up. Id., sect. 5135.

The petition in this action was filed on the 28th of October, 1878, and alleged that on the 10th of June, 1878, the plaintiff recovered judgment in the Court of Common Pleas of the City, County, and State of New York, against Babbitt and one Edgar A. Weed for $2,626.80 debt and costs, which was in full force and unsatisfied, except "by the following payments, to wit, one of $311.92, and a further payment of $887.50 made, to wit, Oct. 1, 1878." Judgment was asked for the balance which remained unpaid, and interest at seven per cent. From the record of the New York suit found in the transcript sent up on this appeal, it appears that the action in that court

was brought Aug. 7, 1877, to recover a debt for goods sold Babbitt & Weed, Feb. 8, 1877, which it was alleged had been created by the fraud of Babbitt. The answer, which was by Babbitt alone, admitted that the debt had been contracted, but denied the fraud. It then alleged by way of defence, that on the 7th of July, 1877, proceedings in bankruptcy were instituted against Babbitt and Weed in the District Court of the United States for the Northern District of Ohio, which resulted in the acceptance by the creditors of the bankrupts and an approval by the court of a proposition for composition under sect. 17 of the act of June 22, 1874, c. 390 (18 Stat., pt. 3, p. 182), by which the bankrupts were to give their notes indorsed by T. S. Babbitt to their several creditors for forty cents on the dollar of their debts, divided into three equal parts, and payable in three, six, and nine months, respectively, from July 15, 1877, and that notes for the several amounts due the plaintiffs, according to the terms of the composition, were executed and tendered them in proper time, and ever since had been and were subject to their order and disposal. Upon the issue thus made a trial was had, which resulted in the judgment now sued on.

The summons in the present action bears date Dec. 4, 1878, and Jan. 4, 1879, at rules, Babbitt filed his answer, in which he denied that the several payments credited on the judgment in the petition were made by himself or Babbitt & Weed, but averred that the item of $311.92 was collected by a sale of property on execution, and that of $887.50 was paid the plaintiffs by John R. Osborn, a register in bankruptcy. He then set forth the proceedings in bankruptcy and the composition, substantially as stated in his answer in the New York suit. He then alleged that the composition notes intended for the plaintiffs were paid to Osborn, the register in bankruptcy, as they matured, and that on the 11th of September, 1878, the plaintiffs took from the register the money in his hands for them, with a full knowledge of all the facts.

The rule-day for a reply to this answer was Jan. 18, 1879, but no reply was filed at that time, and no extension of time was asked or given.

The cause, therefore, under the law regulating the practice

of the court, stood for trial on the issues presented by the petition and answer. A term of the court began on the 2d of January, and did not end until the 7th of April, though nothing but formal business was done after March 24.

On the 3d of April the plaintiffs filed in the clerk's office a reply without leave of the court, and without notice to Babbitt or his counsel. In this reply the facts in relation to the New York suit are set forth substantially as they appear on the record sued on, and it was insisted that the acceptance of the money from the register in bankruptcy did not operate in law as a satisfaction of the judgment. The next term of the court began on the 28th of April, and on the 3d of May the plaintiffs, also without leave of the court, filed an amendment to their reply, in which they set out certain unsuccessful proceedings by Babbitt in the New York court on the 5th of July, 1878, to obtain an injunction against the further execution of that judgment because of his payment of the composition notes to the register in bankruptcy.

On the 17th of May, which was during the term of the court that began on the 28th of April, and before the cause had ever been called for trial, Babbitt filed his petition to remove the suit to the Circuit Court of the United States for the Northern District of Ohio, on the ground that his defence, "which was made by answer filed in due time," was "one arising under the Constitution and laws of the United States." The State court ordered the suit transferred, but the Circuit Court on motion remanded it because the petition for removal was not filed in time. To reverse that order the case has been brought here by *appeal*.

It is insisted that we have no jurisdiction, — 1, because an order of a circuit court remanding a cause to a State court on the ground that the petition for its removal from that court had not been presented in time, is not reviewable here either on writ of error or appeal; 2, because, if reviewable at all, this case should have been brought here by writ of error rather than appeal; and, 3, because the value of the matter in dispute does not exceed $5,000.

Before the act of 1875, c. 137 (18 Stat. 470), we held that an order by the Circuit Court remanding a cause was not such

a final judgment or decree in a civil action as to give us jurisdiction for its review by writ of error or appeal. The appropriate remedy in such a case was then by *mandamus* to compel the Circuit Court to hear and decide. *Railroad Company* v. *Wiswall*, 23 Wall. 507; *Insurance Company* v. *Comstock*, 16 id. 258. But the fifth section of that act provides that if it satisfactorily appears to the Circuit Court that a suit has been removed from a State court which does not really and substantially involve a controversy properly within the jurisdiction of the Circuit Court, it may be remanded, and the order to that effect shall be reviewable by this court "on writ of error or appeal, as the case may be."

The appellees contend that the right of appeal or writ of error which is here given applies only to cases which are remanded because the subject-matter of the controversy is not one within the jurisdiction of the Circuit Court. The language of the statute might be more explicit in this particular than it is; but we think it may fairly be construed to include a case where the Circuit Court decides that the controversy is not properly within its jurisdiction because the necessary steps were not taken to get it away from a State court, where it was rightfully pending. The right to remove a suit from a State court to the Circuit Court of the United States is statutory, and to effect a transfer of jurisdiction all the requirements of the statute must be followed. If this is done, the controversy is brought properly within the jurisdiction of the Circuit Court, and may be lawfully disposed of there; but if not, the rightful jurisdiction continues in the State court. When, therefore, the Circuit Court decides that a controversy has not been lawfully removed from a State court, and remands the suit on that account, it in effect determines that the controversy involved is not properly within its own jurisdiction. The review of such an adjudication is clearly contemplated by the act of 1875.

We think, also, this right of review has been given without regard to the pecuniary value of the matter in dispute. There is no pecuniary limit fixed to our jurisdiction in the act of 1875 itself. Final judgments and decrees in the circuit courts in civil actions cannot ordinarily be brought here for review unless

the value of the matter in dispute exceeds $5,000 (Rev. Stat., sects. 691, 692; 18 Stat. 315, c. 77, sect. 3); but an order of the Circuit Court remanding a removed suit to the State court is in no just sense a final judgment or decree in the action. It simply fixes the court in which the parties shall go on with their litigation. Under the old law there was no pecuniary limit to our jurisdiction to proceed in this class of cases by *mandamus*, and we think it was the intention of Congress to substitute appeals and writs of error for that mode of proceeding. If the new remedies are found to be productive of vexatious delays on account of the great accumulation of business in this court, it will be easy for Congress to do away with the evil by a repeal of the law. It follows that if the order in question could properly be brought here by appeal, we have jurisdiction.

Congress evidently intended that orders of this kind made in suits at law should be brought here by writ of error, and that where the suit was in equity an appeal should be taken. That is the fair import of the phrase, "writ of error or appeal as the case may be." This was a suit at law, and consequently should have been brought up by writ of error. There seems to have been very little attention paid to this distinction heretofore, and we now find that we have often considered cases on writ of error that ought to have been presented by appeal, and on appeal when the proper form of proceeding would have been by writ of error. No objection was made, however, at the time, and we did not ourselves notice the irregularity. Without deciding whether we would reverse the order of a circuit court if objection were made when the case was brought up in a wrong way, we are not inclined to delay a decision on the merits in this case because of the irregularity which appears, as we think the suit was properly remanded, and the order to that effect should be affirmed.

The act of 1875 requires that the petition for removal shall be filed in the State court at or before the term at which the suit could be first tried and before the trial. The answer of Babbitt in this case was filed in time, and the rule-day for a reply expired on the 18th of January. Had the case been called at any time after that date and before April 3, neither

party could have objected to a trial on the pleadings as they then stood. As no reply had been filed, the new facts set out in the answer would have been taken as true, and the rights of the parties determined accordingly. The case arising under the Constitution and laws of the United States was presented by the answer, and the right of Babbitt to his removal was as apparent then as now. It needed no reply to put his case in a condition for judicial examination. His answer required the court to determine whether in law, with all the facts set out and uncontroverted, his composition in bankruptcy presented a valid defence to the judgment sued on. The pleadings presented, to say the least, an issue of law to be tried.

It is true that after the court had substantially closed the business of the term, and had stopped the trial of causes, a reply was put on file without leave, which was supplemented the next term, also without leave, and that in this way the issues as they originally stood may have been to some extent changed; but that does not, in our opinion, relieve Babbitt from the consequences of his delay. The act of Congress does not provide for the removal of a cause at the first term at which a trial can be had on the issues, as finally settled by leave of court or otherwise, but at the first term at which the cause, as a cause, could be tried. Under sect. 12 of the act of 1789, c. 20 (1 Stat. 79), the application for removal must have been made by the defendant when he entered his appearance, but under the acts of 1866, c. 288 (14 Stat. 306), and 1867, c. 196 (id. 558), it might be effected at any time before trial. This was the condition of existing legislation when the act of 1875 was passed, and the language of that act shows clearly a determination on the part of Congress to change materially the time within which applications for removal were to be made. It was more liberal than under the act of 1789, but not so much so as in the later statutes. Under the acts of 1866 and 1867 it was sufficient to move at any time before actual trial, while under that of 1875 the election must be made at the first term in which the cause is in law triable.

Clearly, under the laws of Ohio, this case was in a condition for trial, and actually triable, more than two months before the

January Term closed. It follows that the presentation of the petition for removal at the next term was too late, and the order of the Circuit Court remanding the cause on that account is consequently

Affirmed

HOYT v. SPRAGUE.

FRANCKLYN v. SPRAGUE.

138-472

108 613
L.ed 589
146 116

1. If the executor of a deceased partner consents to the surviving partners continuing the business with the assets of the firm, his lien on property thereafter acquired will be postponed to that of creditors, when a case arises for an equitable marshalling of assets; as, where the surviving partners make a general assignment for the benefit of creditors.
2. In such case, the beneficiaries of the deceased partner's estate cannot have priority over the claims of creditors upon the partnership assets.
3. The property of minors, equally with that of adults, is subject to the *lex rei sitæ*, though the minors reside in another State or country. The local law may provide for the guardianship of such property, and for its administration and investment. By comity only will anything be conceded to the claims of the guardian of the domicile; although it is usual, by comity, to appoint, if due application be made for that purpose, the same person guardian who was appointed by the domiciliary court.
4. In the absence of constitutional restraint, the legislature may pass special laws for the sale or investment of the estates of infants or other persons who are not *sui juris*.
5. Where an executor and guardian in Rhode Island, by virtue of such a special law, and by order of the Probate Court, conveyed the property of infants to a manufacturing corporation, by way of investment in its capital stock, — *Held*, that the conveyance and investment were protected by the law, and that no account could be demanded except for the stock and its dividends.
6. Where minors were interested in a manufacturing establishment, as beneficiaries under a deceased partner, and the administrator, who was also their guardian, without any fraud, but with entire good faith, allowed the business to be continued by the surviving partners for several years, without filing any inventory or account; and the property suffered no deterioration, but increased in value, and was then, by virtue of a special law, transferred to a corporation created for the purpose; and the beneficiaries, after that, for more than seven years subsequently to coming of age, received dividends on their share of the stock and annual stated accounts, — *Held*, that, by reason of such acquiescence, they could not sustain a bill in equity for an account of the estate.

APPEALS from the Circuit Court of the United States for the District of Rhode Island.

The facts are stated in the opinion of the court.

Mr. William Allen Butler and *Mr. George F. Comstock* for the appellants.

Mr. Charles Thurston and *Mr. Benjamin F. Thurston, contra.*

MR. JUSTICE BRADLEY delivered the opinion of the court.

These cases come up on appeal from the decrees of the Circuit Court for the District of Rhode Island dismissing the complainants' bills. One of the bills was filed by William S. Hoyt and the other by Charles G. Francklyn and Susan his wife, against Amasa Sprague, William Sprague, individually, and as guardian of the said Hoyt and said Susan; Fanny Sprague, widow and administratrix of Amasa Sprague, Sen.; Mary Sprague, widow and administratrix of William Sprague, Sen., and formerly guardian of said Hoyt and said Susan; The A. & W. Sprague Manufacturing Company, and Zechariah Chafee, assignee of said company for the benefit of creditors, &c. The general object of the bills is, to establish a lien and trust in favor of the complainants, as grandchildren of William Sprague, Sen., against the property of the A. & W. Sprague Manufacturing Company, now in the hands of Chafee, the assignee, each to the extent of one twenty-fourth part of the whole property; that being the amount of their interest in the property of the former firm of A. & W. Sprague, which was transferred to the corporation in 1865, whilst the complainants were infants, in fraud, as they allege, of their rights.

Many charges of fraud are made in the bills against the defendants Amasa Sprague and William Sprague, who carried on the business of the firm after the death of William Sprague, Sen., in 1856, in connection with Byron Sprague, until 1862, and after that by themselves. The cases are substantially the same in all respects, and will be considered together.

In order properly to understand the questions raised it will be necessary to take a summary view of the facts.

Amasa Sprague and William Sprague, brothers, under the

name of A. & W. Sprague, carried on the manufacturing business in Rhode Island until 1843, when Amasa died, leaving a widow, Fanny Sprague, and four children, two sons and two daughters. The widow took out letters of administration on her husband's estate. The value of the partnership property at that time was estimated at $100,000. William continued to carry on the business with the joint capital, under the same firm name, for the benefit of himself and his brother's family, for thirteen years, when, on the 19th of October, 1856, he died, leaving a widow, Mary Sprague, a son, Byron Sprague, and four grandchildren, who were the children of a deceased daughter, Susan, and her husband, Edwin Hoyt, of the city of New York. These children were at that time under fourteen years of age. Their names were Sarah, Susan S., William S., and Edwin Hoyt, Jr. Sarah was twelve, Susan eleven, and William S. was nine years old at the time of their grandfather's death. William S. Hoyt is the complainant in one of the cases now under consideration, and Susan S. Hoyt, now wife of Charles G. Francklyn, with her husband, is complainant in the other case.

William Sprague largely extended the business of the firm, so that when he died the property, real and personal, was estimated at about $3,000,000. Shortly before his death, and during his last illness, he took into partnership with him, evidently for the purpose of continuing the business and keeping it together, his own son, Byron, and his two nephews, Amasa and William, the sons of his deceased brother Amasa. The terms of this partnership, and the interest which the young men were to have in it, does not appear. They continued, after William Sprague, Sen.'s, death, to carry on the business, as it had previously been carried on, under the name of A. & W. Sprague, without making a settlement with the representatives or beneficiaries of either Amasa Sprague's or William Sprague's estate.

William Sprague, Sen., left no will; and his widow, Mary Sprague, took out letters of administration on his estate. Whilst, therefore, the three young men, Byron Sprague, Amasa Sprague, and William Sprague, as surviving partners of William Sprague, Sen., carried on the business of the firm of A. &

W. Sprague, the persons really interested were, first, the two widows and administratrixes, Fanny Sprague and Mary Sprague, who were legally entitled respectively, by right of administration, to the several interests of Amasa Sprague, Sen., and William Sprague, Sen.; and, secondly, the beneficiaries, or distributees of the estates of Amasa and William, respectively, namely, the widow and four children of Amasa Sprague, Sen., and the widow and two children of William Sprague, Sen., — one of the latter, Mrs. Hoyt, being deceased, and being represented by her four children.

One of the daughters of Amasa Sprague had been settled with before William's death, and the other shortly afterwards, by her brothers purchasing her interest. This left the beneficial interest of the property divisible into six equal parts, belonging respectively to Fanny Sprague, widow of Amasa, and her two sons, Amasa and William, and Mary Sprague, widow of William, her son Byron, and the children of her daughter, Susan Hoyt. These persons were all of age, and otherwise *sui juris*, except the Hoyt children, and were all able to consent, and did consent, that the entire partnership estate should be continued in the business of the firm as it had been before. The Hoyt children, of course, could not give any such consent. They resided with their father, Edwin Hoyt, in New York, who was at the head of a commission-house in that city by the name of Hoyt, Spragues, & Co., which sold on commission a large portion of the goods manufactured by A. & W. Sprague. The partners of the firm were associated with him. Of course he must have been well acquainted with the business of the manufacturing establishment, and the large interest which his children had in the concern must have insured his attention to its management. Mr. Hoyt consented to and approved of the continuance of his children's portion in the business of the partnership; and his natural regard for their interests, in connection with his opportunities for observation, preclude the presumption that such continuance was the result of any fraudulent scheme. Had any such scheme been in contemplation, he must have detected and would have thwarted it.

In addition to the consent and acquiescence of their father,

was that of their property guardian in Rhode Island. On the 9th of February, 1857, shortly after William Sprague, Sen.'s, decease, letters of guardianship were issued by the Probate Court of the town of Warwick, R. I., to Mary Sprague, grandmother of the Hoyt children, on the property of said children. Mrs. Sprague consented that both her own interest in the estate and that of her grandchildren and wards should be continued in the partnership business. At that time (1857) this business was no doubt regarded by most persons who had any acquaintance with it as highly prosperous, and an investment in it advantageous and safe. And whilst, according to the strict rules of law, Mary Sprague should have drawn out the children's share, and should not have left it to the hazards of trade, it may be said in her excuse that she was following out the plan of her husband, who had for thirteen years induced his brother's widow to continue the interest of her children in the concern, and had thereby greatly increased their inheritance. At all events, we have no evidence that Mary Sprague was actuated by any other than the most worthy motives in permitting everything to remain in the business. Any charge of fraud against her cannot be entertained for a moment.

The business was conducted without change until 1862, when Byron Sprague sold out his interest to Amasa and William, and upon an account taken at that time said interest was valued at $605,722.78, which amount was accordingly paid to him. No other change in the situation of the parties interested took place until 1865, when it was proposed to place the property of A. & W. Sprague in a corporation, or corporations, charters having been obtained from the legislature of Rhode Island for that purpose. One of these charters was passed in May, 1862, and constituted Byron Sprague, William Sprague, and Amasa Sprague, and their associates, successors, and assigns, a body corporate and politic by the name of A. & W. Sprague Manufacturing Company, with a capital stock of $1,000,000, to be divided into shares of $100 each.

In view of such proposed corporate organization, Mary Sprague, as guardian of her grandchildren, and Edwin Hoyt, their father, in January, 1863, presented a petition to the legis-

lature of Rhode Island, in which, after stating the appointment of Mary Sprague as the guardian of the estate of said minors, and their interest in the property of A. & W. Sprague, they stated that they deemed it advisable to invest the same in such corporations as should be organized under the charters previously granted; and they asked that the said Mary, as such guardian, might be authorized to make such conveyance as would be necessary to that end. On the 9th of March, 1863, a joint resolution of the legislature was passed, granting said petition, which resolution was in the following terms: —

"Resolution authorizing Mary Sprague, of Warwick, guardian, to make conveyance of the interest of minors in and to the property of the firm of A. & W. Sprague.

"Upon the petition of Mary Sprague, of Warwick, widow of William Sprague, late of Warwick, deceased, and of Edwin Hoyt, of the city and State of New York, representing that the said Mary is guardian of the estates; and the said Edwin, father of Edwin Hoyt, Jr., Susan S. Hoyt, Sarah Hoyt, and William S. Hoyt, minor children and heirs-at-law of Susan Hoyt deceased, and praying, for certain reasons, that the said Mary may be authorized and empowered to make conveyance in her said capacity, of all the right, title, and interest of said minor children, as heirs-at-law of their said mother, in and to all the estate and property, real, personal, and mixed, now held, owned, and managed by the firm of A. & W. Sprague of Providence:

"*Voted and resolved*, that the prayer of said petition be and the same is hereby granted; and the said Mary Sprague, in her capacity as guardian of the estate of Edwin Hoyt, Jr., Susan S. Hoyt, Sarah Hoyt, and William S. Hoyt, is hereby authorized and fully empowered, whenever any corporation or corporations shall be organized under either or any of the charters heretofore granted by the General Assembly of this State, and conveyance or conveyances shall become necessary to vest the title of the parties interested in any of said property so held, owned, or managed by the firm of A. & W. Sprague, in any such corporation or corporations, to make, execute, seal, acknowledge, stamp, and deliver all and any such conveyance and conveyances to any such corporation or corporations as shall be necessary to vest the right, title, and interest of the said minors in and to said property, or any portion thereof, in any such

corporation or corporations; and that any such conveyance or conveyances so executed, acknowledged, stamped, and delivered shall be deemed and held as valid and effectual in law and in equity to vest the title of said minors in any such corporation or corporations as though the same were executed, acknowledged, stamped, and delivered by said minors after attaining their majority.

"*Provided*, that before the delivery of any such conveyance or conveyances, the said Mary shall have executed and delivered to the Court of Probate of Warwick every such bond or bonds with herself in her said capacity, and said Edwin Hoyt, as principals, in such penal sum or sums and with such sureties as said probate court shall require, conditioned for the investment of the amount of the full value of the interests of said minors, which she shall then be about to convey in the capital stock of any such corporation or corporations to which the same shall be conveyed, in the names and for the use and benefit of said minors."

Further, in view of the proposed corporate organization, steps were taken by the parties in interest to ascertain the value of the partnership assets, and the relative interest of each shareholder. For this purpose an agreement was entered into on the first day of April, 1865, between all the parties, Fanny Sprague signing individually and as administratrix of Amasa Sprague; Mary Sprague signing individually and as administratrix of William Sprague and as guardian of her grandchildren; and the other parties signing in their own behalf: by which it was agreed that John A. Gardner and Benjamin F. Thurston, the former of whom had been counsel for Amasa Sprague and William Sprague, and the latter counsel of Mary and Byron Sprague, should be, and they were, appointed referees to examine into the entire assets and property of the firm, and to ascertain the value thereof, and each party's interest therein, and should make report of the result. The referees accordingly made such examination, and made their report on the first day of July, 1865, by which they reported and found that the cash value of the entire estate, exclusive of the Quidnick factory (which was estimated by itself, and was transferred to a separate corporation), was $6,732,906 69
That there were liabilities to amount of 2,871,921 79
Leaving the net value of the estate equal to . . 3,860,984 90

And after adjusting the accounts of the parties they found—

Mary Sprague's interest was	$624,984 69
Fanny Sprague's interest	625,511 69
William Sprague's interest	978,867 42
Amasa Sprague's interest	978,867 42
Mary Sprague, guardian of the children of Susan Hoyt	652,753 68
Due to Mary Sprague, as administratrix of her husband, on account of a dividend	164,250 26
Making a total of	$4,025,235 16

This amount formed the capital stock of the corporation subsequently organized, and was represented by the nominal capital of $1,000,000, making each share equal to over $402. The proportions of William and Amasa were larger than the others, because they had purchased the share of Byron.

The referees also found due from the firm to Mary Sprague, as guardian of the Hoyt children, the sum of $188,333.33, explained to have been a balance credited to them to equal what the two families in Rhode Island had drawn out of the concern for current expenses.

The Quidnick property, which, as before stated, was kept separate from the rest on account of other persons being interested therein, was appraised in the same way as the A. & W. Sprague property, for the purpose of being transferred to a distinct corporation. The interest of the Hoyt children therein was appraised at $63,353.23.

The appraisement having been completed, Mary Sprague, as guardian of the Hoyt children, on the 5th of August, 1865, after advertising her intent so to do, presented her bond to the Probate Court of Warwick for approval, as required by the joint resolution of March 9, 1863, and prayed authority from the court to transfer the interest of her wards to the A. & W. Sprague Manufacturing Company, as authorized by said resolution; and also prayed like authority to transfer the interest of the minors in the Quidnick property to the Quidnick Manufacturing Company.

A decree was made granting the prayers of the petition and conferring the powers desired.

Thereupon, on the ninth day of August, 1865, all the parties in interest joined in a conveyance of the entire partnership property of the firm of A. & W. Sprague to the A. & W. Sprague Manufacturing Company; and the property of the Quidnick firm to the Quidnick Manufacturing Company; and each party became entitled to their several proportions of the shares of capital stock in those companies respectively. In executing the deed of conveyance Mary Sprague signed in her individual capacity, as administratrix of her husband's estate, and as guardian of the Hoyt children.

In the August Term, 1866, of the Probate Court of Warwick, appraisers were appointed to take an inventory and appraisement of the property of the several wards of Mary Sprague in her hands, and they performed their duty, and said inventories, verified by the oath of Mary Sprague, were filed and recorded, after being passed upon by the court. They amounted to the sum of $251,447.08 each. That of William S. Hoyt was composed of the following items, namely: —

122 shares Nat. B'k of Commerce	$6,222 00
1 U. S. 6-per-cent bond	108 09
2 N. Y., Prov., & Boston R. R. bond, $950	1,900 00
439 shares A. & W. Sprague M'f' Co., 402, 5,225 . .	176,707 82
123 shares Quidnick Co. stock, 155, 213	19,091 20
Cash	334 23
	$204,363 75
Dividend due from A. & W. Sprague as cash, March 31, 1865, with interest from that date	47,083 33
	$251,447 08

The others were nearly identical with this.

The dividend of $47,083.33 was William S. Hoyt's one-fourth part of the sum of $188,333.33 awarded to the Hoyt children as an offset to the sums drawn out by the Rhode Island families for current expenses.

At the same term Mary Sprague presented an account as guardian of each ward, which being verified, and due notice having been published, was received and allowed by the court, and ordered to be recorded.

Sarah Hoyt having now arrived at full age, received the amount of her interest and gave an acquittance for the same.

At the same term of the court, on the petition of Mary Sprague, and her resignation of the guardianship of the three remaining minors, and on the written application of Edwin Hoyt, and due notice given, Mary Sprague was discharged from the guardianship, and William Sprague was appointed guardian in her stead. The same appraisers were appointed to make an inventory and appraisement of the property of each ward in the hands of William Sprague, guardian; and such inventory and appraisement were duly made, filed, and recorded; showing that the estate of William S. Hoyt amounted, on the first day of September, 1866, to the sum of $255,885.04, consisting of the items before mentioned, with the addition of another dividend of the companies.

The estate of Susan S. Hoyt amounted to about the same sum.

Susan S. Hoyt came of age in October, 1866, and William S. Hoyt in January, 1868; and Susan married Charles G. Franklyn in 1869.

The evidence in the case exhibits several annual accounts rendered by William Sprague, as guardian to the complainant W. S. Hoyt, after he came of age, in 1870, 1871, 1872, and 1873. These accounts show on the credit side the money due and accruing to the complainant, including the sum of $47,083.33 before mentioned, and the dividends made from time to time on the stocks of the A. & W. Sprague Manufacturing Company, the Quidnick Manufacturing Company, and on the bank and other stocks in the guardian's hands. On the debit side they show the moneys drawn by and paid to the complainant, amounting, from the date of Mr. Sprague's appointment as guardian in 1866, to Oct. 31, 1870, to the sum of $5,282.45:—

thence to Oct., 1871	$8,606 72
to Oct., 1872	18,500 00
to Oct., 1873	5,000 00

Leaving a balance still in the guardian's hands of $63,905.18, besides the stocks and bonds forming the corpus of the estate in ward.

William S. Hoyt, some time in 1873, received his stocks and interest in the Quidnick Company, and makes no complaint in regard to the same.

A number of letters of the complainant, asking for, and acknowledging the receipt of, money from his guardian, after coming of age, were put in evidence. One of these, dated Nov. 9, 1870, was directed to Mr. Greene, book-keeper of the A. & W. Sprague Manufacturing Company, asking for a memorandum of the bank stock, shares, and whatever there might be belonging to him. In his testimony the complainant states that this information was furnished to him. A similar statement had been furnished to Mrs. Francklyn in March of the same year; and annual accounts were rendered to her from October, 1869, to October, 1873.

In the fall of 1873, Hoyt, Spragues, & Co. and the A. & W. Sprague Manufacturing Company suspended payment, and the latter, by deed of assignment dated Nov. 1, 1873, assigned to Zechariah Chafee all its property, in trust for the benefit of creditors, — in which deed Amasa and William Sprague, and Fanny and Mary Sprague also joined. In April, 1874, a more full assignment was made.

The bills in this case were filed in June and July, 1875, and their general object has already been stated. They respectively state most of the facts of which the foregoing is an outline; but interlarded with reiterated charges of fraudulent design and concealment on the part of the Spragues: whereby, as is alleged, the complainants were kept in ignorance of their rights and of the state of their property, and the transformations under which it went, until shortly before the filing of the bill.

The defendants severally answered the bills, denying all fraudulent motives and any intentional concealment; averring that they acted according to their best judgment as to what was for the interest of all the parties interested in the estate; insisting upon the legal validity of their proceedings respectively, and especially of the transfer of the minors' interest to the corporations; setting up the laches and acquiescence of the complainants; and pleading the Statute of Limitations to the relief sought by the bill.

The first question to be determined is, the nature of the

complainant's rights, with regard to the partnership effects of A. & W. Sprague in 1865, at the time when the property was transferred to the A. & W. Sprague Mauufacturing Company.

At the death of William Sprague, Sen., in 1856, there is no doubt that each party in interest was entitled to call for a liquidation and settlement of the partnership affairs and a division of the surplus property, and had a lien on the entire property and effects for that purpose. In the real estate and corporal chattels they were tenants in common with the surviving partners, and over the entire property including the credits and other assets they had the lien referred to, which they had a right to enforce at once if the surviving partners refused to make a settlement. These partners had the right of possession, and, in the choses in action, the right of property, to enable them to settle up the concern. But these rights of survivorship were subordinate to the lien of those beneficially interested, who thereby had a right to enforce the due appropriation of the partnership effects.

But who were the parties beneficially interested in this case? Primarily, the personal representatives of Amasa Sprague, Sen., and William Sprague, Sen.; namely, the two widows, Fanny Sprague and Mary Sprague, administratrixes respectively of the estates of Amasa and William. The ultimate beneficiaries could only reach the property through them. If they abused their trust they would be liable to their respective *cestuis que trust.* They had the power, if they saw fit, unless restrained by their beneficiaries, to allow the estates of their deceased intestates to be continued in the business of the partnership; and if it was continued by their allowance and consent, the property became liable to the partnership debts subsequently incurred as well as to prior debts; but with this qualification, that the property which remained unchanged was still subject to the partnership lien in preference to after-incurred debts; whilst new property which, in the course of business, took the place of the old, was not subject to said lien in preference to such debts.

This seems to be the result of the cases, though they are apparently somewhat in conflict. A cursory reading of the opinion in *Skipp* v. *Harwood* (1747), (2 Swans. 586), and Lord

Hardwicke's opinion in the same case on appeal, *West* v. *Skipp* (1 Ves. Sen. 239), and the opinions in *Stocken* v. *Dawson* (9 Beav. 239), and same case on appeal (17 Law J. Ch. 282), would lead to the conclusion that the executor's lien in such cases attaches to the whole property, as well that newly acquired as that which remains of what was in existence at the testator's or intestate's decease. But this is inconsistent with the decisions in *Nerot* v. *Burnand* (4 Russ. 247) and *Payne* v. *Hornby* (25 Beav. 280; S. C. 4 Jur. N. S. 446), which hold that where the business is carried on with the consent of the outgoing partner, or the representative of the deceased partner, debts incurred during that period have a preference over the partnership lien upon all newly acquired property. A comparison of the cases will show that the rule laid down by Lords Hardwicke and Cottenham in *West* v. *Skipp* and *Stocken* v. *Dawson* was applied by them to cases in which the property of the retiring or deceased partner was used in the business against the will, or without the consent, of the persons entitled thereto. The law is laid down with much accuracy in the last edition of Lindley on Partnership, pp. 700–702, where it is said: "Whilst the partnership lasts, the lien attaches to everything that can be considered partnership property, and is not therefore lost by the substitution of new stock for old. Further, on the death or bankruptcy of a partner, his lien continues in favor of his representatives or assignees, and does not terminate until his share has been ascertained and provided for by the other partners. But after the partnership is dissolved, the lien is confined to what was partnership property at the time of the dissolution, and does not extend to what may have been subsequently acquired by the persons who continue to carry on the business."

Sir John Romilly, in giving judgment in *Payne* v. *Hornby*, cited above, after admitting that, by a mortgage of his stock in trade, a man might bind after-acquired property (as to which see *Holroyd* v. *Marshall* (10 H. L. Cas. 191), said: "But on the death of a partner the case is altogether different. There is, as Lord Eldon very accurately expresses it, 'a *quasi* lien;' there is, in point of fact, only a right to the specific property. The executors of the deceased partner are joint tenants with

the surviving partners, and accordingly they are entitled to require the surviving partners to do one of two things, — either to wind up the partnership business at once, or to fix the value of the testator's property and secure payment of the amount. . . . If the executors do not apply for a receiver, but simply file a bill for the winding up of the partnership, I apprehend that the new stock which has been acquired during the time that the business has been carried on by the surviving partner belongs, in the first place, to the creditors who have been created by such subsequent dealings, and not to the creditors of the old partnership; and that it is the duty of the executors, if they wish to prevent any dealings with the stock, to come at once to this court for the appointment of a receiver; otherwise they, in fact, sanction the commission of a fraud, by leading the subsequent creditors to believe that they are dealing with a person who is liable out of his stock in trade to discharge their debts." 4 Jur. N. S. 446.

These remarks of the Master of the Rolls have respect to the rights of creditors. As between the surviving partners themselves and the representatives of the deceased partner, the lien of the latter will extend to after-acquired property resulting from the employment of the partnership stock, so as to entitle them, at their option, either to demand a share of the profits, or interest on the value of the decedent's share at the time of his death; unless the transactions between them have been such as to indicate a sale of the deceased partner's share to the survivors. A sale, however, can hardly be inferred where no steps have been taken to ascertain the value of the share.

Recurring now to the circumstances of the case before us and the proceedings of the parties, we find that the legal representatives of the deceased partners, and all the beneficiaries of the two estates who were in law capable of acting, entirely acquiesced in, and consented to, the continued employment of the partnership property in the business of the partnership subsequently carried on by the surviving partners; and this state of things continued for the eight or nine years that intervened between the death of William Sprague, Sen., and the transfer of the property to the corporations. And as to the share of the Hoyt children, it was not only consented

to by Mary Sprague as administratrix of her deceased husband's estate, but as guardian of the property of the said children.

It seems to have been an understood thing between all the parties, from the beginning, that, without any formal settlement of the estates of Amasa and William Sprague, Sen., the several beneficiaries entitled to distribution should be and were considered as interested in the common partnership property in the proportional amount of their beneficial interest. The active partners represented their own respective shares. Mary Sprague as administratrix and as guardian of the Hoyt children represented her own share and theirs. It is objected to her that she omitted to file any inventory or account; but as there was no difficulty or dispute between the parties in interest as to the extent of the several shares, there was no imperative necessity of presenting accounts to the Probate Court as long as it was deemed expedient to continue all the property in the joint business. An inventory could settle nothing, because the property in which all were equally interested was constantly changing, and an account would have had no practical value, because no immediate settlement of the estate was proposed. The cardinal question, so far as these cases are concerned, was that which related to continuing the shares of the minors in the concern, and keeping the property together. Conceding that to have been the proper course to take, the omission on the part of Mary Sprague to exhibit the accounts prescribed by statute cannot be regarded in the same light as it would have been if she had had possession of the property and was devoting it to her own use. It may have been unwise, but, under the circumstances, it can furnish no evidence of want of good faith, or a desire to do other than the best that could be done for the interests of her grandchildren and wards.

And as to the question of fraud, we may at once state, that we entirely agree with the court below, that the case furnishes no evidence to sustain that charge, either as against Mary Sprague or any of the other parties concerned. They may have judged unwisely, but we see no ground for believing that they were actuated by any desire to cheat or defraud the children of Susan Hoyt out of anything that justly belonged to them.

We are sure that such a thought could not be attributed to their grandmother, and we have no evidence to believe that it was ever entertained by Amasa Sprague or William Sprague. We must regard the decision of Mrs. Sprague, and of Edwin Hoyt, the father, to keep the property of the children in the concern, as an error of judgment only, rather than as the result of any design or intent to defraud. We may well conceive that the supposed wishes of William Sprague, Sen., who by his energy and talent had created the estate, and who had persistently kept it together as a common property for the equal benefit of his brother's family and himself, had great weight with Mrs. Sprague and her son-in-law, as well as with the surviving partners, in leading them to adopt the conclusion they did. And for many years the result seemed to justify the conclusion to which they came.

But whatever may have been the responsibility which Mary Sprague, as administratrix and guardian assumed, it cannot be doubted that she had the power to keep the property in the business, for it was subject to her disposal. And as it was kept in the business by her consent and allowance, she ceased to have a lien upon the property as against subsequent creditors of the concern. And, as she in her representative capacity ceased to have such lien, it is difficult to see how the minors themselves, when they arrived at full age, could have any such lien, whatever remedy they may have had against Mary Sprague. If the ultimate beneficiaries of a deceased partner's estate could thus revive a lien which has become extinguished as against creditors, there would be little safety in dealing with commercial partnerships, in which any partner has ever died.

This consideration is conclusive against the claim made by the bills to be paid out of the assets in the hands of Chafee, the trustee, in preference to, or even *pari passu* with, the creditors of the corporation. For where the representative of a deceased partner allows the interest of his decedent to be used in the business by the surviving partner, and thereby loses his lien upon the partnership property, he does not thereby become a creditor of the new firm, and cannot come into concourse with the creditors thereof; but the property of the firm is first subject to the claims of such creditors, and after they are satisfied

the representative's right to have an account against the surviving partner remains as before.

But whilst the rights of creditors are thus protected against the lien of a deceased partner's representatives, who have consented to the continuance of the business without a settlement, the beneficiaries standing behind those representatives are entitled to call them to an account for the manner in which they have dealt with the estate. And where, as in this case, they depart from the ordinary mode prescribed by law, and expose the property to the hazards of trade, they run the risk of making themselves answerable for any loss that may occur. In the present case, however, we have no evidence that loss occurred during the period under consideration. The estimated cash value of the minors' share of the property on the 31st of March, 1865, as appeared by the appraisement then made, was $652,753 68

Allowance to offset family expenses of the other parties 188,333 33

Interest in Quidnick property, including E. Hoyt's curtesy 116,112 93

Total $957,206 94

As gold was then 150, the specie value of this total would be $638,137.96. No satisfactory proof has been adduced to show that this amount was not fully equal to what the interest of the minors ought to have been in view of the value of the estate in 1856, at the time of William Sprague, Sen.'s, decease.

Up to the time of organizing the corporations, therefore, and the transfer of the property thereto, we have no evidence that any loss, or diminution of value, had occurred.

Still, if the matter stood there, the defendants, or at least Mary Sprague, might be called upon to render an account, and to show by affirmative proof that all the property which came into her hands as administratrix, or guardian, for the use and benefit of her daughter Susan's children, was forthcoming and ready to be paid over to them. It is necessary, therefore, to take into view what occurred in 1865 and afterwards, in relation to the disposition made of the property to the corporations before referred to, and to the conduct of the complainants after

coming of age, in order to determine whether they are entitled to any portion of the relief sought by the bills.

It is contended by the defendants that the authority given to Mary Sprague, as guardian of the Hoyt children, by the joint resolution of 1863, to transfer all the property of her wards to the corporations indicated, was a complete justification for her acts in that behalf; and releases her from all further obligation except that of accounting for the shares of capital stock received therefor and any dividends accruing thereon whilst in her possession.

It is contended by the defendants, secondly, that the complainants, after coming of age, had so long acquiesced in the arrangements made in 1865, before bringing suit or taking any steps to set them aside, that they are now precluded by their own laches and by the lapse of time from having the relief which they seek.

As to the first point, it seems to be beyond doubt, that if the legislature had the power to pass the resolution referred to, it was a complete authority and justification for the conveyance by Mrs. Sprague of the interests of her wards to the corporations mentioned. The resolution itself is sufficiently broad to give the requisite authority. The question is as to the legislative power.

With regard to the general legislative power of a State to act upon persons and property within the limits of its own territory there can be no doubt. Mr. Justice Story lays down three fundamental rules on the subject of private international law, the first of which is expressed thus: "I. The first and most general maxim or proposition is that which has been already adverted to, that every nation possesses an exclusive sovereignty and jurisdiction within its own territory." And he adds, "The direct consequence of this rule is, that the laws of every State affect and bind directly all property, whether real or personal, within its territory, and all persons who are resident within it, whether natural-born subjects or aliens, and also all contracts made and acts done within it." The second rule declares that no State or nation can, by its laws, directly affect or bind property out of its own territory, or persons not resident therein. The third is, that whatever force and obliga-

tion the laws of one country have in another, depend solely upon the laws of the latter, that is, upon the comity exercised by it. Story, Conflict of Laws, sects. 18–23.

One of the ordinary rules of comity exercised by some European States is, to acknowledge the authority and power of foreign guardians, that is, guardians of minors and others appointed under the laws of their domicile in other States. But this rule of comity does not prevail to the same extent in England and the United States. In regard to real estate it is entirely disallowed; and is rarely admitted in regard to personal property. Justice Story, speaking of a decision which favored the exterritorial power of a guardian in reference to personal property, says: "It has certainly not received any sanction in America, in the States acting under the jurisprudence of the common law. The rights and powers of guardians are considered as strictly local; and not as entitling them to exercise any authority over the person or personal property of their wards in other States, upon the same general reasoning and policy which have circumscribed the rights and authorities of executors and administrators." Story, Confl. Laws, sects. 499, 504, 504 *a*. And see Wharton, Confl. Laws, sects. 259–268, 2d ed.; 3 Burge, Colon. and For. Laws, 1011. And some of those foreign jurists who contend most strongly for the general application of the ward's *lex domicilii* admit that, when it comes to the alienation of foreign assets, an exception is to be made in favor of the jurisdiction within which the property is situate, for the reason that this concerns the ward's property, and not his person. Wharton, sects. 267, 268.

But whilst the English and American law require a guardianship where the property is situated, it is conceded, that, in the due exercise of comity, preference would ordinarily be given to the person already clothed with the authority of guardian in the minor's own country. Phillimore, vol. iv. 381; Wharton, sect. 266. In the case before us it does not appear that the minors had any other guardian in New York than their natural guardian, Edwin Hoyt, who applied for the appointment of Mary Sprague as guardian of their estate in Rhode Island.

As the question before us is one of power and not of comity,

we think there can be no doubt that the legislature of Rhode Island, where the property was situate, had power, first, to pass laws for the appointment of guardians of the property of non-resident infants, situate in that State; and, secondly, it had power to prescribe the manner in which such guardians shall perform their duties as regards the care, management, investment, and disposal of such property; and that this power is as full and complete as where the minors are domiciled in the State.

Not only did the power exist, but we find that it was exercised. The laws of Rhode Island gave explicit power to the Probate Court to appoint a guardian of the property of non-resident infants. The act of Oct. 31, 1844, declared that "the courts of probate of the several towns are hereby authorized and empowered to appoint guardians, when occasion shall require, over the property or estate of persons who reside out of the State and possess property therein." The previous act of Jan. 6, 1837, had authorized the same courts, in case of incapacity of parents of any minors, or for other sufficient cause, to appoint a guardian of the property of such minors, without connecting therewith the guardianship of such minors' persons.

There is no force in the objection made to these laws, that they give chancery powers to the Probate Court, contrary, as contended, to sect. 2 of art. 10 of the Constitution of Rhode Island adopted in 1843, which says: "Chancery powers may be conferred on the Supreme Court, but on no other court to any greater extent than is now provided by law." The answer to this objection is obvious. The appointment of guardians is not, and never has been, peculiarly a chancery power. Guardians at common law became such by their relation to the minor, without any judicial appointment. Guardians were also appointed by testament by the father of any minor from time immemorial in the province of York, and on failure to thus appoint, the ordinary had the power of appointment. Swinburne on Wills, 282. In this country the power to appoint guardians and to pass upon their accounts has generally by statute been conferred upon the probate courts. In Rhode Island the power was exercised by these courts long before the Constitution of 1843 was adopted.

Assuming, then, that the Probate Court had the power to make the appointment, we have been unable to see anything informal or improper in the appointment of Mary Sprague as the guardian of her infant grandchildren. The petition for her appointment was made by the most suitable persons in the world, — their father, Edwin Hoyt, and Byron Sprague, their mother's only brother.

It is true, as suggested, that the duties of Mary Sprague as administratrix might clash with her duties as guardian; but this was not a necessary consequence. The same person is often appointed executor of a will and guardian of the testator's children. It is seldom that any practical difficulty arises from the joinder of the two capacities. We do not perceive that their joinder in the present case had, or was likely to have, any deleterious effect upon the interests of the infants concerned. At all events, it did not avoid or vitiate the appointment.

The guardian having been duly appointed, and no deterioration of the estate being shown prior to the conveyance to the corporations, the next inquiry relates to the authority for making such conveyance, given by the joint resolution of 1863. As already intimated, it cannot be doubted that the legislative power extends to the regulation of the investments and the management of minors' estates by their guardians. The legislature certainly might, if it saw fit, pass a general law authorizing a guardian to invest the property of his ward in the capital stock of a corporation engaged in manufacturing, trading, or financial operations, or in a particular class of operations, as banking, insurance, or any other that might be specified. Usually, such authority, if given, would be required to be exercised under the allowance and supervision of a court; but that would be a matter of legislative discretion. That such an authority could be conferred by law there can be no doubt. Analogous powers have been conferred from time immemorial.

But it is objected that the resolution of March 9, 1863, under which the guardian in this case derived her authority to make the investment under consideration, was not a legislative, but a judicial act, and beyond the legislative power.

The only provision in the Constitution of Rhode Island which

bears upon this question is the usual one which distributes the powers of government into three departments, legislative, executive, and judicial, and assigns to each the powers appropriate to it. Thus, "The legislative power shall be vested in two Houses," &c. "The judicial power shall be vested in one Supreme Court, and in such inferior courts as the General Assembly may, from time to time, ordain and establish."

The question of the power of a legislature, when not restrained by a specific constitutional provision, to pass special laws, has been much mooted in the courts of this country; and it would subserve no useful purpose to go over the whole ground of controversy on this occasion. Suffice it to say, that laws of this character, for the purpose of healing defects, giving relief, aid, and authority in cases beyond the force of existing law, have been frequently passed in almost every State in the Union, and have received the sanction not only of this court, but of other courts of high authority. The exercise of this power has been most conspicuous in that class of cases in which the legislature has been called upon to act as *parens patriæ* on behalf of lunatics, minors, and other incapacitated persons. Laws authorizing the sale of the estates of such persons have frequently been passed, and have been upheld as fairly within the legislative power. The passage of such laws is not the exercise of judicial power, although by general laws the discretion to pass upon such cases might be confided to the courts. But when it is not confided to the courts, the power exercised is of a legislative character, the legislature making a law for the particular case. In some modern constitutions the exercise of this power has been prohibited to the legislative department. But where not so prohibited, and where it has never been authoritatively condemned in the jurisprudence of the State, we cannot deny to the legislature the right to exercise it in those cases in which it has been accustomed to be exercised, amongst which we think the present case may be fairly reckoned. Such laws are not judgments upon any person's rights, but they confer powers upon the exercise of which judgment may afterwards be given.

The only cases in Rhode Island decided since the adoption of the Constitution of 1843, which have been cited as having a

bearing on the subject, are *Taylor* v. *Place*, 4 R. I. 324, and *Thurston* v. *Thurston*, 6 id. 296. The general conclusion to be derived from these cases is favorable to the view we have taken.

In the first of these cases, the legislature having passed a vote for opening a judgment, allowing new affidavits to be filed on the ground of accident and mistake, setting aside a verdict and granting a new trial, the court very properly held this to be an exercise of judicial power, and declared the vote to be void. But they distinguished the case from those laws passed to confer special powers upon executors, &c.; as in *Watkins* v. *Holman* (16 Pet. 25), where an act authorizing an administratrix residing in another State to sell land in Alabama for the purpose of paying debts was held by this court to be within the legislative power and valid. In the other case cited (*Thurston* v. *Thurston*), the court held that it was beyond the power of the Court of Chancery in that particular case to decree a sale of infants' lands; that the power, if possessed by any court, was vested by statute in the Probate Court; but added: "If a case should arise within the spirit, though not within the letter, of such or a similar statute, a special authority to a trustee to convert the real estate of his infant, lunatic, or otherwise incapable *cestui*, would seem to partake, as intimated by this court in *Taylor* v. *Place*, more of a legislative than of a judicial character, and would be, having been long exercised and not prohibited by the Constitution, within the constitutional competence of the General Assembly. *Watkins* v. *Holman*, 16 Pet. 25; *Davis* v. *Johonnot*, 7 Met. 388; *Snowhill* v. *Snowhill*, 2 Green, Ch. 20; *Norris* v. *Clymer*, 2 Barr, 277; *Spotswood* v. *Pendleton*, 4 Call, 514; *Dorsey* v. *Gilbert*, 11 Gill & Johns. 87." This is certainly a very clear intimation of the constitutionality of the class of laws to which that now under consideration belongs.

But another objection made to the validity of the joint resolution is that it was not in proper form, in not being preceded by the proper enacting clause. The Constitution declares that the style of the laws shall be: "It is enacted by the General Assembly as follows." If this requirement is anything more than directory, it cannot be decreed to apply to that species of

enactments which are usually denominated joint resolutions, and which are often used to express the legislative will in cases not requiring a general law. The practice of the Congress of the United States, and of almost every legislative body in the country, may be adduced to show that a resolution of the nature now under consideration could not have been within the intent of the provision referred to.

It is unnecessary to enter upon a particular review of the proceedings taken by the parties to effect a transfer of the partnership estate to the corporations chartered for that purpose. We have given them our careful attention, and are satisfied that they were substantially regular. We have no doubt of the guardian's power to submit to referees the ascertainment of the value of the minors' interest in the property; nor of the binding effect of the award made by the referees. Our conclusion is that the guardian, Mrs. Mary Sprague, had full power and authority to invest the said interest in the capital stocks of the corporations referred to; and that having done so, she was no further answerable therefor, but only answerable for the shares of capital stock and the dividends realized thereon, respecting which we do not understand that any complaint is made.

But aside from the legality and binding effect of the proceedings for investing the minors' interest, as here stated, the acquiescence of the complainants, after they came of age, effectually precludes them from obtaining the relief sought by their respective bills. The bills were not filed until June and July, 1875, in the one case nearly nine years, and in the other more than seven years after the minors became *sui juris*, and could have known, if they did not know, the exact position and history of their property. Notwithstanding all the asseverations to the contrary, the evidence fails to show that they were not allowed every opportunity of which they chose to avail themselves of obtaining this knowledge. And the fact is clearly demonstrated that they did have sufficient knowledge to leave them without any excuse for lying by and giving no sign of dissatisfaction. For several years they received regular annual accounts. These accounts showed the character of the property, and in what it consisted. It further appears that in 1870

each of the complainants received from the book-keeper in Rhode Island a list of all the stocks and securities in which they were respectively interested. It also appears that they accepted the stock of the Quidnick Company, and they make no complaint of that part of the settlement.

Without further discussion, it suffices to say, that the complainants came into the court too late to obtain relief, even if when they came of age they could have justly complained of the conversion of their property into the stock of the corporations. In such cases, it is not merely a question as to what information respecting their rights parties do actually obtain; but as to what information they might have obtained had they used the means and opportunities directly at their command. Others, acting in good faith, also have rights; the world must move; and it is the interest of the community that controversies should have an end.

Decrees affirmed.

WILLIAMS v. LOUISIANA.

In a suit brought, in one of her courts, by the State of Louisiana, seeking to restrain payment on the bonds issued to the New Orleans, Mobile, and Chattanooga Railroad Company, under an act of the legislature approved April 20, 1871, and praying for relief, upon the ground that the act was in violation of the constitutional amendment of 1870, which declares "that, prior to the first day of January, 1890, the debt of the State shall not be so increased as to exceed twenty-five millions of dollars," which limit, it was claimed, had been attained before the passage of the act, a holder of some of the bonds, who was permitted to intervene, set up that they were issued in discharge and release of valid and then subsisting obligations of the State, which, prior to the adoption of the amendment, had been created under her legislation. *Held*, that this court has jurisdiction to determine whether the amendment, as construed by the court below and applied to the facts of the case, impairs the obligation of a contract. *Held*, further, that the act is in conflict with that amendment, inasmuch as it authorized the creation of a new debt on a new consideration, in excess of the prescribed amount, and that the bonds are void.

ERROR to the Supreme Court of the State of Louisiana.

The facts are stated in the opinion of the court.

Mr. Simon Sterne and *Mr. George W. Biddle*, with whom were *Mr. A. Sydney Biddle* and *Mr. James Lowndes*, for the plaintiff in error.

Mr. Gustave A. Breaux and *Mr. James Lingan* for the defendant in error.

MR. JUSTICE MILLER delivered the opinion of the court.

A suit was brought by the Attorney-General of Louisiana in the name of the State, in the Superior Court of the District for the Parish of New Orleans against Charles Clinton, State auditor, and Antoine Dubuclet, State treasurer. The petition enumerated a great number of claims against the State which it declared to be illegal and void, and which it was feared the auditor would allow, and the treasurer pay, against which action the petition prayed for an injunction. Among these claims, the only one which demands our attention was one for $2,500,000 of State bonds issued under the act of the legislature of April 20, 1871, entitled "An Act to relieve the State from its obligation to guarantee the second-mortgage bonds of the New Orleans, Mobile, and Chattanooga Railroad Company." While there were several grounds of objection stated in the petition, the only one which concerns us is the allegation that the issue of these bonds was an attempt to create a debt of $2,500,000, when the limit to the State debt of $25,000,000, as fixed by the amendment to the State Constitution of 1870, had already been exceeded. In this suit the New Orleans, Mobile, and Texas Railroad Company, successors to the New Orleans, Mobile, and Chattanooga Railroad Company intervened, and the temporary injunction was dissolved.

On appeal to the Supreme Court the order dissolving the injunction was reversed, and when the case came back to the court of original jurisdiction for further proceedings, Williams and Guion were permitted to intervene for their interest as holders of three of the bonds of $1,000 each, the payment of which was sought to be enjoined in the suit.

The Superior Court decreed the bonds to be void, and perpetually enjoined the treasurer from paying them on their interest coupons, and on appeal to the Supreme Court that decree was affirmed. It is this final judgment of the Supreme Court

of the State that the present writ of error sued out by Williams and Guion seeks to review.

The reason why the State court held these bonds void is that by an amendment of the Constitution of the State, adopted in 1870, no debt should be thereafter created which, added to the debt of the State then existing, would swell the total amount above $25,000,000; and that amount had been reached before the issue of the bonds in question and before the act of the legislature under which they were issued had been passed.

Counsel for defendants in error insist that the writ of error should be dismissed for want of jurisdiction.

They say that the suit is one in the courts of their own State, to which the State itself is a party plaintiff, against its own officers, and the decision rested entirely on the construction of the Constitution and laws of the State, and that no question of Federal law is involved in it. If this be strictly true, their contention should be sustained.

In answer to this, it is said that the bonds held by the intervenors were founded on an obligation which existed prior to the constitutional amendment, and did not, therefore, add to the debt which existed when that amendment was adopted. This is denied by the counsel for the State, and upon the solution of this question the whole case depends, both as to its merits and as to the jurisdiction of this court. For it is insisted by plaintiffs in error that if their contract existed in effect before the amendment, the amendment as construed by the State court impairs the obligation of that contract, and this court can review that question; while if the bonds constitute a new and independent contract, the constitutional provision was properly applied to them and the judgment is right. As this is the question we are to decide, and as it was raised and insisted on by the plaintiffs in error in the court below, we think this court has jurisdiction.

The bonds in question were, as we have already said, issued under an act of the Louisiana legislature, approved April 20, 1871, which was after the constitutional amendment had become operative. That amendment, which went into effect in December, 1870, declares "that prior to the first day of Janu

ary, 1890, the State debt shall not be so increased as to exceed twenty-five millions of dollars."

That the State debt already exceeded that sum when the bonds were issued, and, indeed, when the act was passed under which they were so issued, is not denied. But, as already stated, the effect attributed to these facts is denied, on the ground that they were issued in lieu of and in extinguishment of an obligation of the State existing when the constitutional amendment was adopted.

To determine the soundness of this proposition, it is necessary to examine the statute which authorized their issue, and the nature of the supposed obligation on which the later transaction is said to be founded. The statute reads as follows, and is here given in full: —

"An Act to relieve the State from its obligation to guarantee the second-mortgage bonds of the New Orleans, Mobile, and Chattanooga Railroad Company, under an act of the General Assembly approved February 21, 1870, by subscription on the part of the State to the capital stock of said corporation, and to regulate the conditions of such subscription, and to secure the construction of the road of said corporation from Vermilionville to Shreveport.

"SECT. 1. (*a.*) Be it enacted by the Senate and House of Representatives in General Assembly convened, that the governor of this State be and is hereby authorized to subscribe for twenty-five thousand shares of $100 each of the capital stock of said corporation on behalf of this State, and to receive the certificates of stock therefor as payment shall be made for the same, which certificates shall be deposited by him in the office of the treasurer of this State, and shall not be assignable or transferable except by authority of the General Assembly.

"(*b.*) And be it further enacted, &c., that whereas the subscription for stock and the issue of bonds therefor herein provided are intended to extinguish the obligation of the State to indorse or guarantee the second-mortgage bonds of said corporation, under the act of the General Assembly relative to said corporation, approved February 21, 1870, and as a discharge of either party from all obligations for the issue, indorsement, guarantee, and security of said mortgage bonds, as provided in the fourth section of said act; the said corporation shall be required, at or before the com-

plete issue of said bonds, to file with the secretary of state a full release and acquittance of the obligations of the State so created to guarantee said mortgage bonds, and for which the provisions of this act are designed as a substitute and discharge; and the said corporation shall, by its express agreement made and entered into by the vote of its board of directors, and attested by its seal and the signature of its secretary, obligate itself to commence that part of its railroad from Vermilionville to Shreveport within six months, and to complete the same within the time limited therefor in said act of the General Assembly: *Provided*, that the said corporation may purchase from this State the said shares of stock at their par value, at any time prior to the maturity of the bonds issued therefor, and may pay for the same in lawful money or in any of the bonds of this State at their par value.

"SECT. 2. Be it further enacted, &c., that for the payment of said subscription bonds of this State shall be issued, signed by the governor and secretary of state, and sealed with the seal of the State, payable not less than thirty-five, nor more than forty years from their date, with interest at the rate of eight per cent per annum, payable semi-annually in the city of New York, on the first days of January and July of each year, for which interest coupons bearing a fac-simile of the signature of the treasurer of the State shall be attached to the bonds, and annually from and after the issuing of the said bonds or any part thereof, there shall be imposed for each fiscal year a State tax of one mill on each dollar of the valuation, for each year, of the real and personal property in the State, subject to taxation, which tax shall be assessed, levied, and collected in current moneys by the annual assessment and collection of taxes for each year, in the manner prescribed by law for the collection of other taxes, and the moneys derived therefrom shall immediately on collection be paid into the treasury of this State as a distinct fund, and kept as a separate account; and such moneys and all moneys received from said company for dividends on said stock shall be applied in each and every year, first to the payment of the interest as it shall accrue on the said bonds, and the balance, in each year, shall be applied to the purchase of said bonds; such tax shall continue to be so assessed, levied, and collected in each and every year until all the interest and principal of said bonds, which shall from time to time remain outstanding, shall be fully paid; and all bonds and coupons so purchased and paid, shall be immediately cancelled by the said treasurer.

"SECT. 3. Be it further enacted, &c., that from and after the sub-

scription aforesaid and the issue of the certificates of stock, and during the time the State shall own the same, the State shall be represented at the corporate meetings of the stockholders; and in the board of directors to be chosen by the other stockholders under the charter of their incorporation by the governor of the State for the time being, or by his proxy or by another director to be designated by the governor, whose duty it shall be to attend all the meetings, and perform all the duties incident to the office of directors, but that the directors thus appointed shall not vote in the elections of the board of directors provided for in the act of incorporation."

The act of February, 1870, here referred to is an act of many sections and subsections for the benefit of the New Orleans, Mobile, and Chattanooga Railroad Company, giving it increased privileges in the city of New Orleans, authorizing extensions of its projected road, and the unlimited issue of its own bonds.

The fourth section, in addition to this grant of the unlimited right to issue its own bonds authorizes the company to construct and maintain a road from any point on the main line of its road in the parish of St. Martin or Lafayette northwardly to Shreveport *via* Alexandria; and also from Iberville on the main line to the Mississippi at any point in the parish of West Baton Rouge, and declares that all the powers, privileges, grants, guaranties, and franchises, theretofore granted to said company for the construction, maintenance, and use of its main line of railroad within the State of Louisiana westerly from the city of New Orleans, shall be and are thereby made applicable to the said lines of railroad to Shreveport and to said point in the parish of West Baton Rouge: provided, however, that such provisions of the act, entitled "An Act to expedite the construction of the railroad of the New Orleans, Mobile, and Chattanooga Railroad Company, in the State of Louisiana," approved Feb. 17, 1869, as relates to the guaranty of the second-mortgage bonds of said company, shall be applicable only to such parts or portions of the said lines of railroads to Shreveport, and to said point in the parish of West Baton Rouge, as shall be surveyed, located, and constructed within five years from and after the acceptance of this act by said company; and the said provisions of said act shall be applicable to such parts or portions of said

last-mentioned lines of railroad as shall be surveyed, located, and constructed within the time last aforesaid.

The act of 1869 authorized the company to issue its bonds payable to the State of Louisiana, at the rate of $12,500 for every mile of railroad actually constructed and accepted by commissioners to be appointed by the governor. The payment of these bonds was to be secured by a mortgage on the road subject to a prior mortgage of the same amount, and the bonds are therefore designated in the statute as second-mortgage bonds. It was declared, also, that the failure to pay the coupons for interest on these bonds, or if any of the sinking refund required by the act should be in arrears for sixty days, the whole of the principal of the bonds should become due and the mortgage should contain a provision for the sale of the road by the trustee in that case.

These conditions being complied with, and the construction of forty miles of the road being completed to the satisfaction of the governor, he was directed to indorse on the bonds of the company, to the amount of $12,500 per mile for such forty miles, the guaranty of the State of Louisiana of the payment of these bonds, and deliver them to the company. This act also required the company to survey and locate the whole of the main line within eight months after acceptance of the act, a section of forty miles to be completed within twelve months after such survey, and the whole of the line within the State to be completed within three years after such survey and location; and a failure to comply with these requirements as to any part of said road released the State from the obligation to guarantee as to that part of the line. It is argued that the proviso to sect. 4 of the act of 1870, making the provisions of the act of 1869 applicable to the new lines, if constructed within five years instead of three, as in that act, does away with the provisions for requiring specific acts as to location and construction of forty miles, to be performed within shorter periods, and that the obligation of the State to guarantee the bonds continued for five years, though nothing had been done in the mean time.

We do not think this is a sound construction of the proviso, but that the period of five years is there mentioned instead of

three in the former act for the final completion of the road, a failure to comply with which released the State from its promise of any further guaranty of the bonds.

This, however, is not very material, as it only adds to the force of the argument, that when the State bought $2,500,000 of the stock of the company, and gave its own bonds for that sum, it was incurring a new debt, and was not discharging an old one of equal amount.

What was the obligation of the State in this matter prior to the act of 1871, and at the time the constitutional limitation of its debt became effectual? and what obligations are assumed by the issue of these bonds?

The State, by the former law, was to become surety for the bonds of the company without any other consideration than a desire for the construction of the road.

By the new amendment she became absolute debtor, and gave her own bonds.

By the former law she had a very stringent provision to secure her from loss for the use of her name as indorser of the bonds of the company.

By the new amendment she agrees unconditionally to pay $2,500,000 of money, with no security for its repayment and no indemnity against loss.

Under the former act she might never have been called on to indorse the bonds, as the conditions might never have been complied with, and if so called on, would perhaps have been held secure against loss by the provision for mortgage and sinking fund on a road to be constructed before the guaranty was indorsed on the bonds. And in fact it now appears very improbable that she would ever have been called on to indorse any bonds not already indorsed when the present bonds were issued.

Instead of a mere promise to indorse them, with a fair security against loss, with a reasonable ground of belief that the right to call for this guaranty would never arise, the State, by the new statute, subscribes for and purchases $2,500,000 of the stock of the company, gives her bonds for it, and becomes the debtor of the company for that amount.

By the new arrangement the State became transformed from

a possible creditor of the company, with security for her debt, into a debtor of the company with nothing to show for it but some worthless stock.

It seems impossible to hold that this is in any just sense a redemption of a former obligation. It is equally impossible to hold that the issue of these bonds, if valid, did not for the first time create a debt in regard to this transaction. There was no debt before this. There was no fixed obligation; no certain liability; no strong reason to believe that her promise would ripen into any absolute debt on her part.

The new arrangement was the creation of an unconditional debt of $2,500,000.

We are unable to discern the force of the reasoning by which validity is supposed to be imparted to these bonds by the act of the legislature.

The constitutional provision against an increase of the State debt was mainly if not solely intended to operate as a limitation on the power of the legislature. We do not know of any increase of the debt which could be lawfully made without its authority, unless it was by the non-payment of interest on what already existed. Certainly no new debt beyond the $25,000,000 could be made and be valid without such authority. It is, therefore, vain to say the legislature did it. It is equally vain to say that the legislature professed to be satisfying an old obligation, while on the face of the transaction it is quite apparent that it was a new debt, based on a new consideration, with only an incidental reference to an old contract liability to make it colorable.

We concur, therefore, with the Supreme Court of the State, in holding that these bonds constituted a new debt issued on a new consideration under a new act of the legislature, which was itself void because in conflict with the provision of the Constitution of the State, and the bonds are equally void as being in excess of the amount of debt which the State could constitutionally create.

Judgment affirmed.

DURKEE v. BOARD OF LIQUIDATION.

1. *Williams* v. *Louisiana* (*supra*, p. 637) reaffirmed.
2. After the bonds in question were issued, the General Assembly of Louisiana passed an act creating the Board of Liquidation, and authorizing it to convert and fund all valid outstanding claims against the State. A subsequent act declared the bonds to be void, and forbade the board to fund them. *Held*, that the act withdraws from the board all authority to act in the premises, and that the obligation of no contract is thereby impaired, inasmuch as there was no previous acceptance by bondholders of the proposition to fund, and no consideration had passed.

APPEAL from the Circuit Court of the United States for the District of Louisiana.

The facts are stated in the opinion of the court.

Mr. Simon Sterne and *Mr. George W. Biddle*, with whom were *Mr. A. Sydney Biddle* and *Mr. James Lowndes*, for the appellant.

Mr. Gustave A. Breaux and *Mr. James Lingan* for the appellee.

MR. JUSTICE MILLER delivered the opinion of the court.

The bill was filed against the Board of Liquidation of the State of Louisiana by Durkee and others, holders of a large number of the bonds issued to the New Orleans, Mobile, and Texas Railroad Company, which are part of the $2,500,000, mentioned in *Williams* v. *Louisiana*, *supra*, p. 637. Its object, as declared in the prayer for relief, is to have these bonds declared legal and valid obligations, and for such other relief as the case may require and to equity may seem just.

The case was heard in the Circuit Court on the bill, answer, and evidence, and the bill dismissed. The complainants appealed.

In the case of *Williams* v. *Louisiana*, to which we have already referred, the Supreme Court of Louisiana held all the issue of bonds of the class on which the bill is founded to be void because they were in excess of the $25,000,000 of indebtedness to which the State was limited by the constitutional amendment of 1870.

That amendment forbids the creation of any debt beyond that sum until the year 1890. The act under which the bonds now in question were issued was passed in 1871, and the Supreme Court of the State held them to be void because the debt then in existence already exceeded the $25,000,000 limited by the Constitution.

This decision of the State court has just been affirmed by this court, and in doing so we have expressed our concurrence in the grounds on which the State court acted.

Though neither of these decisions is binding on the appellants as an estoppel, because they were not parties to that suit, the principle on which it was decided necessarily governs this. The same objection to the validity of the bonds on which the decision in the former case was supported is taken in the present case by the defendant and set up in the pleading. The cases have been brought to this court and argued together by the same counsel and on the same ground as regards the validity of the bonds. We refer to that case for the reasons which satisfy us that the bonds are void.

There is another reason, however, why the present decree should be affirmed.

The Board of Liquidation is a mere agent of the government to enable it to carry into effect a plan of consolidating all its outstanding debt and converting it, with the consent of its creditors, into a uniform bond, with the same rate of interest, and providing additional security for its payment. The law under which this liquidating process was to take place and which created this board of liquidation, the present defendant, was passed in 1874, some time after all these bonds were issued. It did not, therefore, enter into the contract on which the bonds were issued. It was an offer on the part of the State to issue new bonds for all her valid bonds outstanding whenever the holders chose to accept the terms on which the exchange was to be made.

In 1876 the legislature of the State passed an act declaring the bonds now in question void, and forbidding the board to receive them as valid in the scheme of liquidation. The legislature undoubtedly had the right to forbid its own agent to receive these bonds. This law may not have affected their

validity. It certainly could not make them void if they were valid before. But it could prevent the board from exchanging them for other bonds. There was no contract with the holders of these bonds that this should be done, even if they were valid. To make such a contract there is needed the acceptance of the proposition of the State by the holder, and a good consideration. Neither of these existed in this case, when the legislature simply withdrew its proposition as to these bonds.

Decree affirmed.

BONHAM v. NEEDLES.

140-146

1. The rulings in *Harter* v. *Kernochan* (*supra*, p. 562) reaffirmed.
2. Although the records of a township, which was authorized by the statutes of Illinois to make a donation to a railroad company, and issue bonds in payment thereof, contain no evidence of a meeting of the township, whereat the qualified voters assented to the issue of bonds in payment of a donation, for which they have previously voted, the recital in the bonds, that they were issued in pursuance of those statutes, is conclusive upon the township in a suit brought against it by a *bona fide* holder, to enforce the payment of them.

APPEAL from the Circuit Court of the United States for the Southern District of Illinois.

The facts are stated in the opinion of the court.

Mr. Thomas J. Henderson for the appellants.

Mr. George A. Sanders for the appellees.

MR. JUSTICE HARLAN delivered the opinion of the court.

This was a suit commenced in the Circuit Court for Wayne County, Illinois, by Needles and others. Bonham and the other complainants are taxpayers and real-estate owners suing in behalf of themselves and all other like persons in Big Mound Township of Wayne County. The original defendants were the auditor of state, the treasurer of state, the clerk and the treasurer of the county, the collector of the township, the First National Bank of Springfield, and the unknown holders and owners of certain bonds (with their coupons), — five in

number and of $1,000 each, — issued, under date of April 1, 1870, in the name of the township, and payable, twenty years after date, to the Illinois Southeastern Railway Company or bearer, with interest at the rate of ten per cent per annum. The bonds purport to have been issued "by the township to aid in the construction of the Illinois Southeastern Railway, in pursuance of the authority conferred by an act of the General Assembly of the State of Illinois, entitled 'An Act to incorporate the Illinois Southeastern Railway Company,' approved Feb. 25, 1867, and an act amendatory thereof, approved Feb. 24, 1869, and an election of the legal voters of the aforesaid township, held on the tenth day of November, 1868, under the provisions of said act." Upon each bond was indorsed, under date of April 21, 1870, a guaranty of payment by the Springfield and Illinois Southeastern Railway Company, and the certificate of the State auditor, under date of July 19, 1870, stating that it was that day registered in his office pursuant to the provisions of "An Act to fund and provide for paying the railroad debts of counties, townships, cities, and towns, in force April 16, 1869."

After the township had for nearly ten years regularly, by an annual levy and collection of a tax for that purpose, paid the interest on the bonds as the same became due, — the order for such being made by the auditor of state, — the present bill was filed. It questioned the validity of the bonds, and asked a decree restraining the officers, who were made defendants, from the assessment or collection of taxes to meet them. Kernochan, one of the appellees, a citizen of Massachusetts, and the owner, by purchase in good faith, for value, of all the bonds, appeared in the State court, and upon his petition and bond the cause was removed to the Circuit Court of the United States, where upon the pleadings and proofs the bill was dismissed. The complainants appealed.

The controlling questions in the case have already been determined in *Harter* v. *Kernochan*, *supra*, p. 562. It was there ruled that the acts of assembly, recited in the bonds whose validity is here involved, were not repugnant to the Constitution of Illinois, adopted in 1848. We also held that the fifth section of the act of Feb. 24, 1869, conferred upon

such townships in Wayne and Clay Counties as had previously voted donations to the Illinois Southeastern Railway Company — the qualified voters of such townships assenting thereto at a regular or special town meeting or election — authority to issue bonds in payment of such donations. The township of Big Mound, on the 10th of November, 1868, voted a donation of $5,000 to the railroad company, one-third to be levied and collected by special tax and paid to the railway company, in each of the years 1869, 1870, and 1871; in lieu of which, however, the company bound itself to take township bonds if requisite authority to issue them could be obtained by further legislation. So far this case in its essential features resembles that. The chief difference between that case and the present one is, that in the former the recorded proceedings of the township distinctly showed that the bonds were voted at a special town meeting, duly called and held to consider the question of their issue; while in this case, the records of the township contain no evidence of a township meeting at which the qualified voters assented to the issue of bonds in payment of the donation voted on the 10th of November, 1868, except a certificate of William Book, claiming to be deputy clerk of Big Mound town. In that certificate he states that "at an election held at the Yates schoolhouse, on the twenty-eighth day of August that the majority of the voters present voted in favor of giving bonds to the Southeastern Railway Company for the bonus. This August 28th, 1869." Several witnesses testify that an election was held. But the correctness of the decree and the validity of the bonds in the hands of a *bona fide* purchaser do not depend upon proof, in this suit, that such an election was, in fact, duly called and held, at which the qualified voters assented to an issue of bonds in payment of the donation previously voted.

The statutes which we have mentioned conferred, as we have shown in *Harter* v. *Kernochan*, ample authority upon the township to issue bonds in payment of the donation voted, the qualified electors assenting thereto at a regular or special town meeting. The bonds recite that they were issued *in pursuance of the authority* conferred by those statutes. Such recitals import a compliance with the statute, and the township, according to the uniform decisions of this court, is estopped to

assert, as against a *bona fide* holder for value, that such recitals are untrue. *Buchanan* v. *Litchfield* (102 U. S. 278), and authorities there cited.

There are other questions in the case which counsel have pressed upon our consideration. None of them are, in our judgment, vital to its merits, and we do not stop to comment upon them.

Decree affirmed.

WARDELL *v.* RAILROAD COMPANY.

1. The directors of a corporation are subject to the obligations which the law imposes upon trustees and agents. They cannot, therefore, with respect to the same matters, act for themselves and for it, nor occupy a position in conflict with its interests.
2. Hence, a court will refuse to give effect to arrangements by directors of a railroad company to secure, at its expense, undue advantages to themselves, by forming, as an auxiliary to it, a new company, with the understanding that they or some of them shall become stockholders in it, and then that valuable contracts shall be given to it by the railroad company, in the profits of which they, as such stockholders, shall share.
3. The contract entered into July 16, 1868, by the Union Pacific Railroad Company, by direction of the executive committee of the board of directors, with Godfrey and Wardell (*infra*, p. 652), which the latter assigned, without consideration, to a new company, in which a majority of the stock was taken by six directors of the old company, declared to be fraudulent and void.

APPEAL from the Circuit Court of the United States for the District of Nebraska.

The facts are stated in the opinion of the court.

Mr. James O. Broadhead and *Mr. James M. Woolworth* for the appellant.

Mr. Andrew J. Poppleton for the appellee.

MR. JUSTICE FIELD delivered the opinion of the court.

The road of the Union Pacific Railroad Company passes for its entire length, from Omaha on the Missouri River to Ogden in Utah, a distance of 1,036 miles, through a country almost destitute of timber fit for fuel. During its construction, however, large deposits of coal, of excellent quality and easily

worked, were discovered in land along its line, from which abundant supplies for the use of the company could be obtained. The complainant represents that their extent, quality, and value were unknown, and that doubts were generally entertained as to their adequacy to meet the necessities of the company, until he had made explorations in June, 1868, and reported to its managers the information which he had thus acquired; and that upon that information the contract which has given rise to this suit was made, after much negotiation, between the company and himself and Cyrus O. Godfrey, with whom he had become associated in business. But in this respect he is mistaken. Though he may have imparted to the managers the information acquired by his explorations, the knowledge of the existence and general character of the deposits had been communicated to them years before by the engineers appointed to survey the route for the construction of the road. They had reported that coal in inexhaustible quantities, of suitable quality for the purposes of the company, was found so near the line of the road as to render its extraction and delivery easy and convenient. It is of little moment, however, whether the knowledge of the existence, character, extent, and accessibility of the deposits was obtained from the complainant or from others; it is sufficient that the directors of the Union Pacific Railroad Company, having the control and management of its road and business, were informed upon the subject at the time the contract mentioned was made. That contract was as follows: —

"This agreement, made this sixteenth day of July, in the year of our Lord one thousand eight hundred and sixty-eight, between the Union Pacific Railroad Company, by its proper officers, of the first part, and Cyrus O. Godfrey and Thomas Wardell, of the State of Missouri, or assigns, parties of the second part: —

"Witnesseth, that the said party of the first part agrees that the said parties of the second part may prospect at their own expense for coal on the whole line of the Union Pacific railway, and its branches and extensions, and open and operate any mines discovered, at their own expense; that said railroad company agrees to purchase of said parties of the second part all clean merchantable coal mined along its road, needful for engines, depots, shops, and

other purposes of the company, and to pay for the same the first two years at the rate of six dollars per ton; for the next three years at five dollars per ton; for the four years thereafter at four dollars per ton; and for the six years remaining at the rate of three dollars per ton, delivered upon the cars at the mines of the said party of the second part, and which shall not be less than ten per cent added to the cost of the same to the said party of the second part. This contract to be and remain in full force and effect for the full term of fifteen years from the date hereof.

"The said railroad company agrees to facilitate the operations of the said parties of the second part, in prospecting and otherwise, by means of such information as it may possess, and by furnishing free passes on its road to the agents of the parties of the second part, not exceeding six in number. Said railroad company further agrees to put in switches and the necessary side-tracks, at such points as may be mutually agreed upon, for the accommodation of the business of the said parties of the second part; that the said parties of the second part agree to make all necessary exertions to increase the demand and consumption of coal by outside parties along the line of said railroad, and to open and operate mines at such points where coal may be discovered, as may be desired by said railroad company; and to expend within the first five years from the date of this agreement, in the purchase and development of mines and mining lands, and improvements for the opening, successful and economical working of the same, not less than the sum of twenty thousand dollars; also to furnish for the use of the said railroad company good merchantable coal, and to pay all expenses for improvements for loading coal into cars. Any improvement desired by said railroad company in regard to the coal to be used by it shall be at the cost of said railroad company.

"In consideration of their exertions to increase the demand for coal, and the large sum to be expended in improvements, it is further agreed that the parties of the second part shall have the right to transport over the said railroad and its branches for the next fifteen years from the date of this agreement, coal for general consumption at the same freight that will be charged to others; but the said parties of the second part shall be entitled in consideration of services to be rendered as herein provided, to a drawback of twenty-five per cent on all sums charged for the transportation of coal.

"The said railroad company agrees to furnish the parties of the second part such cars as they may require in the operation of their

business, and to transport them as promptly as possible. This agreement to remain in force for fifteen years.

"The coal lands owned by said party of the first part are hereby leased for the full term of fifteen years to the said parties of the second part or their assigns, for the purpose of working the same as may seem to them profitable; said parties of the second part to pay for the first nine years a royalty of twenty-five cents per ton for each ton of coal taken from their lands, excepting always coal taken from entries, air-courses, or passage-ways, for which coal no royalty shall be paid; payments for the same being due and payable monthly.

"The royalty for the last six years of this lease shall be free, provided the price of coal to the railway company is reduced to three dollars per ton. If three dollars and twenty-five cents or more per ton, then in that case the royalty shall be as during the first nine years.

"In witness whereof, we have hereunto set our hands and seals, this the day and year first above mentioned.

(Signed) "OLIVER AMES,
"*President of the Union Pacific R. R. Co.*
"C. O. GODFREY.
"THOMAS WARDELL."

This contract on the part of the railroad company was made by direction of the executive committee of the board of directors, of whom the president was one, and not by the board itself. It was never reported to the board for its consideration or action. But notwithstanding this defect, in August following the contractors, Wardell and Godfrey, entered upon its execution, and began work on several mines along the line of the road. Soon afterwards Godfrey transferred his interest to Wardell, perceiving, as the bill alleges, that sums beyond those stipulated would be required, and being alarmed at the risks which he believed he had assumed.

In January following (1869) a corporation under the laws of Nebraska, called the Wyoming Coal and Mining Company, was formed to develop and work the mines, having a capital stock of $500,000, divided into shares of $100 each, a majority of which was taken by six of the directors of the railroad company, one of whom was its president; and to it Wardell assigned his contract without any consideration.

The corporation continued the execution of the contract, Wardell, acting as its superintendent, secretary, and general manager, and delivered coal as needed by the railroad company up to the 13th of March, 1874, when the officers and agents of that company, by order of its directors, took forcible possession of the mines and of the books, papers, tools, and other personal property of the coal company, which they have held and used ever since. Hence the present suit, which Wardell brings in his own name, alleging as a reason that a majority, if not all, of the directors and stockholders of the coal company, except himself, are also directors and stockholders of the railroad company, and that, therefore, he can obtain no relief by a suit in the name of the coal company. He prays that an account may be taken of the amount due for the coal delivered to the railroad company; for drawback on freight from the date of the contract to the forcible seizure alleged; for coal extracted from the mines since their seizure; for the property of the coal company taken, and for the damages arising from the seizure and the attempted abrogation of the contract; and that the rights and interests of the several parties may be ascertained and declared; and for general relief.

To this bill the railroad company filed an answer, setting up in substance three defences: —

1st, That the contract of July 16, 1868, was a fraud upon the company; that it was made on its part by the executive committee of its board of directors, a majority of whom were, by previous agreement, to be equally interested with the contractors in it, and for that reason its terms were made so favorable to the contractors and unfavorable to the company as to enable the former to make large gains at the expense of the latter, and that the organization of the Wyoming Coal and Mining Company was a mere device to enable those directors to participate in the profits; and that, therefore, the contract was of no validity and binding obligation upon the company;

2d, That at the time of the seizure of the property the railroad company was the owner of nine-tenths of the stock of the coal company, and had become apprehensive that Wardell, its superintendent and manager, would not furnish the coal needed to run the trains; and,

3d, That since then the coal company and the railroad company, through their boards of directors, have had a settlement of their transactions, by which the contract of July 16, 1868, has been rescinded and the sum of $1,000,000 allowed to the coal company, and that the railroad company has set apart and tendered to the complainant $100,000 for his share in the coal company in that settlement.

The court below held that the contract of July 16, 1868, was a fraud upon the company, but that the complainant was, apart from it, entitled to some compensation for his time, skill, and services while engaged in taking out the coal, with the return of the money actually invested and compensation for its use, the amount to be credited with what he had actually received out of the business; and that at his election he could have an accounting upon that basis or take the $100,000 tendered by the company. Of the alternatives thus offered the complainant elected to take the $100,000 instead of having the accounting mentioned, but appealed to this court from the decree, contending that the contract itself was valid and that he is entitled to an accounting upon that hypothesis.

The evidence in the case justifies the conclusion of the court below as to the nature of the contract of July 16, 1868. It was evidently drawn more for the benefit of the contractors than for the interest of the company. The extent, value, and accessibility of the coal deposits along the line of the road of the company were, as stated above, well known at the time to its directors, having the immediate control and management of its business. Wardell, the principal contractor, informed those with whom he chiefly dealt in negotiating the contract that coal could be delivered to the company at a cost of two dollars per ton, yet the contract, which was to remain in force fifteen years, stipulated that the company should pay treble this amount per ton for the coal the first two years, two and a half times the amount for the next three years, twice the amount for the following four years, and one-half more for the balance of the time. And lest these rates might prove too little, the contract further provided that the sum paid should not be less than ten per cent added to the cost of the coal to the contractors. These terms and the leasing of all the coal lands of the

company for fifteen years to those parties upon a royalty of twenty-five cents a ton for the first nine years, and without any royalty afterwards if the price of the coal should be reduced to three dollars, with the stipulation to provide side-tracks to the mines, and also to furnish cars for transportation of coal for general consumption, and after charging them only what was charged to others, to allow them a drawback of twenty-five per cent on the sums paid, gave to them a contract of the value of millions of dollars. These provisions would of themselves justly excite a suspicion that the directors of the railroad company, who authorized the contract on its behalf, had been greatly deceived and imposed upon, or that they were ignorant of the cost at which the coal could be taken from the mines and delivered to the company. But the evidence shows that those directors were neither deceived nor imposed upon, nor were they without information as to the probable cost of taking out and delivering the coal. And what is of more importance, it shows, as alleged, their previous agreement with the contractors for a joint interest in the contract, and, in order that they might not appear as co-contractors, that a corporation should be formed in which they should become stockholders, and to which the contract should be assigned; and that this agreement was carried out by the subsequent formation of the Wyoming Mining and Coal Company and their taking stock in it. This matter was so well understood that when the contractors commenced their work in developing the mines and taking out the coal, they kept their accounts in the name of the proposed company, though no such company was organized until months afterwards.

It hardly requires argument to show that the scheme thus designed to enable the directors, who authorized the contract, to divide with the contractors large sums which should have been saved to the company, was utterly indefensible and illegal. Those directors, constituting the executive committee of the board, were clothed with power to manage the affairs of the company for the benefit of its stockholders and creditors. Their character as agents forbade the exercise of their powers for their own personal ends against the interest of the company. They were thereby precluded from deriving any advantage from contracts, made by their authority as directors, except

through the company for which they acted. Their position was one of great trust, and to engage in any matter for their personal advantage inconsistent with it was to violate their duty and to commit a fraud upon the company.

It is among the rudiments of the law that the same person cannot act for himself and at the same time, with respect to the same matter, as the agent of another whose interests are conflicting. Thus a person cannot be a purchaser of property and at the same time the agent of the vendor. The two positions impose different obligations, and their union would at once raise a conflict between interest and duty; and, "constituted as humanity is, in the majority of cases duty would be overborne in the struggle." *Marsh* v. *Whitmore*, 21 Wall. 178, 183. The law, therefore, will always condemn the transactions of a party on his own behalf when, in respect to the matter concerned, he is the agent of others, and will relieve against them whenever their enforcement is seasonably resisted. Directors of corporations, and all persons who stand in a fiduciary relation to other parties, and are clothed with power to act for them, are subject to this rule; they are not permitted to occupy a position which will conflict with the interest of parties they represent and are bound to protect. They cannot, as agents or trustees, enter into or authorize contracts on behalf of those for whom they are appointed to act, and then personally participate in the benefits. Hence all arrangements by directors of a railroad company, to secure an undue advantage to themselves at its expense, by the formation of a new company as an auxiliary to the original one, with an understanding that they, or some of them, shall take stock in it, and then that valuable contracts shall be given to it, in the profits of which they, as stockholders in the new company, are to share, are so many unlawful devices to enrich themselves to the detriment of the stockholders and creditors of the original company, and will be condemned whenever properly brought before the courts for consideration. *Great Luxembourg Railway Co.* v. *Magnay*, 25 Beav. 586; *Benson* v. *Heathorn*, 1 Y. & Col. C. C. 326; *Flint & Pere Marquette Railway Co.* v. *Dewey*, 14 Mich. 477; *European & North American Railway Co.* v. *Poor*, 59 Me. 277; *Drury* v. *Cross*, 7 Wall. 299.

The scheme disclosed here has no feature which relieves it of its fraudulent character, and the contract of July 16, 1868, which was an essential part of it, must go down with it. It was a fraudulent proceeding on the part of the directors and contractors who devised and carried it into execution, not only against the company, but also against the government, which had largely contributed to its aid by the loan of bonds and by the grant of lands. By the very terms of the charter of the company five per cent of its net earnings were to be paid to the government. Those earnings were necessarily reduced by every transaction which took from the company its legitimate profits. It is true that some of the directors, who approved of or did not dissent from the contract, early stated that they held their stock in the coal company for the benefit of the railroad company and transferred it, or were ready to transfer it, to the latter; but the majority expressed such a purpose only when the character and terms of the contract became known and they were desirous to screen themselves from censure for their conduct.

The complainant, therefore, can derive no benefit from the contract thus tainted, or sustain any claim against the railroad company for its repudiation. The coal company may, perhaps, be entitled to reasonable compensation for the labor actually expended in the development of the mines and delivery of coal to the railroad company, considered entirely apart from the contract; and also for its property forcibly taken possession of by the officers of the railroad company. But an accounting for compensation thus limited is not desired by him, and as the two companies have since settled the matter in dispute between them by the payment of $1,000,000 to the coal company, of which $100,000 has been set apart for complainant, and he has elected to take that sum if an accounting cannot be had upon the assumed validity of the contract, the decree of the court below is

Affirmed.

PECK v. COLLINS.

377-358

1. Under the patent laws in force in 1866, letters-patent became absolutely void on the surrender of them.
2. The fifty-third section of the act of July 8, 1870, c. 230 (16 Stat. 205; Rev. Stat., sect. 4916), declares that the surrender "shall take effect upon the issue of the amended patent." *Semble*, that the effect of an adverse decision on the title of the patentee to the invention would be as fatal to the original letters as to his right to a reissue.

ERROR to the Court of Appeals of the State of New York.

The facts are stated in the opinion of the court.

Mr. Alexander D. Wales for the plaintiff in error.

Mr. M. M. Waters, *contra*.

MR. JUSTICE BRADLEY delivered the opinion of the court.

This writ of error is brought to review a judgment of the Court of Appeals of the State of New York involving the construction and effect of certain proceedings under the laws of the United States relating to letters-patent for inventions. On the 25th of October, 1865, one Byron Mudge obtained letters-patent for an improved mode of sinking wells. In January, 1866, he assigned to Preston R. Peck and George W. Peck each an undivided quarter of the patent. On the 5th of March, 1866, Mudge surrendered his patent, and applied for a reissue, and at the same time asked that an interference should be declared between him and one James Suggett, who had obtained two patents relating to the same matter, one in March, 1864, and the other in February, 1866. An interference was accordingly declared, and the application for reissue was, of course, suspended. The interference also embraced the application of one Nelson W. Green for a patent, then pending. This interference case was pending before the Patent Office and the Supreme Court of the District of Columbia, to which it was finally appealed, until January, 1868, when a decision was reached adverse to Mudge's application for a reissue, sustaining Suggett's patent, and granting a patent to Green. The effect of these proceedings and of this decision upon Mudge's patent was the matter passed upon by the Court of Appeals.

That court held that the patent had thereby become valueless and void for any purpose, except perhaps as it might be ancillary to a bill in equity under sect. 4915 of the Revised Statutes of the United States.

The materiality of this decision to that of the case arose from the following facts: On the 24th of April, 1866, after Mudge had surrendered his patent for a reissue and had obtained a declaration of interference, as before stated, he and the two Pecks entered into an agreement with Collins, the defendant in error, to sell to him, for the price of $4,000, one-fourth of the patent, and to give him a deed therefor whenever he should call for it. Collins paid the Pecks their portion of the purchase-money in advance by delivering to them two 7–30 United States bonds for $1,000 each. On the 28th of April, 1866, George W. Peck entered into a further agreement with Collins to convey to him, for the price of $1,500, three thirty-seconds more of the patent, and to give a deed therefor when called upon for that purpose. Collins gave his note for the last-named sum.

As these contracts were made in ignorance of the effect of a surrender of the patent for a reissue, they were afterwards conditionally revoked by returning the consideration money and note to Collins, upon the following stipulations respectively. On the 11th of June, 1866, Collins and George W. Peck executed an agreement of which the following is a copy, namely:

"Articles of agreement made this 11th day of June, 1866, between Truman D. Collins, of Cortland, N. Y., of the first part, and George W. Peck, of Cortland, N. Y., of the second part, are as follows:—

"Whereas the said Peck did, by a contract bearing date April 28th, 1866, bind himself, in consideration of the sum of fifteen hundred dollars, which sum was then paid to said Peck, to deed to said Collins an undivided three thirty-second part of a patent-right entitled a new mode of sinking wells; and whereas said contract was given after the letters-patent had been surrendered up for a reissue, and in ignorance of the fact that under certain circumstances the letters would not be returned to the owners of said patent; and whereas the said Peck desires a release from his obligations under the said contract in case he shall not be enabled to fulfil such obligations:

"Now this agreement witnesseth, that the said Collins, in consideration of the restoration of the said fifteen hundred dollars, agrees to release the said Peck from all obligations he has incurred under said contract, provided said Peck shall not be enabled at any time to fulfil the terms and conditions of said contract. And the said Collins further agrees to pay all that portion of the expenses of the application for a reissue which have been incurred, or which may be hereafter incurred, which it shall be incumbent on said Peck to pay as an owner of said patent, as stated in said patent, viz. a three thirty-second part. The said Collins further agrees to pay to the said Peck the sum of fifteen hundred dollars when the said Peck shall notify him of his readiness to fulfil the said contract by deeding to said Collins his interest in said patent or any reissue which may be granted under said application.

"T. D. COLLINS.
"G. W. PECK."

On the 6th of July, 1866, Collins, on receiving from the two Pecks the two 7–30 bonds which he had delivered to them, gave them the following receipt and agreement, namely:—

"Received July 6th, 1866, of Preston R. Peck and G. W. Peck, two thousand (2,000) dollars in 7–30 bonds, said bonds to be returned to Preston R. Peck and G. W. Peck as soon as Byron Mudge succeeds in getting a reissue of a patent for putting down wells, now in the Patent Office, or providing the old patent is returned; but if said patent is not reissued or returned, then T. D. Collins is to keep the bonds and surrender his article he has for the purchase of an interest in said patent.

"T. D. COLLINS."

Preston R. Peck assigned all his interest in this agreement to George W. Peck.

After the application of Mudge for the reissue of the patent had been refused, and a final adjudication had been made against his claim and in favor of Suggett and Green, the attorney of G. W. Peck, in some way which does not appear, got possession of the original patent, and Peck tendered himself ready to perform the conditions of the last two agreements, and demanded payment or return of the sums mentioned therein, to wit, the $2,000 and the $1,500. This being refused by Collins, the present suit was brought to recover the money.

The judge who tried the cause nonsuited the plaintiff upon the following view of the case, as stated in the bill of exceptions, namely: "I am inclined to think that I ought to nonsuit the plaintiff for the reason that the surrender of this patent by the patentee operated as an extinguishment of that patent. That certainly is within the reasoning of Judge Nelson in the case in Black's Reports, — although that case is not precisely in point and in accordance with the apparent and real intent of the parties when a surrender is made, and if such surrender does not absolutely and unqualifiedly extinguish the patent, — and it seems to me that there should be some act of the department indicating an intention to send that patent back into the world as a valid patent. There should be a definite act of the department indicating an intention that it should remain in force, still having life and vitality."

The plaintiff excepted, and the cause was taken by appeal to the Supreme Court of New York in General Term, and thence to the Court of Appeals, by both of which courts the judgment was affirmed. The Court of Appeals construed the two contracts to mean by a *return* of the old patent, a return of said patent clothed with the same force and validity which it had before it was surrendered for a reissue; and held that the effect and operation of the refusal of a reissue, and the decision against Mudge on the interference, was to destroy such force and validity. The first question for us to decide is, whether this decision as to the effect of the surrender, and the refusal to reissue the patent, was or was not erroneous. If it was not, we are relieved from an examination of any other question in the case. And on this point we have very little embarrassment. We think that the Court of Appeals was right in deciding that by the surrender of Mudge's patent for a reissue, the interference declared thereon, the decision against Mudge, and the subsequent refusal of a reissue of his patent, said patent became destitute of validity and absolutely void.

It was decided by this court in the case of *Moffitt* v. *Garr* (1 Black, 273), that the surrender of a patent under the act extinguishes it. That was an action to recover damages for

an infringement. Whilst the action was pending the patent was surrendered, and this fact was pleaded as a bar to the further prosecution of the suit. The averment of the plea was "that since the commencement, &c., the said Moffitt surrendered to the United States the patent before that time issued to him, and for the alleged infringement of which this suit is brought." This plea was sustained on demurrer, and judgment given for the defendant. The judgment was affirmed by this court after argument by able counsel. Mr. Justice Nelson, in delivering the opinion of the court, said: "The point in the case is, whether or not the patentee may maintain a suit on the surrendered patent instituted before the surrender, if he has not availed himself of the whole of the provision, and taken out a reissue of his patent with an amended specification. The construction given to this section, so far as we know, and the practice under it, in case of a surrender and reissue, are, that the pending suits fall with the surrender. A surrender of the patent to the commissioner, within the sense of the provision, means an act which, in judgment of law, extinguishes the patent. It is a legal cancellation of it, and hence [it] can no more be the foundation for the assertion of a right after the surrender, than could an act of Congress which has been repealed."

Since the decision of this case it has been uniformly held that if a reissue is granted, the patentee has no rights except such as grow out of the reissued patent. He has none under the original. That is extinguished. And, although for the purpose of fixing a date to the title in a question of priority, and of limiting the period for which the patent is to run, the date of the original patent is important; no damages can be recovered for any acts of infringement committed prior to the reissue.

It seems to us equally clear, that as the law stood when that decision was made, and as it continued to stand in 1866, when the surrender of Mudge's patent took place, a patent surrendered for reissue was cancelled in law as well when the application was rejected as when it was granted. The patentee was in the same situation as he would have been if his original application for a patent had been rejected. The law declares

in terms, that "the specifications and claim in every such case shall be subject to revision and restriction in the same manner as original applications are." Act of March 3, 1837, c. 45, sect. 8, 5 Stat. 193; July 8, 1870, c. 230, sect. 53, 16 Stat. 205; Rev. Stat., sect. 4916. The question of his right to any patent at all was opened anew, the same as upon an original application for a patent. Surrender of the patent was an abandonment of it, and the applicant for reissue took upon himself the risk of getting a reissue or of losing all. A failure upon the merits, in a contest with other claimants, only gave additional force to the legal effect of the surrender.

Since the surrender of the patent in this case the patent laws have undergone a general revision by the act of July 8, 1870, c. 230. In the fifty-third section of that act (being the section relating to the surrender and reissue of patents), a new clause was introduced, declaring that the surrender "shall take effect upon the issue of the amended patent;" and this clause is retained in sect. 4916 of the Revised Statutes. What may be the effect of this provision in cases where a reissue is refused, it is not necessary now to decide. Possibly it may be to enable the applicant to have a return of his original patent if a reissue is refused on some formal or other ground which does not affect his original claim. But if his title to the invention is disputed and adjudged against him, it would still seem that the effect of such a decision should be as fatal to his original patent as to his right to a reissue.

We find no error in the record.

Judgment affirmed.

SMELTING COMPANY *v.* KEMP.

Under the circumstances of this case, the court declines to accept the submission of the cause against the wishes of those who, being collaterally interested in the decision which may be made, united in the employment of counsel to present their defence, and contributed to a common fund for the payment of the expenses of the litigation.

ERROR to the Circuit Court of the United States for the District of Colorado.

Motion to set aside submission.

Mr. Robert H. Bradford and *Mr. Willis Drummond* in support of the motion.

Mr. Alexander T. Britton and *Mr. Walter H. Smith*, *contra*.

MR. CHIEF JUSTICE WAITE delivered the opinion of the court.

The showing made on this motion satisfies us that this case, and the one which follows it on the docket, were brought here for a determination of the questions on which depends the title of the St. Louis Smelting and Refining Company to its addition to Leadville; that the decision of these suits will dispose of a large number of others now pending in the court below; that when the suits were begun below all the defendants united in the employment of counsel to present their defence, and contributed to a common fund for the payment of the expenses of the litigation; that since these cases have been docketed here the parties to this have come to an amicable understanding in respect to the subject-matter of their particular litigation, under which this submission has been made, through new counsel employed in behalf of the defendants in error and without the concurrence of those interested in the other case and the suits still pending below. The questions involved are important. Under these circumstances we think we ought not to accept the submission of the cause against the wishes of those collaterally interested in the decision that may be made.

The submission will, therefore, be set aside, and the cause restored to its place on the docket; and it is

So ordered.

SCHAUMBURG v. UNITED STATES.

1. *United States* v. *Eckford* (6 Wall. 484) reaffirmed.
2. Where matters of set-off are pleaded by the defendant in a suit brought by the United States, the refusal of the court below to direct the jury to certify the amount which they may find due to him from the plaintiff will not be reviewed here.

ERROR to the Circuit Court of the United States for the Eastern District of Pennsylvania.

Mr. George W. Biddle and *Mr. Charles Henry Jones* for the plaintiff in error.

The Solicitor-General, contra.

MR. CHIEF JUSTICE WAITE delivered the opinion of the court.

The judgment in this case is affirmed on the authority of *United States* v. *Eckford*, 6 Wall. 484. Claims for credit can be used in suits against persons indebted to the United States to reduce or extinguish the debt, but not as the foundation of a judgment against the government. In the present case the court instructed the jury as matter of law that the plaintiff in error, from July 1, 1836, until March 24, 1845, was in the military service of the United States as a first lieutenant of dragoons or cavalry; and that he was entitled as such to credit for the pay and emoluments that accrued during that period, and this was admitted to exceed the debt sued on by the United States. The jury thereupon brought in a verdict for the defendant. Had the jury gone further and struck the balance that would be due from the United States, no judgment could have been rendered for it. Any verdict, therefore, beyond the one actually given would have been fruitless. The court itself decided that the plaintiff in error was entitled to his pay and emoluments from July 1, 1836, to March 24, 1845. While sometimes the jury have been permitted to certify to a balance they find to be due from the government in cases of this kind, and under some circumstances it may be proper they should do so, a refusal of the court to direct that it be done cannot be reviewed here.

Judgment affirmed.

NATIONAL BANK v. CITY BANK.

Pursuant to orders received from A., the owner of the Corn Exchange Elevator at Oswego, who was engaged in storing grain for the public and doing business on his own account, B. bought for him two cargoes of wheat, and drew sight and time drafts for the purchase-money. C., a bank at Milwaukee, bought the drafts and received the bills of lading. The latter describe B. as the shipper, and, by their terms, each cargo was to be delivered at Oswego to the account or order of D., cashier of C., care of the City Bank. C. thereupon enclosed the drafts and bills of lading to the City Bank, saying, "On payment of the drafts you will deliver the cargo to the order of A. If not paid, please hold and advise by telegraph." The bank acknowledged their receipt, and presented the sight-drafts to A., who paid them, and accepted the time-drafts. Upon the arrival of the wheat at Oswego, the master of each vessel reported to the cashier of the City Bank, who, knowing that A. was the owner of the Corn Exchange Elevator, indorsed the bills of lading: "Deliver to the Corn Exchange Elevator for account of D., cashier, Milwaukee, subject to the order of the City Bank, Oswego." After the wheat had been so delivered, A. sold and shipped it. In its account with C., the City Bank made a charge for its trouble beyond the customary percentage for collecting and remitting the proceeds of the drafts. Before the time-drafts became due, A. failed. They were duly protested for non-payment, and have not been paid. In an action by C. against the City Bank, — *Held*, 1. That the City Bank, in receiving and acknowledging the drafts and bills of lading, with the accompanying instructions, became the agent of C. in the business which it had undertaken. 2. That whether, in discharging its duties as such agent, it exercised reasonable diligence and care, is a question for the jury, which the court below should not have withdrawn from them and decided.

ERROR to the Circuit Court of the United States for the Northern District of New York.

The facts are stated in the opinion of the court.

Mr. H. M. Finch for the plaintiff in error.

Mr. Albertus Perry, contra.

MR. JUSTICE MILLER delivered the opinion of the court.

A. F. Smith & Co. were the owners of the Corn Exchange Elevator of Oswego, N. Y., in which they were engaged in the general business of elevating and storing grain for the public. They were also large dealers in grain on their own account. In September, 1869, Mower, Church, & Bell, commission merchants in Milwaukee, received orders from Smith & Co. to purchase for them two cargoes of wheat, and to draw on them for the purchase-money against each cargo. The cargoes were

bought, and sight-drafts for part of the purchase-money and time-drafts for the balance were, in each instance, drawn on A. F. Smith & Co.

The Milwaukee National Bank purchased these drafts, and received also the bills of lading for the wheat. They describe Mower, Church, & Bell as the shippers, and, by their terms, the cargo, in each case, is to be delivered at Oswego to the account or order of T. L. Baker, cashier of the Milwaukee Bank, care of the City Bank of Oswego.

The Milwaukee Bank enclosed the drafts and the accompanying bills of lading to the City Bank of Oswego, with instructions about insurance, and added, "On payment of the drafts you will deliver the cargo to the order of Messrs. Smith & Co. If not paid, please hold and advise by telegraph. Messrs. Smith & Co. will pay all expenses."

The letter and enclosures were duly received and acknowledged by the City Bank, and on presentation to A. F. Smith & Co. they paid the sight-drafts and accepted the time-drafts.

When the vessels arrived at Oswego the masters promptly reported to Mannering, the cashier of the City Bank, who made the following indorsement on each bill of lading held by the masters: —

"Deliver to the Corn Exchange Elevator, for account of T. L. Baker, cashier, Milwaukee, subject to order of the City Bank, Oswego.

"Oct. 9, 1869. D. MANNERING, *Cashier.*"

A. F. Smith & Co. sold and shipped the wheat after it had been put in their elevator, and shortly thereafter they failed. When the time-drafts fell due, they were duly protested for non-payment, and have never been paid.

The Milwaukee Bank sued the City Bank to recover the loss on the drafts, on the ground that the City Bank had delivered the wheat to Smith & Co. before the drafts were paid, contrary to the instructions which accompanied the drafts and bills of lading. All the evidence is embodied in the bill of exceptions, and on the case, as there made, the court instructed the jury to find a verdict for the defendant, which was done. It is this instruction which is assigned for error by the plaintiff.

The City Bank, in receiving the drafts and bills of lading with instructions to deliver the wheat to A. F. Smith & Co., on payment of the drafts, and acknowledging the receipt of these drafts, became the agent of the Milwaukee Bank in the business which it had undertaken. Whatever obligation might, under other circumstances, be imposed on the bank by its consent to receive the drafts and bills of lading, it, in the present case, received them with instructions which the bills of lading empowered it to execute; namely, to control the possession of the wheat until the drafts on Smith & Co. were paid. In acknowledging the receipt of these papers the cashier says: "We prefer, *after this*, not to receive B. L. (meaning bill of lading) when we have to look after the property." This is an implied admission that they were to look after the property, and would do so in the case to which the letters related. The bank also undertook to discharge this duty when the masters of the vessels, presenting themselves and cargo to the cashier of that bank for delivery, were directed by him in writing to deliver to the Corn Exchange Elevator. It, therefore, undertook to discharge a duty as agent of the Milwaukee Bank in regard to the custody of the wheat, under instructions that it should deliver it to Smith & Co. on payment of the drafts. There is evidence tending to show that the City Bank, in its account with the Milwaukee Bank, made an additional charge or percentage for their trouble beyond the customary charge for collecting and remitting proceeds of the drafts. So that it undertook a duty for which it received and intended to exact compensation.

What, then, is the measure of its obligation as such agent to the plaintiff?

We suppose that there can be no question that it should use due care and diligence in performing the task which it had undertaken.

One of the clear duties of an agent, under such circumstances, is to obey instructions, if by a reasonable exercise of diligence and care they can be obeyed.

We think the instructions in this case very clearly implied that the bank, which by the bill of lading was invested with the full right to the possession of the wheat, should not deliver

it to A. F. Smith & Co., except upon payment of the drafts, — that is, of all the drafts drawn against each cargo of wheat. The reasons for this are very plain. The wheat had been bought by Mower, Church, & Bell in Milwaukee for A. F. Smith & Co., but they had to raise the money to pay for it by drafts on the latter. These drafts could only be negotiated by placing the control of the wheat in the hands of the purchasers of the drafts as security for their payment. The sight-drafts were paid by Smith & Co. when the wheat arrived in Oswego. They had thus paid that much money on the purchase. They were to pay all expenses. There remained unpaid, however, the time-drafts; and the instruction of the Milwaukee Bank to its agent, the City Bank, was not to part with the possession and control of this wheat to Smith & Co. until those drafts were paid. It was the only security which the bank had for their payment, and it was ample.

As we have already said, A. F. Smith & Co. were the owners and managers of the Corn Exchange Elevator. It is proved that the officers of the bank knew this. The cashier of the City Bank, therefore, knew that when he made the order on the bills of lading for the delivery of the wheat to the Corn Exchange Elevator, he was ordering its delivery to A. F. Smith & Co. It was by reason of this delivery and the failure of Smith & Co. that the amount of the drafts was lost to plaintiff.

Did the defendant, therefore, under the circumstances of the case, exercise due care and diligence in storing this wheat in the Corn Exchange Elevator?

The judge took this question from the jury and decided it in favor of the defendant. We are of opinion that in this the court erred. We do not decide here that the defendant was negligent. We think there was evidence on which that question should have been left to the jury. We think it should still be left to a jury.

It was said in answer to this view of the subject that the bank had no warehouse or other place of its own in which to store the wheat, and that this was known to the Milwaukee Bank, which must, therefore, have known that the City Bank would be compelled to store it with some one until the drafts, which had some time to run, should be paid. That Smith &

Co. were supposed to be safe and solvent men engaged in that business, of good reputation, and that all wheat received under such circumstances in Oswego was deposited in elevators. These are circumstances for the jury to consider. On the other hand, it is to be said that there were other elevators in Oswego, not owned by Smith & Co., ready to receive the wheat. To some of these it could have been delivered without danger of complicating the possession as bailee, with possession under claim of ownership. And this is important, for there are laws making the embezzlement of property, when held as bailee by warehousemen and elevators, a criminal offence. It would be more difficult to convict Smith & Co. of embezzlement for selling this wheat when it had been bought for them, part of the money paid for it by them, and when they had accepted negotiable drafts for the remainder of the purchase-money, and when in fact it was their property, subject only to the payment of their outstanding drafts.

Was it acting with ordinary prudence to hazard the security which possession of the wheat gave, by delivering it to the very party to whom his principal had directed him not to deliver it? It further appears that the defendant bank took no receipt from Smith & Co., showing that they held it as bailees, but left that to stand on the indorsement they made on the bills of lading in the hands of the masters of the vessels, and a simple acknowledgment of the receipt of the wheat by A. F. Smith & Co. on the same bills of lading. One of the firm of Smith & Co. swears that no warehouse receipt was given.

There was a plain course to be pursued, which involved no difficulty or trouble, namely, storing the wheat in some other elevator or warehouse until A. F. Smith & Co., on payment of the acceptances, should call for it. This course would not have involved a departure from their instruction not to deliver to Smith & Co. until the drafts were paid, and would have saved all parties from loss.

Some question is made in the argument as to the effect of proceedings taken by plaintiff to recover the wheat or its value of parties who bought or received it from A. F. Smith & Co. It is only necessary to say, if the jury shall be of opinion that defendant was negligent in delivering the wheat to A. F. Smith

& Co., it is responsible to plaintiff for the amount of the unpaid drafts, less any sum not actually recovered from others.

Without further comment, we are of opinion that there was evidence of negligence or want of due care on the part of defendant, which, taken in connection with the positive instruction of the plaintiff, should have been submitted to the jury. The judgment of the Circuit Court will, therefore, be reversed, with instructions to grant a new trial.

So ordered.

McCarthy v. Provost.

In a suit for partition, the value of the undivided part in controversy, and not of the lands, determines the appellate jurisdiction of this court.

Appeal from the Circuit Court of the United States for the District of Louisiana.

Mr. Thomas J. Semmes for the appellant.
Mr. Henry B. Kelly for the appellee.

Mr. Chief Justice Waite delivered the opinion of the court.

We have no jurisdiction in this case. The suit was brought to recover one two hundred and fortieth part of certain lands, and for a partition so as to set off to the appellant in severalty that interest. It is averred in the bill that "the value of the property sought to be partitioned amounts to more than $5,000," but the matter in dispute on this appeal is only one two hundred and fortieth part of the whole property, as that is all the appellant claims. Our jurisdiction, therefore, depends on the value of that part, which certainly is not shown to be more than $5,000.

Appeal dismissed.

YATES v. NATIONAL HOME.

The deputy-governor of the branch at Milwaukee of "The National Home for Disabled Volunteer Soldiers" was not permitted by its by-laws to contract for or receive, beyond his stated salary, compensation for services, which, at the request of the building committee of the board of managers, he rendered in the erection of the new buildings for the home at that place.

ERROR to the Circuit Court of the United States for the Eastern District of Wisconsin.

The facts are stated in the opinion of the court.

Mr. Luther S. Dixon for the plaintiff in error.

No counsel appeared for the defendant in error.

MR. JUSTICE HARLAN delivered the opinion of the court.

By the act of Congress of March 21, 1866, c. 21, the President of the United States, the Secretary of War, the Chief Justice of the United States, and such other persons as might thereafter be associated with them, according to the provisions of that act, were constituted a board of managers of an establishment for the care and relief of the disabled volunteers of the United States army, by the name of "The National Asylum for Disabled Volunteer Soldiers;" with power to take, hold, and convey real and personal property, and to make by-laws, rules, and regulations, not inconsistent with the laws of the United States, for carrying on the business and government of the asylum.

Authority was given to the board of managers, consisting of twelve persons, to procure suitable sites and to erect for military asylums the necessary buildings for all persons serving in the army of the United States at any time in the war of the Rebellion, who were not provided for by existing laws, and who had, or might thereafter, become disqualified from procuring their own maintenance and support by reason of wounds received or sickness contracted while in the line of their duty during the rebellion. The act further provides that the officers of the asylum shall consist of governor, deputy-governor, secretary, treasurer, and such other officers as the board of managers

may deem necessary, to be appointed from disabled officers serving as before mentioned, and removable by the board from time to time as the interests of the institution may require.

At a meeting of the board of managers held on the 12th of April, 1867, E. B. Wolcott and John S. Cavender, two of their number, were appointed a committee to select a plan for asylum buildings at Milwaukee, to make and accept proposals for the same, to superintend the construction, and to put the building then owned by the asylum in condition for immediate use. At the January meeting the president of the board was added to the committee. Shortly thereafter several building contracts were entered into, and the work of construction was commenced.

On the 28th of December, 1868, Yates, a disabled officer who had served in the Union army, and who was deputy-governor of the branch asylum at Milwaukee, addressed a communication to Cavender and Wolcott, from which it appears that he had theretofore purchased the materials, employed the labor, and directed the work for the new building, not included in the special contracts with mason, tin, and iron workers. Up to that date his services in that connection had been given gratuitously, but in consequence of the action of the board, whereby his duties and responsibilities were increased and his pay as deputy-governor reduced, he gave notice, in the same communication, that he would not assume or take any further responsibility for anything pertaining to the construction of the new building, unless the asylum, in consideration of his perfecting the plans, directing the work, employing the labor, purchasing materials, and putting the institution in proper working order, would pay him five per cent on all purchases and disbursements that had been or until the completion of the building might be made by him or under his direction, outside of contracts for masons, roofers, and steam-heater's works. Upon that communication, containing these propositions, Cavender and Wolcott, as "Building Com. Nat. Asylum," in good faith, we doubt not, but without any action upon the part of the board of managers, made and signed this indorsement: "Col. Theo. Yates will complete the work as proposed, and will be paid in the manner and to the amount herein named."

Yates claims in this action the sum of $8,414.96 for services performed by him under that agreement.

The court below gave a peremptory instruction to the jury to find for the defendant, which was done. Judgment was entered thereon. Yates sued out this writ.

We have not been favored with a brief on behalf of the defendant, but are informed by counsel for the plaintiff that the court below was of opinion that Yates was prohibited by the by-laws of the institution, of which he was an officer, from contracting for or receiving compensation for the services by him rendered. In that view we concur. One of the by-laws in force when the agreement was made provides that "the board shall fix such stated and sufficient salaries to any officer or agent of the establishment, payable in money, as they shall deem proper, which shall be in full for the services of the officer or agent, and not to be diminished during his term of office. No perquisites, fees, allowances, or advantages, other than his salary or stated pay, shall be permitted to *any* officer, agent, or employé of the establishment, under any pretence whatsoever." Another by-law declared that "the president of the board shall . . . approve all contracts, make and sign all requisitions," &c. If the appointment of Wolcott and Cavender as a committee with power to make and accept proposals for the new building, and to superintend its construction, authorized them, without consulting the board, or without the concurrence of its president, to make all contracts pertaining to the erection of that building, it by no means follows that they could make a binding contract with an officer of the institution, in conflict with its by-laws and whereby he could receive, in addition to his salary or stated pay, "perquisites, fees, allowances, or advantages." The manifest object of the by-law in question was to remove from the officers of the asylum, charged with the immediate conduct of its affairs, all possible temptation to so manage the institution as to derive pecuniary advantage therefrom beyond their respective salaries or stated pay.

It is contended that the plaintiff was not bound, in his capacity as deputy-governor, to perform any services whatever in connection with the construction of the new building. Were

this conceded, — as, perhaps, it must be, — he is confronted not only with the fact that he was an officer of the asylum, with a stated salary, but with an express prohibition, in the by-laws of the institution, against his receiving under any pretence whatsoever, perquisites, fees, allowances, or advantages other than his salary or stated pay. The evidence furnishes no reason to suppose that the board of managers were aware of, or ever recognized or approved the agreement of the building committee to compensate him for special services. The sole question, therefore, is whether the building committee had authority to contract with an officer of the institution that he should receive compensation or pecuniary advantages, beyond his salary, for the services in question. They clearly had not, and, without considering other questions argued by counsel, we approve, for the reasons given, the instruction to find for the defendant.

Judgment affirmed.

ARTHUR v. JACOBY.

/32-661

105 677
Led 454
146 73

1. A. imported certain pictures painted by hand on porcelain. When they are framed or in any manner set, the porcelain, which, being manufactured only as a ground upon which to obtain a good surface to paint, and not for any independent use, is obscured from view, constitutes of itself no article of chinaware, and forms no material part of their value. *Held*, that they are subject to the duty of ten per cent *ad valorem* prescribed by schedule M of sect. 2504 of the Revised Statutes, as paintings not otherwise provided for.
2. Where the bill of exceptions sets forth all the facts, and states that they were proved, this court, if the law arising upon them is for the plaintiff, will not reverse the judgment, because a peremptory instruction was given to return a verdict in his favor.

ERROR to the Circuit Court of the United States for the Southern District of New York.

The facts are stated in the opinion of the court.

Mr. Assistant Attorney-General Smith for the plaintiff in error.

Mr. Lewis Sanders and *Mr. George N. Sanders*, *contra.*

MR. CHIEF JUSTICE WAITE delivered the opinion of the court.

This was a suit to recover back duties paid under protest. The bill of exceptions stated it was proven at the trial that all the goods charged with the duties were "pictures painted by hand, and their value depended on the skill of the particular artist who painted them, and the porcelain ground on which they were painted was only used to obtain a good surface on which to paint, and was entirely obscured from view when framed or set in any manner, and formed no material part of the value of said painting on porcelain, and did not in itself constitute an article of chinaware, being manufactured simply as a ground for the painting, and not for any use independent of the paintings." The collector exacted a duty of fifty per cent *ad valorem* under the clause in schedule B, sect. 2504, Revised Statutes, relating to "china, porcelain, and parian ware, gilded, ornamented, or decorated in any manner," while the importer claims they were dutiable at ten per cent *ad valorem* only, under the clause in schedule M, which embraces "paintings and statuary not otherwise provided for." In other words, the collector claimed they were decorated china or porcelain ware, and the importer that they were paintings on china or porcelain. The evidence seems to have left no doubt on this subject, for it is expressly stated in the bill of exceptions to have been proved that the porcelain ground on which the painting was done "did not in itself constitute an article of chinaware." Such being the case, the painting which was done on it did not make it decorated chinaware. Confessedly the goods were paintings done by hand, and as it is not claimed they were "otherwise provided for" than as chinaware decorated, it follows the court was right in directing a verdict in favor of the importer for the difference between ten and fifty per cent. It is a matter of no importance in this case that the colors used were metallic, and that the pictures were baked to make the colors more firm. If the jury had found a verdict in favor of the defendant, the court should have set it aside as against what is admitted to have been proved. Under such circumstances a judgment will not be reversed on account of a positive instruction to find for the plaintiff. *Pleasants* v. *Fant*, 22 Wall. 116.

As the bill of exceptions states that the facts on which the case depends were proved, we cannot say that the admission in evidence of samples of "similar" importations on which duties had been paid at ten per cent could have prejudiced the collector's case. The question which the court decided was, that the goods were not chinaware, but paintings.

Judgment affirmed.

THACHER'S DISTILLED SPIRITS.

103-17

1. The regulation prescribed by the Commissioner of Internal Revenue, that "whenever any rectifier proposes to empty any spirits, for the purpose of rectifying, purifying, refining, redistilling, or compounding the same, he will file with the collector a notice or statement giving the number of casks or packages, the serial number of each, the number of wine and proof gallons in each, the kind of stamps and serial numbers of each, the particular name of such spirits as known to the trade, the proof, by whom produced, the district where produced, by whom inspected, and the date of inspection," is within the purview of the power conferred upon that officer by sect. 3249 of the Revised Statutes, "to prescribe rules and regulations to secure a uniform and correct inspection, weighing, marking, and gauging of spirits."
2. The ruling that when an act works the forfeiture of goods, the right of the government at once attaches to seize them whenever and wherever they may be found and assert the forfeiture, reaffirmed. *Henderson's Distilled Spirits*, 14 Wall. 44, cited and approved.

ERROR to the Circuit Court of the United States for the Southern District of New York.

The facts are stated in the opinion of the court.

Mr. Thomas Harland for the claimant.

Mr. Assistant Attorney-General Smith, contra.

MR. JUSTICE MILLER delivered the opinion of the court.

The case before us originated in an information filed in the District Court for the Southern District of New York against certain packages of distilled spirits by the district attorney, as forfeited by reason of a violation of the regulations of the Com-

missioner of Internal Revenue concerning the tax on distilled spirits.

Sect. 3249 of the Revised Statutes authorizes that officer "to prescribe rules and regulations to secure a uniform and correct inspection, weighing, marking, and gauging of spirits." One of the regulations established under this authority says that "whenever any rectifier proposes to empty any spirits for the purpose of rectifying, purifying, refining, redistilling, or compounding the same, he will file with the collector a notice or statement giving the number of casks or packages, the serial number of each, the number of wine and proof gallons in each, the kind of stamps and serial numbers of each, the particular name of such spirits as known to the trade, the proof, by whom produced, the district where produced, by whom inspected, and the date of inspection."

It is made the duty of the gaugers to inspect, brand, and stamp all spirits required by law to be inspected, of which returns are to be made daily in duplicate to the assessor and collector, containing a true account in detail on Form No. 59.

The information, after reciting the seizure of the spirits and alleging that they had formerly been owned by one Bensberg, alleges "that said Bensberg, while his ownership of said spirits continued, and with the purpose and intention of obtaining the issue to him of stamps for rectified spirits, to be placed upon certain other spirits upon which the tax had not been paid, and for the purpose of evading said tax, and enabling him to dispose of the latter mentioned spirits without compliance with any requirement of law respecting them, falsely made returns to the collector of the collection district aforesaid upon Form 122 aforesaid; that the spirits first above mentioned were emptied for rectification upon his premises aforesaid, and the stamps, marks, and brands thereupon effaced and obliterated, and that said Bensberg, then and there, by means of a bribe of money for that purpose, paid by said Bensberg to a certain United States gauger, who was then and there charged with the duty of inspecting the emptying of packages of spirits for rectification upon the premises aforesaid, and of making his certificate relating thereto as set forth in Form 122 aforesaid, and of making a report relating thereto

to said collector upon a form duly, by the commissioner aforesaid according to law, for that purpose prescribed, and known as Form 59, whereof a copy is hereto annexed and marked B, induced said gauger to make his certificate upon Form 122 as aforesaid, and the return upon Form 59 aforesaid, that the packages of spirits first above mentioned were emptied upon said premises, and the stamps, marks, and brands upon them effaced and obliterated, while in truth and in fact such returns, Forms 122 and 59, and said certificate, were wholly false, and said packages were not emptied, or said stamps, marks, or brands effaced or obliterated, but on the contrary thereof said packages were subsequently shipped and delivered to the claimant in this action, and said Bensberg then and there conveyed to said claimant all the right, title, and interest therein which he could convey in view of the facts hereinbefore alleged, against the form of the statutes of the United States in such case provided."

On demurrer to this information judgment was rendered for the United States in the District Court, which was affirmed on a writ of error by the Circuit Court.

The Revised Statutes, sect. 3451 is as follows: —

"Every person who simulates or falsely or fraudulently executes or signs any bond, permit, entry, or document required by the provisions of the internal revenue laws, or by any regulations made in pursuance thereof, or who procures the same to be falsely or fraudulently executed, or who advises, aids in, or connives at such execution thereof, shall be imprisoned for a term not less than one year nor more than five years, and the property to which such false and fraudulent instrument relates shall be forfeited."

It is objected by counsel for the claimant of the whiskey, that the regulation in question is unauthorized by the statute. But we see no just ground for such a proposition.

The internal revenue law is very specific in the details of that which is necessary to prevent fraud, especially in regard to the tax on whiskey and tobacco, and it was still found necessary to authorize the bureau which had charge of the collection of that tax to prescribe regulations for conducting the business of making and selling whiskey, and to adopt forms of

reports in the information which it must receive from the officers engaged in collecting the tax, and the parties who should pay the tax.

The rule in question seems to be a reasonable one and within the purview of the power conferred.

After all, the essence of the charge against Bensberg is that he defrauded the government out of the tax justly due, and that he did it by the fraudulent use of these forms and in violation of the regulations.

It is also urged that the offence which he committed had relation to the other whiskey on which he placed the stamps fraudulently obtained. The answer to this is, that while both packages were properly stamped, the fraud was committed in obtaining stamps on a false certificate of emptying the casks now seized, and a false certificate of the gauger to that effect in violation of the regulation on that subject. We are of opinion that it was in regard to the whiskey now seized that the false entry was made, and the forfeiture attached to it.

Though claimant's counsel sets up the innocence of the present claimant in regard to the fraud or any knowledge of it, it can hardly be necessary at this day to reconsider the doctrine that when the act has been done which the law declares to work a forfeiture of the property, the right of the government to seize the property, and assert the forfeiture, attaches at once and may be pursued by the government whenever and in whose hands soever that property may be found. *See Henderson's Distilled Spirits*, 14 Wall. 44.

Judgment affirmed.

WALNUT v. WADE.

367-541

108	683
L-ed	526
145	434
103	683
L-ed	526
149	142

143-679

1 A bill designated as "House Bill No. 231," and having for its title, "An Act to amend an act entitled 'An Act to incorporate the Illinois Grand Trunk Railway,'" regularly passed the House of Representatives of the General Assembly of Illinois. In its passage through the Senate "Illinois" was dropped from the title, and in the message of the House to the Senate and of the Senate to the House, reporting its passage by those bodies respectively, "Illinois" was left out of the title, but the designation as House Bill, No. 231 was retained. The journals show no amendment to the title. The bill as above entitled was signed by the presiding officer of each House. The Constitution of Illinois then in force provides that "every bill shall be read on three different days in each House, . . . and every bill having passed both Houses shall be signed by the speakers of their respective Houses." *Held*, that the act was duly and constitutionally passed.

2. The word "inhabitants," where it occurs in the first section of the act, means legal voters.

3. After the voters of a town have, at an election held pursuant to that act, voted in favor of a donation to aid in the construction of a railroad, the supervisor and clerk are the proper authorities to subscribe for the stock of the railroad company and issue the bonds of the township therefor.

4. A *bona fide* holder of the bonds is not bound to look beyond their recitals and the legislative enactment under which they were issued.

5. The fact that the coupons are made payable at a particular place does not make it necessary to aver or prove a presentation of them for payment there.

6. Coupons bear interest from their maturity, and, when severed from the bonds, are negotiable, and pass by delivery.

ERROR to the Circuit Court of the United States for the Northern District of Illinois.

The facts are stated in the opinion of the court.

Mr. William C. Goudy and *Mr. Allan C. Story* for plaintiff in error.

Mr. Thomas S. McClelland and *Mr. George A. Sanders* for the defendant in error.

MR. JUSTICE WOODS delivered the opinion of the court.

This suit was brought upon one thousand and ten coupons for ten dollars each, representing the annual interest on three hundred and twenty-one bonds for the sum of one hundred dollars each, purporting to be executed by the township of Walnut. It was claimed that the bonds were issued in aid of the

Illinois Grand Trunk Railway Company, and in payment of stock in that company subscribed for by the plaintiff in error and delivered to it.

The coupons bore the following numbers: From 1 to 200 inclusive, 258, and from 281 to 400 inclusive, and were cut from bonds bearing corresponding numbers.

Before final judgment in the court below the defendant in error took a nonsuit as to all coupons sued on bearing numbers from 301 to 400 inclusive, and withdrew the same from consideration by the court, and left, as the cause of action, only those coupons which bore numbers under 301.

The declaration set out a copy of one of the coupons sued on and averred that all the others were of the same tenor and effect except as to their numbers and date of payment respectively. The copy was as follows: —

"No. 251. Series 4, due January 1, 1875, for $10.

"$10.] WALNUT TOWNSHIP. [No. 251.

"*Railroad Bond.*

"Interest Warrant.

"Supervisor of Walnut Township pay to bearer, January 1, 1875, ten dollars, at the office of the State treasurer, Springfield, Illinois.

"WM. SANDERS, *Town Clerk.*
"M. KNIGHT, *Supervisor.*"

The parties waived a trial by jury and submitted the cause to the court upon the issues of fact as well as of law. The court made a special finding of facts, as follows: —

"*First*, That said defendant town, by its town clerk and supervisor, did, some time in the month of October, A. D. 1870, make its four hundred bonds for the sum of one hundred dollars each, and numbered consecutively from one to four hundred, inclusive, amounting in the aggregate to the sum of forty thousand dollars, said bonds bearing interest at the rate of ten per cent per annum, payable annually, and the principal thereof payable to the Illinois Grand Trunk Railway or bearer on the first day of January, A. D. 1881, and dated January 1, 1871, said interest being evidenced by ten interest-warrants or cou-

pons for ten dollars each, payable to bearer and attached to said bonds, as set out in the declaration in this case. That said bonds recited on their face that they were issued to said Illinois Grand Trunk Railway by authority of an act of the legislature of the State of Illinois, approved March 25, 1869, entitled 'An Act to amend an act entitled "An Act to incorporate the Illinois Grand Trunk Railway,"' and 'in pursuance of a vote of the people of said town, had and taken June 25, 1870,' being the same bonds described in plaintiff's declaration. That the coupons described in said declaration were cut from the first three hundred of said bonds, and are all due and unpaid.

"*Second*, That at some time in the month of January, A. D. 1871, the supervisor and town clerk of said town, acting for and in behalf of said town, subscribed for forty thousand dollars of the capital stock of said Illinois Grand Trunk Railway, and issued and delivered said four hundred bonds to said railway in payment of said subscription, and that within ten or fifteen days therefrom the said railway corporation sold said bonds for value, and applied the proceeds to the construction of its railroad through said town; and that said plaintiff, on the day of September, A. D. 1871, bought the bonds from which the coupons sued on were detached, and also all the coupons thereto attached and unpaid, in good faith, in the New York market, and paid therefor in money at the rate of ninety-two and one-half cents on the dollar, without actual notice of any defence whatever against said bonds or coupons.

"*Third*, That the said act of the legislature of the State of Illinois, approved March 25, 1869, entitled 'An Act to amend an act to incorporate the Illinois Grand Trunk Railway,' was duly and constitutionally passed by the General Assembly of said State of Illinois.

"*Fourth*, That the voters of said town, at an election duly called and held in said town, pursuant to the provisions of said act, on the twenty-fifth day of June, 1870, voted that said town would subscribe for thirty thousand dollars of the capital stock of said railway, and in payment therefor issue the bonds of said town for the amount of said stock, bearing ten per cent interest annually, and the principal sum payable in ten years from their date.

"That on the sixth day of August, 1870, at another election called and held in pursuance of the requirements of said act, the electors of said town voted to subscribe for ten thousand dollars of the capital stock of said railway, in addition to the thirty thousand dollars voted on the twenty-fifth day of June, 1870, to be paid for in bonds of said town, bearing the same rate of interest and payable at the same time as the bonds to be issued for said thirty thousand dollars subscription.

"*Fifth*, That the coupons offered in evidence and upon which judgment is rendered in this case were cut from bonds of said issue numbered from one to three hundred."

Besides this special finding the record contained a bill of exceptions which embodied all the evidence submitted by both parties in the case.

Upon the special finding the court rendered judgment for the plaintiff below for the principal sum due on the coupons, and for interest thereon from the date when they were payable respectively.

The alleged act of the legislature, by authority of which it was claimed the bonds were issued, is as follows: —

"An Act to amend an act entitled 'An Act to incorporate the Illinois Grand Trunk Railway.'

"SECTION 1. Be it enacted by the people of the State of Illinois, represented in the General Assembly, that any city, incorporated town, or township which may be situated on or near the route of the Illinois Grand Trunk railway, west of the city of Mendota, *via* Prophetstown, to the Mississippi River, may become subscribers to the stock of said railway, and may issue bonds for the amount of such stock so subscribed, with coupons for interest thereto attached, under such limitations and restrictions and on such conditions as they may choose, and the directors of said company may approve the proposition for said subscription, having been first submitted to *the inhabitants* of such city, town, or township, and *approved by them;* and upon application of any ten voters of any city, town, or township, as aforesaid, specifying the amount to be subscribed, and the conditions of such subscription, it shall be the duty of the clerk of such city, town, or township immediately to call an election, in the same manner that other elections for said city, town, or township are called, for the purpose of determining whether said city, town, or township will subscribe to the stock of said railway; and if a majority

of said votes shall be 'for subscription,' then the corporate authorities of said city, town, or township, and the supervisor and town clerk of said township so voting, shall cause said subscription to be made; and upon its acceptance by the directors of said company shall cause bonds to be issued in conformity with said vote, which bonds shall not be of less denomination than one hundred dollars, and in no case bear a higher rate of interest than ten per cent, provided no such election shall be held until at least thirty days' previous notice thereof shall be given in the manner prescribed by law.

"SECT. 2. It shall be the duty of the proper authorities of any city, town, or township, issuing bonds as aforesaid, to make all necessary arrangements, and provide for the prompt payment of all interest and other liabilities accruing thereon, and to levy such taxes as may be necessary therefor as other taxes are levied by them.

"SECT. 3. This act shall be liberally construed for the purposes intended and expressed therein, and shall be held to be a public act, and shall be in force from and after its passage." Approved March 25, 1869.

This act was passed while the Constitution of Illinois of 1848 was in force.

That Constitution contained the following provision (sect. 23 of art. 3): —

"Every bill shall be read on three different days in each House . . . and every bill having passed both Houses shall be signed by the speakers of their respective Houses; and no private or local law which may be passed by the General Assembly shall embrace more than one subject, and that shall be expressed in the title."

On July 2, 1870, a vote was taken by the voters of the State of Illinois, which resulted in the adoption of a new constitution and of certain separate articles, one of which reads as follows, and it took effect that day: —

"No county, city, town, township, or other municipality shall ever become subscriber to the capital stock of any railway or private corporation, or make donation to or loan its credit in aid of such corporation: *Provided, however*, that the adoption of this article shall not be construed as affecting the right of such munici-

pality to make such subscriptions where the same have been authorized under existing laws by a vote of the people of such municipalities prior to such adoption."

The first assignment of error relates to the finding of the court, that the act by authority of which the bonds in question were issued "was duly and constitutionally passed." The plaintiff in error disputes this finding.

A question arises here whether this finding is open to challenge.

One thing is clear, that there can be no review in this court of the finding of fact made in the court below.

Sect. 649 of the Revised Statutes declares: "The finding of the court upon the facts, which may be either general or special, shall have the same effect as the verdict of a jury."

The office of a bill of exceptions, where the facts are tried by the court, is pointed out by sect. 700, Revised Statutes: "The rulings of the court in the progress of the trial of the cause, if excepted to at the time and duly presented by a bill of exceptions, may be reviewed by the Supreme Court upon a writ of error or upon appeal, and when the finding is special the review may extend to the determination of the sufficiency of the facts found to support the judgment."

In *Norris* v. *Jackson* (9 Wall. 125), this court said: "A special finding is not a mere report of the evidence, but a statement of the ultimate facts on which the law of the case must determine the rights of the parties; a finding of the propositions of fact which the evidence establishes, and not the evidence on which those ultimate facts are supposed to rest. . . . Whether the finding be general or special, it shall have the same effect as the verdict of a jury; that is to say, it is conclusive as to the facts so found. . . . In the case of a special verdict [finding] the question is presented as it would be if tried by a jury, whether the facts thus found require a judgment for plaintiff or defendant. . . . The bill of exceptions, while professing to detail all the evidence, is no special finding of the facts."

It is thus seen that the only use which can be made of the bill of exceptions, when there is a special finding of facts, is to present the rulings of the court in the progress of the trial

upon questions of law. The facts are conclusively settled by the finding of the court.

But the finding under consideration is not a finding of fact but of law. The question whether an alleged statute "is really a law or not, is a judicial one, and is to be settled and determined by the court and judges, and is not a question of fact to be determined by a jury." *Town of South Ottawa* v. *Perkins*, 94 U. S. 260; *Gardner* v. *The Collector*, 6 Wall. 499.

So, notwithstanding the finding of the court below, the question whether the act of March 25, 1869, was duly and constitutionally passed, is, as one of law, open for examination here, — the decision of the court on it having been excepted to at the proper time. And in deciding it, not only the facts presented by the bill of exceptions, but any other accessible competent evidence may be considered.

The plaintiff in error insists that the evidence set out in the bill of exceptions does not sustain the finding under consideration; in other words, that there is error in law in the holding of the court, that upon the facts disclosed the statute in question was duly and constitutionally passed.

It is settled by the decisions of the Supreme Court of Illinois that the journals of the legislature may be resorted to for the purpose of overthrowing the *prima facie* evidence of the constitutional enactment of a law furnished by the signatures of the presiding officers of the two Houses. *Town of South Ottawa* v. *Perkins*, *supra*, where those decisions on this subject are collected.

Both parties upon the trial in the court below introduced the journals of the two Houses of the Illinois legislature, — one to prove and the other to disprove the constitutional passage of the law. From this evidence it appears that the bill in question when introduced into the House was designated and distinguished as House Bill No. 231, and with the title "An Act to amend an act entitled 'An Act to incorporate the Illinois Grand Trunk Railway.'" It regularly passed the House with this title, having been read three times on three different days and having been referred to and reported by a committee.

In the Senate, according to the journals, the proceedings were as follows: On February 8, a message was received from the House to the effect that it had passed House Bill No. 231, entitled an act to amend an act entitled "An Act to incorporate the Grand Trunk Railway." On February 9, the bill with the same number and title was read the first and second time and referred to a standing committee. On March 4, House Bill No. 231, for "An Act to amend an act entitled an act to incorporate the Illinois Grand Trunk Railway," was reported back with amendments by the committee, to which House Bill No. 231 had been referred, which recommended that as amended it be read a third time and passed. The next day House Bill No. 231, and with the same title, except that the word "Illinois" was omitted therefrom, was read a third time and passed.

The Senate amendments to House Bill No. 231, with the same title as that under which it passed the House, were agreed to by the House. In the messages between the two Houses, in which the passage of the bill by each is reported to the other, the word "Illinois" is omitted from the title, but its designation as House Bill No. 231 is preserved. The bill, after its final passage, was enrolled as House Bill No. 231, with the title, "An Act to amend an act to incorporate the Illinois Grand Trunk Railway," and it was signed by that title by the presiding officers of both Houses and approved and signed by the governor.

We are now called on to decide whether upon this evidence the court below was justified in holding that the act was duly and constitutionally passed.

The evidence discloses the fact that in its passage through the Senate, according to the journal of that body, the word "Illinois" was twice dropped from the title of the bill, and that in the message of the House to the Senate and of the Senate to the House reporting the passage of the bill by those bodies respectively, the word "Illinois" is left out of the title of the bill.

The contention of the plaintiff in error is that the omission of the word "Illinois" from the title of the bill in several of its stages in the Senate, and especially in its final passage,

defeats it as a law and renders the enactment null and void. The ground of this claim is that, according to the journals of the two Houses, "one bill by one title passed the House and another bill by another title passed the Senate."

The evidence of the journals of the two Houses satisfies us that beyond question there was but one bill, and that was House Bill No. 231, "to amend an act entitled an act to incorporate the Illinois Grand Trunk Railway;" that this bill regularly passed through all stages by both Houses without any change in its title, was signed by their presiding officers respectively, and was approved and signed by the governor.

The journals show no amendment to the title of the bill in either House. It is, therefore, perfectly clear that the omission of the word "Illinois" from the title in some of the stages of its passage through the Senate was a mere clerical error in keeping the journals. The designation of the bill as House Bill No. 231 was preserved in all the stages of its passage through both Houses, and until it was finally signed by the presiding officers of the two Houses and approved by the governor. The statute-book of the State of Illinois shows that only one act was ever passed to incorporate any "Grand Trunk Rail way" and that was the act to incorporate the Illinois Grand Trunk Railway. Therefore the act in question must have been an amendment to that act of incorporation, and could be an amendment to no other.

The fact of the identity of the bill passed by the two Houses is so clear that it seems to us no court could have any doubt on the subject.

In the case of *Larrison* v. *Peoria, Atlanta, & Decatur Railroad Co.* (77 Ill. 11), it appeared that by some clerical error the bill was introduced into the Senate as "Senate Bill No. 453, for an act to incorporate the Peoria, Atlanta, & *Danville* Railroad Company," thus changing the name of Decatur, in the title, to Danville; but as the bill preserved its identity by holding its number, "453," the Supreme Court of Illinois decided that the act was constitutionally passed. It said: —

"And the question is, was the bill for the act read three times in the Senate before its passage by that body? If the entries on the journal refer to the same bill, then the require-

ments of the organic law are satisfied. The question is one of identity. Do these entries show there was one or two bills acted upon by the Senate? The number is the same throughout. About that there is not the pretence of the slightest doubt, and it is manifest that to have more than one bill pending at the same time, with the same number, would lead to confusion; it would defeat the very object of numbering bills, which is to preserve their identity and prevent confusion."

Another objection, based on the fact that the journals do not preserve the exact title of the bill in all the stages of its passage through the Senate, is that the title did not at all times conform to the constitutional requirement that the subject of the bill should be expressed therein.

There is no rule of parliamentary law, and there is no provision of the Constitution of Illinois, which requires a bill to preserve the same title through all its stages in both Houses. *Larrison* v. *Peoria, Atlanta, & Decatur Railroad Co.*, *supra*; *Binz* v. *Weber*, 81 Ill. 288; *Plummer* v. *People*, 74 id. 361. But, as already said, it is sufficiently clear from the journals of the two Houses that no change whatever was made in the title of the bill in either House, and that the omission of the word "Illinois" from the title, as given in the journals of the Senate, was a mere clerical error, which could deceive or mislead no one. We are of opinion that these objections to the act are slender grounds for declaring to be null and void a law which appears on the statute-book of a State, and is found among its archives.

It is next insisted that the title of the act, as it appears upon the statute-book of the State, does not express its subject.

The Supreme Court of Illinois has substantially decided this point against the plaintiff in error in the case of *Belleville Railroad Co.* v. *Gregory*, 15 Ill. 20. See also *Unity* v. *Burrage*, *supra*, p. 447, where other cases decided by the Supreme Court of Illinois, on this question, are cited. *San Antonio* v. *Mehaffy*, 96 U. S. 312.

We are clear, therefore, that the Circuit Court was right in holding that the act, by authority of which the bonds in question were issued, was duly and constitutionally passed.

It is next contended by the plaintiff in error, that, under the

act referred to, the corporate authorities of the township alone could make the subscription to the stock of the railroad company and issue the bonds of the township. This claim is based on sect. 5, art. 9, of the Constitution of Illinois of 1848, which prohibits the legislature from authorizing any person to impose a burden of debt on the township, except the corporate authorities.

The stock was subscribed and the bonds were issued in this case by the supervisor and clerk, and it is insisted that neither the act of the legislature nor the Constitution of the State allowed this to be done; that it could only be done by the corporate authorities, which included the legal voters as well as the supervisor and clerk.

In construing a similar statute, passed under the Constitution of 1848, the Supreme Court of Illinois has decided that, after a vote by the electors of a township in favor of a donation to aid in the construction of a railroad, the supervisor and clerk of the township were the proper corporate authorities to subscribe for the stock of the company, and issue the bonds of the township therefor. *Town of Windsor* v. *Hallett*, 97 Ill. 204; *Town of Douglass* v. *Niantic Savings Bank* (not yet reported).

These cases are conclusive of this question, if, indeed, it needed any authority to settle it.

The next point made by the plaintiff in error is that the act of March 25, 1869, by authority of which the bonds were issued, did not authorize an election to be held on the question of subscribing stock in the railway company, at which only legal voters should vote; that the word "inhabitants," whose approval the act requires, cannot be construed to mean "voters" or "electors."

No copy of the bonds appears in the pleadings in this case. The special finding of the court, to which alone we are authorized to look to ascertain the facts upon which the judgment of the court rests, declares that the bonds recite on their face that they are issued "in pursuance of a vote of the *people* of said town, held and taken June 25, 1870."

The popular signification of the words "people of a town" and "inhabitants of a town" is the same; so that, according to the finding of the court, the bonds recited on their face a

substantial compliance with the requirement of the statute that the proposition for the subscription to the stock of the railroad company should be submitted to the "inhabitants of the town and affirmed by them." The plaintiff being, as appears from the findings of the court, a *bona fide* holder of the bonds without notice, is not bound to go behind this recital.

But it is not necessary, in order to maintain the validity of the bonds, to rely on this finding.

The findings of the court show that the "voters" of said town, on June 25, 1870, voted in favor of the proposition to subscribe $30,000 to the stock of the said railroad company.

We think that, by a fair construction of the act, this was all that was necessary. The act, it is true, requires the approval of the "inhabitants" of the town. In its broadest sense this would include all sexes, ages, and conditions. To require the approval by a vote of the "inhabitants" in this sense would be an absurdity. The act itself is its own interpreter, and shows that this is not its meaning. It provides that, upon the application of ten voters, it shall be the duty of the clerk "to call an election, in the same manner that other elections for said city, town, or township are called, for the purpose of determining whether said city, town, or township will subscribe to the stock of said railway."

The calls for "other elections for said city, town, or township" are addressed to the legal voters, and legal voters only are allowed to vote. The act, though carelessly drawn, clearly meant to restrict the election to the voters, and the approval of the "inhabitants" was to be indicated by the vote of a majority of the legal voters. This approval the finding of the court shows was obtained.

The intimation that the law required two elections for precisely the same purpose, one at which the inhabitants, and the other at which the electors, of the town should vote, imputes to the General Assembly an absurdity in legislation which the language of the act utterly fails to justify.

We think, therefore, that this assignment of error is without substantial ground to rest on.

It appears from the finding of the court that an election was held on June 25, 1870, on the proposition to subscribe

$30,000 to said railroad company. The plaintiff in error claims that this proposition was never approved by the directors of the company, and, therefore, that the bonds issued to carry this proposition into effect were issued without authority, and are, therefore, invalid.

There are two answers to this claim: 1. The act of March 25, 1869, does not require the approval of the directors of the company to the proposition as a condition precedent to the subscription of stock and the issue of bonds. 2. The court finds that the bonds contained recitals averring that they were issued by authority of the act of March 25, 1869, and in pursuance of a vote of the people of said town, which is in effect an averment that the conditions prescribed by said act to be performed before said bonds could be issued had been in fact performed. Whether the conditions precedent had been complied with was a question which was in effect left by the law to the "corporate authorities" who issued the bonds, to decide. The plaintiff, therefore, being a *bona fide* holder, was not bound to look beyond the legislative act and the recitals in the bonds. *Town of Coloma* v. *Eaves*, 92 U. S. 484; *Marcy* v. *Township of Oswego*, id. 637.

The bill of exceptions shows that the plaintiff in error objected to the admission in evidence of the coupons sued on, because, 1, they were not presented to the proper officers or demand of payment made thereon and notice given to the drawers before suit; 2, because they were detached from and not annexed to any bond, and the absence of the bond was not accounted for, and the same were not negotiable paper sufficient to base an action upon; and, 3, because said coupons never were indorsed and are not negotiable by delivery.

None of these grounds of objection are tenable. The form of the coupons does not change their nature. They are evi dences of the sums due for interest on the bonds. The fact that they are made payable at a particular place does not make a presentation for payment at that place necessary before a suit can be maintained on them. *Wallace* v. *McConnell*, 13 Pet. 136; *Irvine* v. *Withers*, 1 Stew. (Ala.) 234; *Montgomery* v. *Elliott*, 6 Ala. 701.

The second and third grounds of objection are answered by

the decision of this court in *Clark* v. *Iowa City* (20 Wall. 583), where it is said: "Coupons for instalments of interest when severed from bonds are negotiable and pass by delivery. They then cease to be incidents, and become in fact independent claims, and they do not lose their validity if for any cause the bonds are cancelled or paid before maturity, nor their negotiable character, nor their ability to support separate actions." See also *Aurora City* v. *West*, 7 id. 82; *Thompson* v. *Lee County*, 3 id. 327.

It is next alleged for error that the Circuit Court allowed interest on the coupons sued on to be included in the judgment.

The coupons bore interest from the day when they were payable. *Aurora City* v. *West*, *supra*; *Clark* v. *Iowa City*, *supra*; *Town of Genoa* v. *Woodruff*, 92 U. S. 502.

There is nothing in the act authorizing the issue of the bonds to which the coupons belonged that takes them out of these decisions. And we have been referred to no legislation in the State of Illinois which forbids the allowance of interest on this kind of commercial paper.

The failure to present the coupons for payment does not prevent the running of interest. If the town had shown that it had money ready to pay the coupons at the time and place where they were payable, this would have been a defence to the claim for interest. *Wallace* v. *McConnell*, *supra*. But no such proof was offered, nor was it claimed that the fact existed.

Finally, the fact that the corporate authorities of the plaintiff in error issued bonds to the amount of $40,000, when the election held on June 25, 1870, only authorized the issue of $30,000, can have no effect on the rights of the defendant in error to his judgment in this case. The finding of the court is, that his bonds recited on their face that they were issued by authority of the act of March 25, 1869, and in pursuance of the vote taken June 25, 1870.

There was nothing in the act which placed any limit to the amount of stock which the town might subscribe, and the recitals of the bonds gave no notice to the holder that the bonds issued exceeded the amount of stock which the town had voted to subscribe. There was nothing to arouse the suspicions of a

purchaser; nothing to put him on inquiry. As the defendant in error is a *bona fide* holder for value, the fact that the amount of the bonds issued by the corporate authorities exceeded by $10,000 the amount of stock voted for by the inhabitants June 25, 1870, can have no influence upon his right to a recovery upon the bonds which he holds.

We find no error in the record.

Judgment affirmed.

OHIO v. FRANK.

1. The rulings in *Walnut* v. *Wade* (*supra*, p. 683) reaffirmed.
2. The court enforces the ruling of the Supreme Court of Illinois, that a note given in that State for a sum of money at a stipulated rate of interest not exceeding ten per cent per annum bears that rate as long as the principal remains unpaid.

ERROR to the Circuit Court of the United States for the Northern District of Illinois.

The facts are stated in the opinion of the court.

Mr. William C. Goudy and *Mr. Allan C. Story* for the plaintiff in error.

Mr. J. H. Roberts and *Mr. Shelby M. Cullom* for the defendant in error.

MR. JUSTICE WOODS delivered the opinion of the court.

This was an action upon bonds issued by the town of Ohio, the plaintiff in error, and upon certain unpaid coupons attached to them. The bonds were issued by authority of the act of the legislature of Illinois of March 25, 1869, referred to in *Walnut* v. *Wade*, *supra*, p. 683. That case decided every question raised in this except one, which relates to the matter of interest on the bonds.

That interest was at the rate of ten per cent per annum. In entering judgment the court below included interest upon the bonds at that rate from their maturity until the date of the judgment. This was assigned for error because there was no

agreement in the bonds to pay interest after maturity. It was claimed that no interest at all should have been allowed on them after they fell due, but that if any interest was allowed it should have been computed only at the rate of six per cent per annum, which is the legal rate in Illinois.

At the date of the bonds sued on the law of Illinois fixed the rate of interest at six per cent per annum where it was not settled by the contract, but allowed parties to contract for any rate not exceeding ten per cent per annum.

No authority is cited in support of the proposition that no interest should have been allowed on the bonds after their maturity.

The plaintiff in error relies upon the case of *Holden* v. *Trust Company* (100 U. S. 72), to support the claim that only six per cent interest should have been computed on the bonds after their maturity.

That case arose in the District of Columbia, where substantially the same regulations on the subject of interest were prescribed by statute as in Illinois. The court in that case said: "The rule heretofore applied by this court, under the circumstances of this case, has been to give the contract rate up to the maturity of the contract, and thereafter the rate prescribed for cases where the parties themselves have fixed no rate." But the court added: "When a different rule has been established it governs of course in that locality. The question is always one of local law."

A different rule has been established in Illinois by the decisions of the Supreme Court of that State. In *Phinney* v. *Baldwin* (16 Ill. 108), it was held that a note given for a sum of money, bearing interest at a given rate per month, continues to bear that rate of interest as long as the principal remains unpaid.

This rule was followed by the court below in computing the amount of the judgment in this case.

Judgment affirmed.

THE "CIVILTA" AND THE "RESTLESS."

1. A steam-tug making between seven and eight knots an hour was towing a ship by a hawser leading astern two hundred and seventy feet. The course which they were sailing crossed that of a schooner moving at the rate of from two to three knots an hour at a point just ahead of the tug, or between her and the ship. The schooner had a competent man at her wheel and a lookout, both of whom did their duty faithfully. Her lights were properly set and brightly burning, and she kept her course about northeast. There was a pilot upon the ship, to whose orders the tug was subject. He, however, gave none. The tug did not slow her engine until the schooner was up to her, nor stop it until the schooner was about to strike the hawser. The course of the tug and the ship had then been changed about a point to the south. The ship struck the schooner on her port side, at about the fore-rigging, and sunk her. *Held*, that the ship and the tug, being in contemplation of law but one vessel under steam, were bound to keep out of the way of the schooner, and are liable for the damages which she sustained.
2. The form of decree sanctioned in *The Alabama and the Gamecock* (92 U. S. 695) approved.

APPEALS from the Circuit Court of the United States for the Southern District of New York.

The facts are stated in the opinion of the court.

Mr. William Allen Butler for the "Civilta."
Mr. Lucius E. Chittenden for the "Restless."
Mr. Robert D. Benedict, contra.

MR. CHIEF JUSTICE WAITE delivered the opinion of the court.

This is a suit for damage by collision, begun by the owners and master of the schooner "Magellan" against the ship "Civilta" and the tug "Restless." The libel alleges that the schooner was heading about northeast, having her booms on her port side, and making about two and a half or three knots an hour, and that "the tug was towing the ship at the rate of about eight or nine knots an hour and headed for the schooner until she was very near to her, when she suddenly sheered to port across the bows of the schooner and just cleared her, but brought the ship down on the schooner."

The answers both of the tug and the ship state that the

course of the tug with the ship following in her wake was southwest, and that of the schooner about northeast, which if kept would have carried her at a safe distance on the starboard side of the tug and ship; that the tug and ship kept steadily on their course, until the tug passed the schooner, when the schooner suddenly kept away to the right between the tug and the ship, ran on to the hawser, and was sunk. In this way was presented the principal issue of fact in the case.

The findings were substantially as follows: The tug was towing the ship from New Haven to New York by a hawser about two hundred and seventy feet long, leading astern from the tug. The ship had on board a pilot and the tug was subject to his orders. The night was clear and pleasant and lit by the moon. The wind was light and a little to the west of south. The ship and tug were going between seven and eight knots an hour. The collision occurred a little to the westward of Sand's Point.

The schooner was bound to Boston. She was sailing free with her booms off to port, and was making from two to three knots an hour. Her lights were properly set and burning brightly, as required by law. She had a competent man at her wheel and a competent lookout, and each of them faithfully performed his duty. Her course was about northeast, and it was not changed before the collision.

The ship and tug were seen by those on the schooner bearing a little on their port bow, and the schooner was seen by those on the ship and tug bearing a little on their starboard bow. The courses of the schooner and the ship and tug crossed each other just ahead of the tug or between the tug and the ship. The tug did not slow her engine until the schooner had got up to her, and did not stop till the schooner was just striking the hawser. The tug did not change her course until the schooner was up to her or nearly so, and the tug and ship had changed their course about a point to the south before the collision.

The ship struck the schooner on her port side at about the fore-rigging and sunk her. The lights of the schooner were not observed by those on board the tug or those on board the

ship, and those on board the tug and ship mistook the course of the schooner. The pilot on the ship gave no orders to the tug.

Upon these facts the court below gave a decree against both the ship and tug and apportioned the damages, one-half to each, with a provision that if either of the vessels should prove insufficient to pay its share the residue might be collected from the other.

The ship and the tug have taken separate appeals.

It was substantially conceded in the argument that upon the findings the schooner is entitled to recover her damages either from the ship or the tug. The effort of each of the respondents has been to throw on the other the entire responsibility for the loss. On the part of the tug, however, it was contended that the findings do not meet the issues raised by the pleadings, but in this we think counsel are in error. It is quite true the finding is that the courses the vessels were on crossed each other just ahead of the tug, or between the tug and the ship, when there is no express averment to that effect either in the libel or the answer, but the finding is certainly not inconsistent with anything that is alleged. A southwest course would be parallel with a northeast course, and the two could not cross; but in the libel it is averred that the schooner was heading about northeast. Such, also, is the statement in the answers, and the finding is the same. A course which varied even a little from northeast might cross one that was southwest. The libel charges the tug with suddenly sheering to port, while the tug and ship say the schooner suddenly kept away to the right. The finding is that the schooner did not change her course, and that the ship and tug only went off their course one point to the south. Upon the findings the collision seems to have occurred because the original courses crossed each other with the vessels in dangerous proximity, and not because of a sudden change of course by the tug as alleged. This we think sufficient.

Upon the findings as they stand we think the decree below was right. The ship and the tug were in law one vessel, and that a vessel under steam. It was their duty, therefore, to keep out of the way. Whether the one vessel, which the two

constituted for the purposes of the case, was the ship, or the tug, or both, is the important question.

The tug furnished the motive power for herself and the ship. Both vessels were under the general orders of the pilot on the ship, but it is expressly found as a fact that the tug actually received no orders from him. Being on the ship, which was two hundred and seventy feet astern of the tug, it is not to be presumed that he was to do more than direct the general course to be taken by the ship in getting to her place of destination. The details of the immediate navigation of the tug, with reference to approaching vessels, must necessarily have been left to a great extent to those on board of her. She was where she would ordinarily see an object ahead before those on the ship could, and having all the motive power of the combined vessels under her own control, she was in a situation to act promptly and do what was required under the circumstances. That this was expected is clearly shown by the fact that down to the time of the collision the pilot on the ship had found no occasion to direct her movements. Her own pilot or master seems to have managed the navigation satisfactorily. We do not entertain a doubt that, situated as the tug was, in the night, so far away from the ship, it was her duty to do what was required by the law of a vessel under steam, to keep herself and the ship out of the way of an approaching vessel, particularly if the pilot of the ship did not assume actual control for the time being of the navigation of the two vessels.

Such being the case, we think it clear both vessels were in fault. Both mistook the course of the schooner, and neither those on the ship nor those on the tug observed the lights on the schooner, although they were properly set and burning brightly. It was for this reason undoubtedly that neither those on the ship nor those on the tug took any steps in time to avoid the collision. They evidently thought the course they were on would take them by in safety, until it was too late. Both vessels were responsible for the navigation, as has already been seen: the ship because her pilot was in general charge, and the tug because of the duty which rested on her to act upon her own responsibility in the situation in which she was placed. The tug was in fault because she did not on her own

motion change her course so as to keep both herself and the ship out of the way; and the ship because her pilot, who was in charge both of ship and tug, neglected to give the necessary directions to the tug, when he saw or ought to have seen that no precautions were taken by the tug to avoid the approaching danger. Had either the ship or the tug done its duty under the circumstances, there could have been no collision.

The decree is in the form sanctioned by this court in *The Alabama and the Gamecock*, 92 U. S. 695.

Decree affirmed.

RAILROAD COMPANY *v.* UNITED STATES.

A., a railroad company, in the execution of its contract with the government, carried the mails from P. to F., the route being partly over its own road and partly over a portion of the road of company B., which also had a contract for carrying the mails over its entire line. After the passage of the act of March 3, 1873, c. 231, the Post-Office Department made frequent adjustments of the amount due to the respective companies, which was from time to time received without protest or objection. B. having received the amount due for conveying all the mails over its road, although over a part of it a portion of them had been carried by A. under its contract, the latter brought suit against the United States to recover compensation for the portion so carried. *Held*, that A.'s acquiescence in the adjustments precluded the maintenance of the suit.

APPEAL from the Court of Claims.

The facts are stated in the opinion of the court.

Mr. John F. Farnsworth for the appellant.

The Solicitor-General, contra.

MR. JUSTICE MILLER delivered the opinion of the court.

The Philadelphia and Baltimore Central Railroad Company brought suit in the Court of Claims for the amount which it asserted to be due for carrying the mails between the city of Philadelphia and Chester, from July 1, 1873, until March 31, 1877, and recovered a judgment for what was claimed as to all the time mentioned except the period between July 1, 1873, and December, 1875.

The service was rendered under a contract to carry by rail

the mails from Philadelphia to Port Deposit, in the State of Maryland. Part of the road over which they were carried lies between Philadelphia and Chester, and it belonged to the Philadelphia, Wilmington, and Baltimore Railroad Company. This latter company also carried mails over its own road between these points and continuously to Baltimore.

After the passage of the act of March 3, 1873, c. 231, the Postmaster-General required all the mails carried over these routes to be weighed, and made repeated adjustments of the sums due to each company, and the amounts so found were paid, and received without objection or protest from July 1, 1873, to Dec. 4, 1875. At that date the claimant notified the Postmaster-General that he had not been paying it enough, — in fact, had only been paying it for the distance between Chester and Port Deposit. It turned out that the Philadelphia, Wilmington, and Baltimore Railroad Company had been receiving the compensation for all the mails carried over its road between Philadelphia and Chester, though the claimant had the contract for so much of them as went from Philadelphia to Port Deposit and intermediate points. The Postmaster-General insisted that he was right, and refused to pay the claimant, though the mails were still carried under the then existing contracts until March 31, 1877.

The Court of Claims found in favor of the claimant, and rendered judgment for the sum due after the notification and demand of Dec. 4, 1875, but held that the company was estopped by its acquiescence in the adjustments and the payments it had received without objection or protest, from July 1, 1873, to that period. The claimant appealed.

In this we think the Court of Claims was right. It must be held to have known on what basis of weight and distance these adjustments were made. They were made frequently, and the sums which, by those adjustments, were due to each company were paid monthly or quarterly.

If the claimant, during all this time, stood by contentedly and saw the money which it now claims paid to the other company, and received and receipted for the money paid it on that foundation, it would be inequitable to permit it now to recover, and thus make the government pay twice. For the time the

mails were carried after this notice or assertion of the present claim it has recovered judgment, and the government has not appealed. For what it lost by its neglect in making claim on these settlements when receiving payment, it must submit to loss.

Judgment affirmed.

DISTRICT OF COLUMBIA *v.* CLUSS.

1. In 1870, the Board of Trustees of Colored Schools for the District of Columbia had authority to employ an architect to prepare the plans and specifications for a school-house in Washington, and superintend its construction, and could, as the agent of the District, bind it to pay him for his services.
2. The disallowance of his claim by the board of audit constituted by the act of June 20, 1874, c. 337 (18 Stat., pt. 3, p. 116), does not bar his right of recovery.
3. The corporation which the act of Feb. 21, 1871, c. 62 (16 Stat. 419), created by the name of the District of Columbia succeeded to the property and liabilities of the corporations which were thereby abolished.

ERROR to the Supreme Court of the District of Columbia.

The facts are stated in the opinion of the court.

Mr. Albert G. Riddle for the plaintiff in error.

Mr. Enoch Totten, contra.

MR. JUSTICE FIELD delivered the opinion of the court.

In 1870, the Board of Trustees of Colored Schools for the District of Columbia employed the plaintiff, who is an architect by profession, to prepare the plans and specifications for a school-house in Washington, and to superintend its construction, agreeing to give him for his services five per cent on the cost of the building. This was the ordinary rate of charge as compensation for similar services in the District. In 1872, the building was constructed, and cost about $66,000. The board of trustees approved of the work, and paid the plaintiff $1,100 in cash, and gave him a voucher for $2,155 more, being for the balance due, and also the sum of $255 for services in superintending repairs upon other buildings. This voucher the plain-

tiff sold and delivered to the Freedman's Savings and Trust Company, for whose benefit this action is brought.

The Board of Trustees of Colored Schools has since been abolished, and a new board organized to take charge of all the public schools, whether of white or colored children. But when the original board existed it was the agent of the District for the purposes intrusted to it, and could bind the District for the services rendered by the plaintiff. The building constructed, and the other buildings upon which the repairs were made under his superintendence, belong to the District and are used by it for colored schools, yet the amount due him for which the voucher was given has never been paid. The jury were of opinion that the District should pay it, and we agree with them.

The disallowance of the claim by the board of audit, if such had been allowed to be proved, would not have concluded the plaintiff. That board was not a judicial body, whose action was final; it exercised little more than the functions of an accountant. A claim allowed by it was not necessarily a valid one; a claim disallowed was not, therefore, illegal. Its action either way left the matter open to contestation in the courts.

Though the contract of the plaintiff with the board of trustees was made before the act creating the District into one municipal corporation, the work was not completed until afterwards, when it was accepted and approved. The new corporation succeeded to the property of the two former ones, and also to their liabilities.

Judgment affirmed.

SCHOOL DISTRICT *v.* INSURANCE COMPANY.

The act of the legislature of Nebraska approved Feb. 2, 1875, entitled "An Act authorizing School District Number 56, of Richardson County, to issue bonds for the purpose of erecting a school building, procuring a site therefor, and for setting apart a fund to pay the same," is void, it being in conflict with sect. 1, art. 8, of the Constitution of that State of 1866–67, which declares that "the legislature shall pass no special act conferring corporate powers."

ERROR to the Circuit Court of the United States for the District of Nebraska.

The facts are stated in the opinion of the court.

Mr. E. Estabrook, for the plaintiff in error.

Mr. Willard P. Hall, contra.

MR. JUSTICE MILLER delivered the opinion of the court.

The defendant in error recovered a judgment in the Circuit Court of the United States for the District of Nebraska against the plaintiff in error for the sum of $2,554.70. The judges of the Circuit Court certified a difference of opinion on three questions of law arising in the case, only one of which is necessary to be considered here, namely: "Whether the said act of the legislature of Nebraska, approved Feb. 2, 1875, recited in the bonds (the coupons of which are in suit), is in conflict with sect. 1 of art. 8 of the Constitution of the State, because the same is a special act conferring corporate powers; and also whether it is in conflict with sect. 19 of art. 2 of the Constitution of the State because it contains more than one subject."

Indeed, we only propose to consider the first branch of this double question. Sect. 1, art. 8, of the Constitution of Nebraska of 1866–67 reads thus: "The legislature shall pass no special act conferring corporate powers."

The act of Feb. 2, 1875, is entitled "An Act authorizing School District Number 56, of Richardson County, to issue bonds for the purpose of erecting a school building, procuring a site therefor, and for setting apart a fund to pay the same."

It authorized the school board to issue bonds to the amount of $20,000, payable in ten or twenty years, with ten per cent

per annum interest, for that purpose, and required a vote of a majority of the electors of the district before they could be issued. It forbade the sale of these bonds at less than eighty-five cents on the dollar. It also enacted that all the penalties and forfeitures thereafter imposed, for any breach of the ordinances of Falls City, and all money for licenses to sell or traffic in liquors, or any other commodity or license to transact other business, should be paid over to the board of trustees of the school district, as well as all fines imposed by the police judge of said city.

The bonds on which the judgment in this case was rendered were issued under this act, and it was so recited on their face. That this was a special act is not denied. Nor can it be controverted successfully that it confers corporate powers. The power to make a contract of this character, to collect the taxes necessary to pay the debt, to contract for and superintend and pay for the building, to receive the fund mentioned from the authorities of Falls City, are all in their nature corporate acts when performed by a body possessing corporate powers.

The statutes of Nebraska then in force declare that "every duly organized school district shall be a body corporate, and possess all the usual powers of a corporation for public purposes," . . . "and may sue and be sued, purchase, hold, and sell such personal and real estate as the law allows." The power conferred by the act of 1875 on School District No. 56 was conferred on a corporation, and was to be exercised by it as a corporation. It is, therefore, a corporate power, and was conferred, if at all, by a special act.

In response to this it is said that a school district is only a *quasi* corporation, and does not come within the constitutional provision. What is meant by the words "*quasi* corporation," as used in the authorities, is not always very clear. It is a phrase generally applied to a body which exercises certain functions of a corporate character, but which has not been created a corporation by any statute, general or special.

Such is not the case here, for the language of the Nebraska statute makes school districts corporations in the fullest sense of the word.

It is next argued that the constitutional provision was only

intended to apply to private corporations, as distinguished from those which are part of the body politic, such as counties and towns.

But we see no warrant for this distinction.

There is certainly nothing in the words of the provision to suggest any such distinction or limitation. Nor do we see any reason why the local corporate bodies discharging public functions should not be governed by general and uniform laws as well as those for private enterprises. In fact, the weight of the argument seems to be the other way, for it can very well be seen that the aggregation of individual capital and energy into an associated organization may require different powers for each enterprise so established, while the powers to be exercised by cities, towns, townships, and school districts in the same State may or should be uniform in character all over the State. If any such rule is defensible at all, of which it is not our province to judge, its application to the latter class of corporations seems the more appropriate of the two.

The Constitution of the State of Ohio has a provision similar to that of the State of Nebraska relied on in this case. In the case of *State* v. *Cincinnati* (20 Ohio St. 18), the Supreme Court of that State held that in the purview of the constitutional provision there was no distinction between private and municipal corporations. To the same effect is the decision of the same court in *Atkinson* v. *M. & C. Railroad Co.*, 15 id. 21. The Supreme Court of Nebraska, in *Clegg* v. *School District* (8 Neb. 178), held that the statute under which these bonds were issued was void, because forbidden by this clause of the State Constitution.

We are of opinion that this is a sound construction of the Constitution, and that, as to the first question certified to us, it must be answered that the act of Feb. 2, 1875, under which these bonds issued, is in conflict with the Constitution of the State, and is, therefore, void.

We are asked, however, to affirm the judgment because the bonds may be held valid under the powers conferred on school districts by the general statutes.

We are, however, of a different opinion. The general statute had other conditions for creating a debt than the special act

mentioned on the face of these bonds. This statute provided a fund which might of itself be sufficient to pay the debt without resort to taxation. The vote of the electors might not have been obtained under the general statute. And as the bonds recite that they were issued under this act, and that the vote was taken under it, we cannot see that power purposed to be exercised under other and very different circumstances can be invoked to give validity to an act which is void by the authority under which it professed to be acting.

These views render it unnecessary to answer the other questions certified to us. The judgment of the Circuit Court will be reversed, and the case remanded to that court for further proceedings not inconsistent with this opinion.

So ordered.

THE "CONNECTICUT."

THE "S. A. STEVENS."

THE "OTHELLO."

The court, upon the facts set forth in the opinion, holds that two vessels were in fault, in a collision whereby a boat towed by one of them was sunk, and affirms the decree of the court below apportioning the loss between them.

APPEALS from the Circuit Court of the United States for the Eastern District of New York.

Mr. Cornelius Van Santvoord for the "Connecticut."
Mr. Abraham Van Santvoord for the "S. A. Stevens."
Mr. Welcome R. Beebe for the "Othello."
Mr. Henry T. Wing, contra.

MR. CHIEF JUSTICE WAITE delivered the opinion of the court.

The question in these appeals is, whether, on the facts found, the decree below was right. The facts in brief are as follows: "About five o'clock in the morning of Wednesday, Aug. 18, 1875, the steamer "Connecticut," assisted by the tug "S. A.

Stevens," having in tow by a hawser twenty-five boats, arranged in five tiers of five boats each, passed around the battery from the Hudson River to the East River in New York harbor, on her way to the piers at or near Coenties slip in East River. The entire length of the "Connecticut" and her tow was about 1,050 feet. She passed between Diamond Reef and Governor's Island, taking the centre of the river and heading towards the Brooklyn shore. She kept this course until she reached a point about 1,500 feet above Diamond Reef, and about 100 feet above the drilling-machine on Coenties Reef. She then turned westwardly, across the river, and headed towards the Wall Street Ferry, on the New York shore. Her own engine was stopped when this change of course was made, but that of the "Stevens" was kept at work. The tide was at the time young flood in the East River, but the last of the ebb in the Hudson River.

About the same time the "Othello," an ocean steamer, left her dock at Pier 44 East River, a mile and three-eighths above Diamond Reef, bound for Hull, England. After getting headed down the river, her pilot discovered the "Connecticut" well on his port hand, and near Diamond Reef. The two vessels were then on courses which if kept would have carried them past each other port to port 300 feet apart. The "Othello" was on the usual and proper course for steamers of her class going to sea, and running at half speed, or about four knots an hour. She was in charge of a licensed Sandy Hook pilot, who stood on the forward bridge.

When the "Connecticut" changed her course and headed towards the New York shore, she gave no signal to the "Othello," but afterwards, when she was north of Coenties Reef, with her tow tailed its full length crosswise of the channel, and when the "Othello" was at least one-fourth of a mile away, she did give two blasts of her whistle, indicating that she wished the Othello to go to starboard. At this time, owing to the position of the tow, headed across the river as it was, the "Othello" could not pass in safety to starboard until the tow was got out of the way. Under these circumstances she kept on at half speed after the signal was given, until within an eighth of a mile of the tow. She then reversed her engine, but it was too late to stop her headway before she came in

collision with and sunk the boat "Sam. Morgan," one of the tow of the "Connecticut." Had she given attention to the signal when sounded, and stopped her engine, no collision would have occurred.

The tug "Stevens" was a mere helper, and subject to the orders of the "Connecticut." The owners of the "Sam. Morgan" sued all three of the vessels for the loss, and upon the facts as above stated the Circuit Court gave judgment dismissing the libel as to the "Stevens," but holding both the "Connecticut" and "Othello" responsible, and dividing the loss between them. The "Connecticut" was held in fault for not giving her signal at or before the time she changed her course, and the "Othello" for not heeding the signal when it was given, or taking the necessary precautions against a collision before. All parties have appealed; the libellants because the "Stevens" was acquitted, and the "Connecticut" and the "Othello" each because they were respectively charged with any portion of the loss.

So far as the "Stevens" is concerned, she was clearly not to blame. She was the mere servant of the "Connecticut," and could exercise no will of her own. She was bound to obey orders from the "Connecticut," and no part of the responsibility of the navigation, so far as the approaching vessel was concerned, was on her. It was not her duty to signal the movements of the "Connecticut," under whose exclusive control she was. The "Connecticut" is alone responsible for the consequences of her own faults.

Without doubt the "Connecticut" had the right to go to her landing place, and for that purpose we see no reason why she might not have taken the courses she did. But she was navigating in a crowded harbor with a cumbersome tow, and, do the best she could, her presence would necessarily be an embarrassment to other vessels passing through the channel in which she was. It was her duty as much to notice the movement of the "Othello" above, as it was that of the "Othello" to look out for her below. Safety under such circumstances requires all navigators to be watchful and prompt in taking every precaution against mistakes or oversights. From the way the "Connecticut" was heading when the "Othello"

ought first to have seen her and for some time afterwards, the "Othello" had the right to assume the vessels would pass in safety port to port. It was proper, therefore, for her to make her calculations accordingly and keep on at the speed she was going. This the "Connecticut" should also have understood; and since to put herself and her long tow across the channel would necessarily involve a change of action by the "Othello," it was certainly her duty to give prompt and timely notice of her intention to execute such a manœuvre. Had she done this, she might have called attention to her movements and placed the obligation of keeping out of the way on the "Othello." She did not, and a collision afterwards occurred which could have been avoided. Under such circumstances the law will charge her with contributing to the loss, unless she clearly shows the contrary. It is quite probable that if the "Othello" had been on the watch and had noticed the change of course when it was begun, the collision might not have happened; but the very object of signals is to call attention to what is wanted and make sure there is no oversight. In navigating crowded harbors, while the attention of lookouts is called to one object of importance, another may pass unobserved. To avoid the consequences of accidents of this kind, a system of signals has been adopted and lawfully promulgated, which navigators are required to use when the circumstances are such as to make them necessary. To omit them is a fault, the consequences of which may fall on the delinquent party. Here, when the "Othello" first saw the "Connecticut," she was apparently expected to pass to port. The circumstances of the "Connecticut" were such as to make it necessary for her to cross the bow of the "Othello" while that vessel was coming down the river. She could not get by with her tow before the "Othello" must come to where she or the tow was, unless something was done to prevent it. Clearly it was wrong to attempt such a movement without giving notice.

That the "Othello" was in fault is equally clear. There was time after the signal was given and before the collision happened for her to have avoided it if she had acted promptly. If the change in the course of the "Connecticut" had escaped her attention before, it was all the more important that she

should be active then. Her pilot ought to have known that she could not pass in safety to starboard until the "Connecticut" had time to get the tow out of her way. She should therefore have stopped or shaped her course to get ahead of the "Connecticut," if that could be done with safety. She did neither until it was too late. Under these circumstances it was not wrong to charge her with one-half the loss occasioned by the mutual fault of herself and the "Connecticut."

Under all the circumstances we think it was right to divide the loss equally between the two defaulting vessels. The decree of the Circuit Court will be consequently affirmed, the costs of each appeal to be paid by the respective appellants; and it is

So ordered.

PENNIMAN'S CASE.

A State statute abolishing imprisonment for debt does not, within the meaning of the Constitution, impair the obligation of contracts which were entered into before its enactment.

ERROR to the Supreme Court of the State of Rhode Island.

The facts are stated in the opinion of the court.

Mr. Benjamin F. Thurston in support of the judgment below.

Mr. Harvey N. Shepard, contra.

MR. JUSTICE WOODS delivered the opinion of the court.

The General Statutes of Rhode Island, chap. 142, contain the following provisions: —

"SECT. 11. Every manufacturing corporation included within the provisions of this chapter, shall file in the town clerk's office of the town where the manufactory is established, annually on or before the 15th day of February, a certificate, signed by a majority of the directors, truly stating the amount of its capital stock actually paid in; the value, as last assessed for a town tax, of its real estate; the balance of its personal assets, and the amount of its debts.

"SECT. 12. If any of said companies shall fail to do so, all the stockholders of said company shall be jointly and severally liable for all the debts of the company then existing, and for all that shall

be contracted before such notice shall be given, unless such company shall have been insolvent and assigned its property in trust for the benefit of its creditors, in which case the obligation to give notice by the filing of such certificate shall cease."

"SECT. 20. Whenever the stockholders of any manufacturing company shall be liable, by the provisions of this chapter, to pay the debts of such company, or any part thereof, their persons and property may be taken therefor on any writ of attachment or execution, issued against the company for such debt, in the same manner as on writs and executions issued against them for their individual debts.

"SECT. 21. The person to whom such officers or stockholders may render themselves liable as aforesaid may, instead of the proceedings aforementioned, have his remedy against said officers or stockholders by bill in equity in the Supreme Court."

While these provisions of the statute law were in force, Tweedle recovered judgment against the American Steam and Gas-pipe Company, a manufacturing corporation created by the General Assembly of Rhode Island, and subject to the provisions above recited. Penniman was a stockholder in that corporation. The certificate required by sect. 11 had not been filed. He was, consequently, individually liable in person and property for the satisfaction of the judgment. Therefore, the sheriff, holding the execution issued on the judgment, and finding no goods and chattels of the corporation or of Penniman, arrested him and committed him to jail.

While he was in jail, under the commitment, the General Assembly of Rhode Island, on March 27, 1877, passed an act "defining and limiting the mode of enforcing the liability of stockholders for the debts of corporations." It was as follows: —

"SECT. 1. No person shall hereafter be imprisoned, or be continued in prison, nor shall the property of any such person be attached, upon an execution issued upon a judgment obtained against a corporation of which such person is or was a stockholder.

"SECT. 2. All proceedings to enforce the liability of a stockholder for the debts of a corporation shall be either by suit in equity, conducted according to the practice and course of equity, or by an action of debt upon the judgment obtained against such

corporation; and in any such suit or action such stockholder may contest the validity of the claim upon which the judgment against such corporation was obtained upon any ground upon which such corporation could have contested the same in the action in which such judgment was recovered.

"SECT. 3. All acts and parts of acts inconsistent herewith are hereby repealed.

"SECT. 4. This act shall take effect from and after the date of the passage thereof."

Penniman did not take or offer to take the poor-debtor's oath, on the taking of which he would have been entitled to discharge from imprisonment, but, while he was still in jail under the commitment, applied to the Supreme Court of the State for his release by virtue of the provisions of the act just recited.

His discharge was opposed by Tweedle, the committing creditor, on the ground that the first section of the act, by virtue and force of which he claimed to be discharged from imprisonment, was repugnant to and in violation of sect. 10, art. 1, of the Constitution of the United States, and was, therefore, null and void, because it impaired the obligation of the judgment upon which the commitment had been made, and of the contract on which the judgment was founded.

It was adjudged by the Supreme Court that the section was constitutional and valid, and that by virtue thereof Penniman was entitled to be discharged from further custody under the commitment. He was discharged accordingly.

This judgment of the Supreme Court is brought here on error for review.

It is only necessary to consider that part of sect. 1 of the act above recited which relieves a party from imprisonment upon the execution. Penniman invokes that provision and no other. He was merely relieved from imprisonment, and it is that and that only of which Tweedle complains. Statutes that are constitutional in part only will be upheld, so far as they are not in conflict with the Constitution, provided the allowed and the prohibited parts are severable. *Packet Company* v. *Keokuk*, 95 U. S. 80. So that if so much of the section under consideration as relieves a debtor from imprisonment for debt is

constitutional and can be severed from the other parts of the enactment, the judgment of the Supreme Court of Rhode Island should be affirmed.

That part of the section which relates to the imprisonment of the debtor, and that which relates to the seizure of his property, are entirely distinct and independent, and either one can stand and be operative, though the other should be declared void. We may, then, in deciding this case, consider sect. 1 as if it read: "No person shall hereafter be imprisoned, or be continued in prison, . . . upon an execution issued upon a judgment obtained against a corporation of which such person is or was a stockholder."

The only question, therefore, which we are called on to decide is whether this provision, enacted after the recovery of the judgment against the corporation, by virtue of which the defendant in error was imprisoned, is a law which impairs the obligation of contracts.

In other words, Can a State legislature pass a law abolishing imprisonment for debt on contracts made or judgments rendered when imprisonment of the debtor was one of the remedies to which his creditor was by law entitled to resort?

This court has repeatedly and pointedly answered this question in the affirmative, holding such an enactment not to impair the obligation of the contract.

In *Sturges* v. *Crowninshield* (4 Wheat. 122) this court, speaking by Mr. Chief Justice Marshall, said: "The distinction between the obligation of a contract and the remedy given by the legislature to enforce that obligation, has been taken at the bar and exists in the nature of things. Without impairing the obligation of the contract the remedy may certainly be modified, as the wisdom of the nation shall direct. Confinement of the debtor may be a punishment for not performing his contract, or may be allowed as a means of inducing him to perform it. But the State may refuse to inflict this punishment, or may withhold this means and leave the contract in full force. Imprisonment is no part of the contract, and simply to release the prisoner does not impair its obligation."

The precise question raised in this case came before this court in *Mason* v. *Haile*, 12 id. 370. The case was an action

of debt, brought in the Circuit Court of Rhode Island, upon two several bonds given by Haile to the plaintiff Mason and one Bates, whom the plaintiff survived; one of which was executed on the 14th and the other on the 29th of March, 1814.

The condition of both bonds was the same, and was as follows: —

"The condition of the above obligation is such that if the above-bounden Nathan Haile, now a prisoner in this State's jail in Providence, within the county of Providence, at the suit of Mason and Bates, do, and shall from henceforth continue to be, a true prisoner in the custody, guard, and safekeeping of Andrew Waterman, keeper of said prison, and in the custody, guard, and safekeeping of his deputy, officers, and servants, or some one of them, within the limits of said prison, until he shall be lawfully discharged, without committing any manner of escape or escapes during the time of restraint, then this obligation to be void, or else to remain in full force and virtue."

To the declaration upon these bonds the defendant pleaded, in substance, that in June, 1814, after giving the bonds, he presented a petition to the legislature of Rhode Island, praying for relief and the benefit of an act passed in June, 1756, entitled "An Act for the relief of insolvent debtors." That in February, 1816, the legislature, upon due hearing, granted the prayer of his petition and passed the following resolution: —

"On petition of Nathan Haile, of Foster, praying for the relief therein stated, that the benefit of an act passed in June, 1756, for the relief of insolvent debtors, may be extended to him. *Voted*, that the prayer of the petition be, and the same is, hereby granted."

That the defendant afterwards, in pursuance of said resolution and of the laws of the State, received, in due form, from the proper court, a judgment that "he should be, and was thereby, fully discharged from all the debts, duties, contracts, and demands, . . . and from all imprisonment, arrest, and restraint of his person therefor."

To this plea a demurrer was filed, and the judges of the Circuit Court being divided in opinion as to the sufficiency of

the plea, the question was certified to this court for final decision.

The case was argued by Mr. Webster for the plaintiff. He urged that the act of February, 1816, liberating the person of defendant from imprisonment and reviving in his favor an obsolete insolvent act of the colonial legislature passed in 1756, and no longer in force, was in the strictest sense a law impairing the obligation of contracts; that it interfered with an actually vested right of the creditor acquired under existing laws and entitling him to a particular remedy against the person of his debtor; that upon the narrowest construction which had ever been given to the prohibition in the Constitution of the United States it impaired the obligation of the bonds; that the obligation of these bonds was entirely destroyed by the act, which was not a general law, but a private act professedly intended for the relief of the party in the particular case.

But this court held the plea good, and the resolution of the legislature of Rhode Island by which the defendant was discharged from imprisonment a valid and constitutional enactment.

The court said: "Can it be doubted but the legislatures of the States, so far as relates to their own process, have a right to abolish imprisonment for debt altogether, and that such law might extend to present as well as future imprisonment? We are not aware that such a power in the States has ever been questioned. And if such a general law would be valid under the Constitution of the United States, where is the prohibition to be found that denies to the State of Rhode Island the right of applying the same remedy to individual cases. . . . Such laws merely act on the remedy, and that in part only. They do not take away the entire remedy, but only so far as imprisonment forms a part of such remedy. The doctrine of this court in the case of *Sturges* v. *Crowninshield* (4 Wheat. 200) applies with full force to the present case."

Mr. Justice Washington dissented from the opinion in the case, but concurred in so much as related to the discharge of the defendant from imprisonment. He remarked: "It was stated in *Sturges* v. *Crowninshield* that imprisonment of the

debtor forms no part of the contract, and, consequently, that a law which discharges his person from imprisonment does not impair its obligation. This I admit, and the principle was strictly applicable to a contract for money. . . . I admit the rights of a State to put an end to imprisonment for debt altogether."

So in *Beers* v. *Haughton* (9 Pet. 329), this court said. "There is no doubt that the legislature of Ohio possessed full constitutional authority to pass laws whereby insolvent debtors should be released or protected from arrest or imprisonment of their persons on any action for any debt or demand due by them. The right to imprison constitutes no part of the contract, and the discharge of the person of the party from imprisonment does not impair the obligation of the contract, but leaves it in full force against his property and effects." p. 359. See also *Von Hoffman* v. *City of Quincy*, 4 Wall. 535, and *Tennessee* v. *Sneed*, 96 U. S. 69.

The general doctrine of this court on this subject may be thus stated: In modes of proceeding and forms to enforce the contract the legislature has the control, and may enlarge, limit, or alter them, provided it does not deny a remedy or so embarrass it with conditions or restrictions as seriously to impair the value of the right. *Bronson* v. *Kinzie*, 1 How. 311; *Von Hoffman* v. *City of Quincy*, *supra*; *Tennessee* v. *Sneed*, *supra*.

The result of the decisions of this court above quoted is that the abolition of imprisonment for debt is not of itself such a change in the remedy as impairs the obligation of the contract.

Judgment affirmed.

STEAMSHIP COMPANY v. UNITED STATES.

UNITED STATES v. STEAMSHIP COMPANY.

The contracts entered into by the United States and the Pacific Mail Steamship Company, for carrying the mails by the latter between San Francisco and certain Asiatic ports, considered. *Held*, 1. That the company has no claim to compensation other than sea postage for carrying them in vessels which had not been accepted by the Postmaster-General. 2. That it is entitled to recover, under the contract of Aug. 23, 1873, for services performed, pursuant to its terms, in vessels which he had, under the contract of Oct. 16, 1866, accepted. 3. That the annulment of the contract by the act of March 3, 1875, c. 128, does not affect the company's claim for such services on a voyage commenced before that date.

APPEALS from the Court of Claims.

The facts are stated in the opinion of the court.

The Solicitor-General and *Mr. Edwin B. Smith*, Assistant Attorney-General, for the United States.

Mr. John F. Farnsworth, *Mr. William E. Chandler*, *Mr. Philip Phillips*, *Mr. Roscoe Conkling*, *contra.*

MR. JUSTICE MILLER delivered the opinion of the court.

These are cross-appeals from a judgment of the Court of Claims. The Pacific Mail Steamship Company asserted in that court a claim for $531,666.66, and recovered a judgment for $41,666.66. The United States desire to reverse this latter judgment. The company seeks to recover here the full sum claimed below.

The suit grows out of a contract for carrying the mail from San Francisco to certain Asiatic ports. The facts, as found by the Court of Claims, and so far as is necessary to our decision, will be stated as we proceed.

The steamship company entered, on the 16th of October, 1866, into a contract with the United States to carry a monthly mail from San Francisco to China and Japan, *via* the Sandwich Islands, for the sum of $500,000 per annum, for a period of ten years.

These mails were to be carried in first-class American sea-

going side-wheel vessels of from 3,500 to 4,000 tons burden, to be inspected and accepted by the Postmaster-General. The company, in due time, entered upon the discharge of this duty. The steamships "Colorado," "Great Republic," "China," "Japan," "America," and "Alaska" were duly inspected and were accepted by the government for that service. They had been in actual use in performing the contract for several years, when Congress by the act of June 1, 1872, c. 256, making appropriations for the service of the Post-Office Department for the next fiscal year, enacted as follows: —

"SECT. 3. . . . For steamship service between San Francisco, Japan, and China, five hundred thousand dollars; and the Postmaster-General is hereby authorized to contract with the lowest bidder, within three months after the passage of this act, after sixty days' public notice, for a term of ten years, from and after the first day of October, eighteen hundred and seventy-three, for the conveyance of an additional monthly mail, on the said route, at a compensation not to exceed the rate per voyage now paid, under the existing contracts, and upon the same conditions and limitations as prescribed by existing acts of Congress in reference thereto, and the respective contracts made in pursuance thereof; and the contractors, under the provisions of this section, shall be required to carry the United States mails during the existence of their contracts without additional charge, on all the steamers they may run upon said line, or any part of it, or any branch or extension thereof: *Provided*, that all steamships hereafter accepted for said service shall be of not less than four thousand tons register each, and shall be built of iron, and, with their engines and machinery, shall be wholly of American construction; and shall be so constructed as to be readily adapted to the armed naval service of the United States, in case of war, and, before acceptance, the officers by whom they are inspected shall report to the Secretary of the Navy and the Postmaster-General whether this condition has been complied with. . . . And the government of the United States shall have the right, in the case of war, to take for the use of the United States any of the steamers of said line, and, in such case, pay a reasonable compensation therefor: *Provided*, the price paid shall in no case exceed the original cost of the vessel so taken; and the provision shall extend to and be applicable to the steamers of the Brazilian line hereinafter provided for."

"SECT. 6. That if the contract for the increase of the mail service between San Francisco and China and Japan to a semi-monthly service shall be made with the Pacific Mail Steamship Company, or shall be performed in said company's ships, or the ships of its successors in interest, the moneys payable under such contract shall be paid while the said company, or its successors in interest, shall maintain and run the line of steamships for the transportation of freight and passengers, at present run between New York and San Francisco, *via* the Isthmus of Panama, by the said Pacific Mail Steamship Company, and no longer: *Provided*, that said requirements shall, in all respects, apply to any party contracting for the mail service between San Francisco and China and Japan, as well as to the Pacific Mail Steamship Company."

After advertising for bids for this service, and receiving one from the Pacific Mail Company, the Postmaster-General and the company signed, Aug. 23, 1873, a contract, which is too long to be copied here in full. On the part of the company, after reciting the times of departure and places of delivery of the mails which they bound themselves to carry for the period of ten years, commencing on the first day of October, 1873, there occurs this sentence, on the construction of which the present controversy hinges: "And the said contractors do further covenant and agree with the United States, and do bind themselves, that the steamships hereafter offered for the service shall be of not less than four thousand tons register each, and shall be built of iron, and, with their engines and machinery, shall be wholly of American construction, of the best materials and after approved models, and shall be so constructed as to be readily adapted to the armed naval service of the United States in case of war; and before acceptance, the officers by whom they are inspected shall report to the Secretary of the Navy and the Postmaster-General whether this condition has been complied with; and, further, that the said steamships, after acceptance by the Postmaster-General, and during the period they may be employed in conveying the mails, shall be kept up by alterations, repairs, and additions, as the exigency may require, fully equal to the best state of steamship improvement attained; and if not so kept up and maintained, they may be rejected by the Postmaster-General of the United States, as not meeting

the requirements of the act of Congress authorizing the additional monthly service, and other satisfactory steamships required in their place." The question is whether the company was bound by this contract to carry this additional semi-monthly mail in vessels of the class here described and in no others, or whether, while exercising due diligence, to have as many vessels of that kind as were necessary, in addition to those which had been accepted under the first contract, these last could be used in performing the contract. Counsel for the government maintain that, inasmuch as under this contract but one trip was made by a vessel of the class here described, the service rendered by other vessels which had been accepted by the Postmaster-General, before this contract was made, was not a service in compliance with the contract for which they are entitled to receive the $41,666.66 per trip, while the contention of the company is, that it was at liberty to use ships already accepted for this service, being the same service which they were then performing under the former contract, except that it had now become a semi-monthly instead of a monthly mail, and that by the use of the word "hereafter," in the new contract, reference was had to such new vessels as it might become necessary to introduce into that service.

It will be observed that "hereafter" occurs in the act of 1872, under which the contract was made, and in the same connection. It has no sense either in the statute or the contract, unless there is an implied reference to vessels already accepted. If we suppose that while Congress required the contract to be let, after public notice, to the lowest bidder, but at no higher rate than $500,000 per annum, it also had in mind the great probability that the company which was performing the contract for a monthly mail at that price would obtain the contract for the additional service, we can readily understand the use of the word "hereafter" both in the statute and in the contract. It being understood that six vessels of that company had already been inspected and accepted by the Postmaster-General for that service, and were then engaged in it, the only reasonable use of the agreement that "steamships hereafter offered" should be of the new class, is that those already accepted might be used under this contract

for the same service, but that such other vessels as the service should require must be of the higher class described in the statute.

There are many reasons to believe that while Congress observed its uniform policy of letting such contracts to the lowest bidder, thus inviting competition, it felt reasonably sure that in the present case the Pacific Mail Company would get it, if let at all, as the maximum of $500,000 per annum left an alternative that no contract might be made.

One of these considerations is that the company had for some time been making semi-monthly trips on the same route in pursuit of their general business as carriers, and had carried the mail every trip, receiving for the trip, for which they had no contract, what is called the sea postages, — a phrase not explained in the record, but understood to mean the postage received by the United States for the mail matter actually carried. If the company was doing this already for such a small sum, generally less than $1,000 per round trip, it was to be supposed they could underbid any one else. Besides, it was well known that no one else was prepared to perform the service, or could afford to put in a competing line for it. That Congress contemplated the taking of the contract by this company as extremely probable is shown by the provisions of the sixth section of the act, that if the contract was made with that company *or performed in its ships* the money should only be paid so long as that company should continue its line from New York to San Francisco by way of Panama. We have here not only the probability that this contract would be made by the company which already was running a line of steamers from New York to San Francisco and was doing the work from San Francisco to Asia, which was now to be doubled, but we have the one made to depend on the performance of the other, and the distinct intimation that the new service might be performed in the ships of that company. Now, though this does not necessarily mean ships then in existence, when taken in connection with the use of the word "hereafter," as we have suggested, it adds to the force of the implication that ships of that company which had already been accepted might still be used for a service not new, but increased in the

frequency of voyages, if the contract was awarded to the company then performing the service.

The construction of this contract was referred by the Postmaster-General to the Attorney-General in the summer of 1874, the question being whether the contract had been forfeited or was liable to be declared so by reason of the fact that while the new service was to commence Oct. 1, 1873, no vessel of the higher class described in the contract had been offered.

The Solicitor-General in a very careful opinion held that while the literal terms of the contract might be held to mean that the additional service should be wholly performed in the higher class of vessels, the act of Congress under which the contract was made clearly did not require this.

He says: "It seems to me plain that the act of 1872 did not require such additional mail service in steamships of the new class, unless such became necessary." And while he is of opinion that the language of the contract does require this, he considers it to be an immaterial part of the agreement, and concludes that the failure to provide the new vessels when the work was as well done by those already accepted did not authorize a forfeiture of the contract.

The Attorney-General also gave an opinion, in which, while he declines to adopt all of the Solicitor-General's views, he says: "I am of opinion that it was not an essential part of the contract that the new iron steamships should be furnished by the 1st of October, 1873, if at that time it satisfactorily appeared that they would be furnished within a reasonable time thereafter." 14 Op. Att.-Gen. 674. It does not appear to us that there is such a discrepancy between the language of the statute and of the contract as is suggested by the Solicitor-General, and if there were, the following words found in the contract would make the statute govern the case: "This contract shall in all its parts be subject to, and in all respects governed by, the requirements and provisions of the third and sixth sections of the act of Congress approved June 1, 1872." These are the sections we have copied, and which the Solicitor-General construes as we do, not to require the steamships of the new class until other vessels became necessary besides those already accepted

That such was the understanding of the parties to this contract receives strong confirmation from language found in the bid or offer of the company, which was accepted without qualification by the Postmaster-General. It is this: "We are now building two iron propellers of about 4,500 tons register, capable of steaming twelve knots, and propose, as soon as practicable, with the limited facilities now available in America, to build two more steamers of like construction, but larger and of higher speed, all of which we shall offer for the service in question. Until they can be put into commission, and afterwards, whenever circumstances may require us to relieve them temporarily, we propose to perform the service with one of the steamships heretofore accepted for the China mail service, viz., 'America,' 'Japan,' 'China,' 'Great Republic,' 'Alaska,' and 'Colorado,' or in case of need with the 'Constitution,' heretofore accepted as a spare steamer for said service."

It does not appear that this was objected to, and the finding of the Court of Claims is that the proposal was accepted as made; and if there be any difficulty in construing the language of the contract, it is fair to presume that it was not intended to conflict directly with such an important part of the proposal, after it had been accepted without objection.

Two acts of the claimant are much relied on to sustain the construction of the contract now asserted by the government's counsel, and it must be confessed that they tend to show that, about the time the performance of the contract should have commenced, some of the officers of the steamship company entertained the view that all the additional service was to be performed in the new class of vessels.

The first of these is a letter written in behalf of the steamship company by S. K. Holman, vice-president, in answer to one from the Post-Office Department. This latter letter is dated Oct. 24, 1873, and is addressed to George H. Bradbury, president of the company, and requests him to put in writing, for the use of the department, the explanation which, in a recent personal interview with the Postmaster-General, he had given for failing to commence the additional service on the 1st of October, as required by law and contract.

To this Mr. Holman says: —

"SIR, — In the matter of the contract between the Postmaster-General and the Pacific Mail Steamship Company for an additional semi-monthly mail service between San Francisco, Japan, and China, said service to be performed with American-built iron steamships of not less than 4,000 tons register, and to have been commenced on Oct. 1, 1873, we beg to submit the following, which will explain the reason of our failure to have placed the ships on the line as per contract."

He then proceeds at length to explain the difficulties encountered in the construction of the two ships "City of Pekin" and "City of Tokio," which had prevented the company from placing in time any vessel of that class in the line. It must be conceded that this language and the whole tenor of the letter impliedly admit that it was the duty of the company under the contract to furnish the new class of vessels at once.

This is further confirmed by the fact that while the mails were carried twice a month from October 1 to December 31, on vessels already accepted under the old contract, the sea postage for this service, amounting to $1,510.81, was, on the 11th of February, 1874, paid to the company at its request.

But immediately thereafter the company refused to receive any more of the sea postage, though warrants therefor to the amount of $5,105.41 were tendered, and it continued to perform the additional service, and to demand the contract price for it, until Congress, by the act of March 3, 1875, c. 128, in the exercise of the power reserved in the act of June 1, 1872, repealed that act and annulled the contract.

But the question to be decided is, not how one or more of the officers of the steamship company construed the contract several months after it had been made, but what was the intention of the parties thereto, and what did Congress mean when it enacted this particular proviso. We have already said that by a just construction of its terms the contract conforms to the statute, and that the latter did not require the additional service to be performed exclusively in the new class of vessels. We have shown that, when bidding for the contract, the company guarded this point by expressly stating they should use the old vessels.

Is all this to be overcome by the language of a single officer

of the company, and that not the highest, and whose authority in the company is not shown? There is no evidence that the president of the company, or its board of directors, held these views.

So the receipt of the sea postage for three months may have been by the mistaken action of some inferior officer of the company. Long before the new contract was to begin the company had been performing this additional service and receiving the sea postage as compensation for it, and it may have been that some officer, unaware of the new contract, had continued to ask for and receive these postages after it went into effect. We do not think these acts are sufficient to overcome the construction of the contract arising from the statute and the language of the instrument, and they certainly do not estop the company from asserting the rights which the true construction of it gives them.

The Court of Claims finds that the additional mail service was performed by twelve round trips, beginning Oct. 17, 1873, and terminating Jan. 16, 1875, and that of these voyages six were made by ships which had been accepted under the first contract, and six by vessels which had never been accepted by the Postmaster-General. We are of opinion that claimant can only recover on this contract for the service rendered by vessels which had been accepted, and that it cannot recover on the contract for mails carried in vessels which had not been accepted under the contract. As to these, the sea postages offered by the Postmaster-General must be, as it was before the making of the contract, the only compensation. There may be deductions for non-performance of duty, or other matters provided in the contract, in regard to which no finding is made by the Court of Claims, but which will be open to inquiry on the return of the case to that court.

As regards the sum allowed claimant for the voyage of the "City of Pekin," we think the Court of Claims was clearly right. That vessel had been examined and accepted by the Postmaster-General, as one of the new and higher class of vessels, and the mails had been delivered to her at San Francisco, on the 20th of February, 1875, and she had started on the round trip ten or twelve days before Congress passed the stat-

ute annulling the contract, and she carried the mails under that contract on the voyage out and the return voyage. We are of opinion that the repeal of the statute and the annulment of the contract were not designed to operate on that voyage, and that in that respect the judgment of the Court of Claims was right.

Its judgment in regard to the other trips will be reversed, and the case remanded to it with instructions to render a judgment in conformity to this opinion; and it is

So ordered.

140-368

THE "ADRIATIC."

The court promulgates a rule declaring what matters the record shall contain in cases of admiralty and maritime jurisdiction, where the reviewing power of the court is limited to questions of law.

APPEAL from the Circuit Court of the United States for the Southern District of New York.

Motion to strike from the transcript the depositions and oral testimony taken in the progress of the cause in the several courts below.

Mr. E. P. Wheeler in support of the motion.

Mr. William Allen Butler, contra.

MR. CHIEF JUSTICE WAITE delivered the opinion of the court.

Sect. 698 of the Revised Statutes provides that, upon the appeal of any cause of admiralty and maritime jurisdiction, a transcript of the record shall be transmitted to this court "and copies of the proofs and of such entries and papers on file as may be necessary on the hearing of the appeal." While sect. 1 of the act of Feb. 16, 1875, c. 77 (18 Stat., pt. 3, 315), limits the review by this court of the judgments and decrees on the instance side of courts of admiralty and maritime jurisdiction to the questions of law arising on the record, and to such rulings of the court below excepted to at the time, as may be presented by a bill of exceptions, and requires the court

below to find the facts, no change has been made in the law prescribing what should be included in the transcript sent here on an appeal. For that reason we will not order the testimony which has been sent up in this case to be stricken out. As under our repeated decisions, the facts as found are conclusive on us, it is clear the testimony may not be "necessary on the hearing of the appeal." *The Abbotsford*, 98 U. S. 440; *The Benefactor*, 102 id. 214. For this reason it may with propriety by consent of counsel be omitted from the printed record. We will not, however, make any order in that behalf; but if it shall be unnecessarily printed against the wishes of either of the parties, we will, on the final determination of the case, give such directions in respect to costs as may seem proper.

The section of the Revised Statutes referred to, however, requires only copies of such of the proofs to be sent up "as may be necessary on the hearing of the appeal." This gives us power to prescribe by rule what shall be done in cases where the act of 1875 applies. For the guidance hereafter of parties appealing, and the officers of the courts below in such a case, we, therefore, now promulgate the following as an additional paragraph, numbered 6, to rule 8:—

"6. The record in causes of admiralty and maritime jurisdiction, where under the requirements of law the facts have been found in the court below, and our power to review is limited to the determination of questions of law arising on the record, shall be confined to the pleadings, the findings of fact and conclusions of law thereon, the bills of exceptions, the final judgment or decree, and such interlocutory orders and decrees as may be necessary to a proper review of the case."

397-314

103 732
L.ed 469
491 906

NATIONAL BANK v. KIMBALL.

1. As a general rule, the owner of taxable property, who seeks to enjoin the collection of a tax thereon, which he alleges to be in excess of what is lawful, must first pay or tender so much thereof as is justly due.
2. A bill to restrain the collection of a State tax upon the shares of a national bank is bad on demurrer, where it does not appear that there is any statutory discrimination against them, or that they, under any rule established by the assessing officers, are rated higher in proportion to their actual value than other moneyed capital.
3. The bill in this case avers that the same percentage is assessed on such shares as on other property, and that they are rated at about one-half their actual value. No case for relief is made by averring that the assessments are unequal and partial, and some other property is rated for taxable purposes at less than one-half of its cash value.

APPEAL from the Circuit Court of the United States for the Northern District of Illinois.

The facts are stated in the opinion of the court.

Mr. D. K. Tenney and *Mr. J. M. Flower* for the appellant.
Mr. Consider H. Willett, contra.

MR. JUSTICE MILLER delivered the opinion of the court.

This is a bill in chancery, filed by The German National Bank of Chicago, to enjoin Kimball, collector of the town of South Chicago, from enforcing payment of the taxes assessed against the holders of shares of its stock.

The general grounds on which this relief is sought are twofold, namely: that the assessment violates the provision of the act of Congress concerning national banks, which forbids the States from taxing these shares at any higher rate than other moneyed capital within the State; and that it also violates the provision of the Constitution of Illinois concerning uniformity of taxation. From the decree dismissing the bill on demurrer, this appeal has been taken.

The bill is made up of averments which are intended to show that the valuation of the property of other persons in the same town, made by the same assessor, is less in proportion to its actual cash value than that of the complainant's shares; that the same is true in other parts of the State; that some corporations are favored in this valuation, and that certain classes of

property are favored in a general way. But there is no distinct averment that the shares of this bank are valued higher for the purpose of taxation than other moneyed capital generally, though this is alleged in regard to particular instances. The allegations are pretty full that the assessments are partial, unequal, and unjust, and do not result in the uniformity of taxation which the Constitution of Illinois requires.

But we think there are two fatal objections to the bill.

The first of these is that there is no offer to pay any sum as the tax which the shares of the bank ought to pay.

We have announced more than once that it is the established rule of this court that no one can be permitted to go into a court of equity to enjoin the collection of a tax until he has shown himself entitled to the aid of the court by paying so much of the tax assessed against him as it can be plainly seen he ought to pay; that he shall not be permitted, because his tax is in excess of what is just and lawful, to screen himself from paying any tax at all until the precise amount which he ought to pay is ascertained by a court of equity; and that the owner of property liable to taxation is bound to contribute his lawful share to the current expenses of government, and cannot throw that share on others while he engages in an expensive and protracted litigation to ascertain that the amount which he is assessed is or is not a few dollars more than it ought to be. But that before he asks this exact and scrupulous justice he must first do equity by paying so much as it is clear he ought to pay, and contest and delay only the remainder. *State Railroad Tax Cases*, 92 U. S. 575.

The bill attempts to evade this rule by alleging that the tax is wholly void, and, therefore, none of it ought to be paid, and that by reason of the absence of all uniformity of values, it is impossible for any person to compute or ascertain what the stockholders of the complainant bank ought to pay on the shares of the bank. In the case just cited this court said, in answer to the first objection: "It is clear that the road-bed within each county is liable to be taxed at the same rate that other property is taxed. Why have not complainants paid this tax? It is said they resist the rule by which the value of their road-bed in each county is ascertained. But surely they

should pay tax by some rule. . . . Should they pay nothing, and escape wholly, because they have been assessed too high? These questions answer themselves. Before complainants seek the aid of the court to be relieved of the excessive tax, they should pay what is due. Before they ask equitable relief, they should do that justice which is necessary to enable the court to hear them." Id. 616.

In the same case the court said: "It has been repeatedly decided that neither the mere illegality of the tax complained of, nor its injustice, nor irregularity, of themselves give the right to an injunction in a court of equity." The authorities there cited support the proposition. The whole extent of the injustice complained of in this bill is the inequality of the actual assessment, and for this it is argued the whole tax of the township is void; and as the bill seeks to bring into view the inequality as regards other counties in the State, it follows that, if it be sustained, the entire tax of the State for that year must be declared void, in order that the complainant may be relieved of a few thousand dollars and entirely escape taxation for that year.

In the same case this court said: "Perfect equality and perfect uniformity of taxation, as regards individuals and corporations, or the different classes of property subject to taxation, is a dream unrealized. It may be admitted that the system which most nearly attains this is the best. But the most complete system which can be devised must, when we consider the immense variety of subjects which it necessarily embraces, be imperfect. And when we come to its application to the property of all the citizens, and of those who are not citizens in all the localities of a large State like Illinois, the application being made by men whose judgments and opinions must vary as they are affected by all the circumstances brought to bear upon each individual, the result must inevitably partake largely of the imperfection of human nature, and of the evidence on which human judgment is founded." p. 612.

These principles are sufficient to decide the case, and were declared by this court in a case arising in the same State and under the same Constitution and revenue laws with the one now before us.

An apparent exception to the universality of the rule is admitted in *People* v. *Weaver*, 100 U. S. 539, *Pelton* v. *National Bank*, 101 id. 143, and *Cummings* v. *National Bank*, id. 153. It is held in these cases that when the inequality of valuation is the result of a statute of the State designed to discriminate injuriously against any class of persons or any species of property, a court of equity will give appropriate relief; and also where, though the law itself is unobjectionable, the officers who are appointed to make assessments combine together and establish a rule or principle of valuation, the necessary result of which is to tax one species of property higher than others, and higher than the average rate, the court will also give relief. But the bill before us alleges no such agreement or common action of assessors, and no general rule or discriminating rate adopted by a single assessor, but relies on the numerous instances of partial and unequal valuations which establish no rule on the subject.

So far as anything of the kind is to be inferred, it is that shares of national bank stock, including the complainant's, were assessed at only thirty-four per cent of their value, which, by the board of equalization, was raised to fifty-three per cent; and other property more, and still other less.

The case, then, made by the complainant is this: that the shares of the bank are taxed at the same per cent on their assessed value as all other property; that the valuation of these shares, on which this rate is apportioned, is only about half their actual value; that some other property is valued at less than half of its cash value, and for this reason no tax should be paid on the shares of stock of the complainant.

And if any should be paid at all, the sum which may in the end be found justly due, and which, during the four or five years of this litigation, must be paid for the support of the government by some one else, shall remain in the complainant's vaults until it is ascertained precisely to the last dollar what each share should pay.

We think the Circuit Court did not err in dismissing such a bill.

Decree affirmed.

184-671
40f-550
103 736 L.ed 456 149 242
103 736 L.ed 456 150 37

HUMPHREY v. BAKER.

No appeal lies from the decree of the Circuit Court entered in accordance with the mandate of this court.

MOTION to dismiss an appeal from the Circuit Court of the United States for the Eastern District of Michigan.

The facts are stated in the opinion of the court.

Mr. Theodore Romeyn in support of the motion.

Mr. John Atkinson, contra.

MR. CHIEF JUSTICE WAITE delivered the opinion of the court.

At the last term, on a former appeal in this case (*Baker* v. *Humphrey*, 101 U. S. 494), we decided "that the complainant, Baker, deposit in the clerk's office for the use of the defendant, George P. Humphrey, the sum of $25, and that Humphrey thereupon convey to Baker the premises described in the bill, and that the deed contain a covenant against the grantor's own acts, and the demands of all other persons claiming under him." A mandate was thereupon issued to the Circuit Court to enter a decree in accordance with this decision, and carry it into effect. Pursuant to this mandate a decree was entered, of which no complaint is made. The money was deposited with the clerk at or before the time of the decree, and immediately thereafter a deed in all respects appropriate in form was prepared and presented to Humphrey for execution. This he neglected to do, and he was ordered to show cause why he should not be attached for contempt on that account. In obedience to this order he appeared and for cause showed —

"1st, That before said decree was entered the Circuit Court gave him leave to file, and he did file, a bill of supplement and review to obtain reimbursement for taxes and improvements paid and made upon the premises in question.

"2d, That said bill was duly filed before said decree was entered, and the complainant, who is the defendant therein, has appeared and demurred thereto, and the same is now pending and undetermined.

"3d, That this defendant has been advised and verily believes that no process would issue against him to compel him to sign the deed in question, until the questions presented by his said bill were disposed of."

Upon the hearing Humphrey was adjudged to be in contempt, and it was decreed that he stand committed to the Detroit House of Correction until he executed the deed, unless sooner discharged by the court.

From this order of commitment the present appeal has been taken, which the appellee now moves to dismiss.

In *Stewart* v. *Salamon* (97 U. S. 361), we decided that we would not entertain an appeal from a decree entered in exact accordance with our mandate on a former appeal, and that when such an appeal was taken we would on application examine the decree, and if it conformed to the mandate, dismiss the case with costs. If it did not, we would remand the case with appropriate directions for the correction of the errors. The decree entered below, in the present case, followed the mandate in every particular, and was in legal effect ours. It commanded Humphrey to convey, and the proceedings in which the order now appealed from was entered were for the purpose of compelling him to do what we said must be done. Instead of carrying our decree into execution ourselves, we sent it below for that purpose. No discretion was given the Circuit Court as to requiring a conveyance. That was ordered here. The order appealed from was in furtherance of our express directions, and may with propriety be considered part of our decree. It was the appropriate way of getting the conveyance which we said must be made. If in the end it shall appear that Humphrey is entitled to the relief he asks, in what he denominates his "bill of supplement and review," the appropriate decree to that end will be made in that proceeding. The decree we directed is the final decree in the original suit, and the court below had nothing to do but to carry it into execution. Under the rule established in *Stewart* v. *Salamon*, therefore, the appeal is

Dismissed with costs.

FOLSOM v. DEWEY.

Stringfellow v. *Cain* (99 U. S. 610) affirmed.

APPEAL from the Supreme Court of the Territory of Utah.

The facts are stated in the opinion of the court.

Submitted by *Mr. Z. Snow*, *Mr. E. D. Hoge*, *Mr. Arthur Brown*, and *Mr. W. N. Dusenberry* for the appellant, and by *Mr. Samuel Shellabarger* and *Mr. Jeremiah M. Wilson* for the appellees.

MR. CHIEF JUSTICE WAITE delivered the opinion of the court.

This case cannot be distinguished in principle from *Stringfellow* v. *Cain*, 99 U. S. 610. The finding is, that the property now claimed by Folsom was sold at public sale on the 11th of March, 1860, to raise money to pay a debt owing by the deceased father of the appellees, who was the original occupant of the premises. The price was five hundred and ten dollars, which was more than the debt. The overplus was paid the mother of the appellees, who were at the time all minors living with her in a house built by the father on an adjoining part of the lot for a residence. The purchaser took possession immediately after the sale, and when the town site was patented under the town-site law, in November, 1871, Folsom, his grantee, had himself been in the actual occupancy of the property for more than ten years, and during that time had made valuable improvements. This, as we think, under the rule in *Stringfellow* v. *Cain*, makes out a case of abandonment on the part of Mrs. Lamareux and her children, and gives Folsom a right to claim title. It is true, the original sale was without the consent of Mrs. Lamareux, but it was with her knowledge. She afterwards took a part of the purchase-money, and suffered Folsom to occupy and improve the property as his own for more than ten years without objection, so far as the findings show. Under these circumstances neither she nor her children can claim that Folsom was in as a trespasser when the title to the town site was secured from the United States for the "use

and benefit of the occupants thereof, according to their respective interests." Folsom was not an intruder on their occupancy, but was himself a lawful occupant.

The evidence satisfies us that the value of the property in dispute is more than $1,000; we, therefore, have jurisdiction.

The judgment against Folsom, who is the only appellant, will be reversed, and the cause remanded with instructions to enter or cause to be entered a judgment in his favor for the premises claimed by him; and it is

So ordered.

GRINNELL v. RAILROAD COMPANY.

1. The grant made to Iowa by the act of May 15, 1856, c. 28 (11 Stat. 9), to aid in the construction of a railroad from Davenport to Council Bluffs, is *in præsenti*, and, with certain exceptions therein specified, it vested in the State the title to every section of public land designated by odd numbers for six miles in width on each side of the road, when the line thereof should be definitely fixed.
2. The act authorized the State, subject to the approval of the Secretary of the Interior, to select, within the limit of fifteen miles of the road, land in alternate sections equal in amount to that which, within the six-mile limit, had been sold or otherwise appropriated by the United States. *Quære*, Does the right to any particular section or part of section, beyond the six-mile limit, vest in the State before the selection of it has been reported to and approved by the proper officer.
3. After the lands had been duly certified to the State or to the railroad company, to which she transferred them, the legal title thereto was subject to be defeated only by the United States, should there be a breach of any condition annexed to the grant, and it was not divested by a change of the location of part of the line of road authorized by the act of June 2, 1864, c. 103 (13 Stat. 95), although they are not situate within twenty miles of the relocated line. Subsequent settlers could, therefore, acquire no right thereto under the pre-emption or the homestead laws.

ERROR to the Supreme Court of the State of Iowa.

The facts are stated in the opinion of the court.

Mr. Saul S. Henkle and *Mr. John S. Hauke* for the plaintiffs in error.

Mr. Thomas S. Withrow for the defendant in error.

MR. JUSTICE MILLER delivered the opinion of the court.

Actions in the nature of ejectment were brought by the Chicago, Rock Island, and Pacific Railroad Company against numerous persons in different courts of the State of Iowa, and heard and decided together by stipulation on appeals to the Supreme Court, where the judgments of the lower courts in favor of the plaintiff were affirmed. The defendants sued out this writ of error.

The plaintiff asserted title under the act of Congress of May 15, 1856, c. 28 (11 Stat. 9), granting lands to the State of Iowa for railroad purposes; and the counsel of the plaintiffs in error correctly states in his brief that the only question presented by the record is, whether the railroad company has under that grant acquired title to any lands within the old fifteen-mile limit of the Mississippi and Missouri Railroad Company, certified to the State under the grant by the Department of the Interior for the benefit of that company, but which were left outside of the new twenty-mile limit by a change of location of the old line, made by the present company under the act of Congress of June 2, 1864, c. 103 (13 id. 95), amendatory of that act.

The material facts on which the decision of this question depends may be thus succinctly stated: By the first act, Congress made a grant to the State of Iowa for the purpose of aiding in the construction of four railroads across the State from points on the Mississippi River to points on the Missouri River. One of these was a road from Davenport to Council Bluffs. The grant was of every alternate section of land designated by odd numbers, for six sections in width, on each side of said roads; and in case it should appear that the United States had, when the lines or routes of said roads were definitely fixed, sold any sections or parts of sections granted as aforesaid, or the right of pre-emption had attached to the same, then the State by its agent or agents might select other odd sections in lieu of those thus deficient, within a limit of fifteen miles on each side of said roads.

The State of Iowa, by an act of its legislature approved July 14, 1856, granted to the Mississippi and Missouri Railroad Company the lands which were by the act of Congress

appropriated to the construction of the road from Davenport to Council Bluffs. That company accepted the grant, and on the eleventh day of September, 1856, filed in the General Land-Office at Washington a map showing the route which it had adopted for its road, some unimportant corrections of which were made by another map filed April 1, 1857.

On the 4th of September, 1858, the agent of the company and the State reported to the General Land-Office the selection of lands in lieu of those which had been sold or to which the right of pre-emption had attached, and on the 27th of December, 1858, the lands thus selected, and those which were in place, were certified to the State by the Commissioner of the General Land-Office. These lands in place and those selected and certified to the State under the act of 1856 include all the lands in controversy in this suit.

By the act of June 2, 1864, Congress authorized a change of location of the uncompleted part of this road, so as to secure a better and more expeditious line for connection with the Iowa branch of the Union Pacific Railroad; and the plaintiff below, which had succeeded to all the rights of the Mississippi and Missouri Railroad Company, availed itself of the privilege thus conferred, and so changed the route as to place it at some points south of the fifteen-mile limits of the grant, as ascertained by the first location, and the road was completed on this route to Council Bluffs in 1869. After all this, the plaintiffs in error settled upon the lands in controversy, which were within the limits of the location made in 1856, and without the twenty-mile limits of the amendatory act of 1864, which will be presently noticed, and proceeded by the appropriate steps to assert rights under the homestead and pre-emption laws of the United States. The Land Department refused to recognize their right to the lands, but being in possession, and sued therefor by the railroad company, they say that the company has no title, because it lost whatever right it had to the lands by the change of the location, and because locating the road as now completed does not bring these lands within the limit of either the original or the amendatory act.

Two inquiries are thus suggested, namely: Had the railroad company acquired a title or a vested right to the lands in con-

troversy prior to the act of 1864, and to the change of location? and, if it had, what was the effect of that change on its right to the lands left by the change outside of the limits prescribed by both acts?

The grant under the act of 1856 was, as has been often said, a grant *in præsenti*, and though exactly what this means has been the subject of much controversy, we think its ascertainment is not difficult. The only doubtful element of the problem is the location of the road, which, by the terms of these grants, is necessary to identify the sections granted on each side of it. Whenever that is done so that a surveyor or the officers of the Land Department can protract the line of the route on the maps of the public lands within the limit of the grants, the identity of the lands granted is mathematically ascertained, and the title relates back to the date of the grant.

So far as lands are found in place when this is done, not coming within the exceptions as sold or held under pre-emption, the title, or at least the right to this land in place, is at once vested in the State or in the company to which the State has granted it, and the means of ascertaining precisely what lands have passed by the grant is to be found in the map of the line of the road, which is filed in the General Land-Office under provisions of the statute. As regards the lands to be selected in lieu of those lost by sale or otherwise, it may be that no valid right accrues to any particular section or part of a section until the selection is made and reported to the land-office, and possibly not then until the selection is approved by the proper officer.

None of these difficulties arise in the present case. The location was made and the map filed in the land-office, the selection of lieu lands was made and approved, and the entire list regularly certified to the State of Iowa, as early as December, 1858, and with this certificate the last act of the United States which could in any event be held necessary to passing the title was performed, and either the State of Iowa or the railroad company — it is immaterial which for the purposes of this suit — had become invested with the full legal title to the lands so certified.

In this condition of affairs the Mississippi and Missouri Rail-

road Company executed, to obtain money to build its road, a mortgage of its road and franchises, which also included the lands granted by Congress to the State and by the State to that company. The road commenced at Davenport, on the Missouri, and was constructed westwardly one hundred and thirty miles when the act of 1864 was passed. In 1866 the mortgage was foreclosed, and the Chicago, Rock Island, and Pacific Railroad Company, under sale at the foreclosure proceeding, and by subsequent consolidation, became the owner of the road, the franchises, and the lands of the former company.

The entire legal title, therefore, to their land had passed, for valuable consideration, to this company.

Did their construction of the road on the new line annul or defeat, without further action on the part of the United States, the title thus vested? It would have been competent for Congress to have made it a condition of the change of location, that the lands within the six-mile or the fifteen-mile limit of the old line, and not within the twenty-mile limit of the new line, should revert to the United States, so far as the title of the company was concerned. But it did not make any such condition. If no law had been passed authorizing the change of route, it is possible the government might have reclaimed these lands as forfeited by reason of the change, to which it had not consented. But Congress did consent to the change without any declaration affecting the title already vested in the company.

The second section of the act of 1864 provided for a grant of land on each side of the new location, and for lieu lands when those could not be found to an amount equal to that granted by the original act of 1856, and it extended the limit for selecting lieu lands to twenty instead of fifteen miles.

It is argued that the lands thus granted were intended as a substitute for those accruing to the company under the first location, and that the latter necessarily reverted to the grantor; that it was the policy of the government that the lands granted should be alongside of the road, and that those retained by the government should thereby be enhanced in value. We are not prepared to deny that if the railroad company had accepted or received lands under the act of 1864, and the case was unem-

barrassed by the rights of subsequent purchasers or mortgagees, the United States could, by a judicial proceeding, enforce the principle that an exchange of lands was intended.

But this would arise from no express language of the act of Congress, or agreement with the company, but as a just and proper inference from the whole transaction.

There is, however, no evidence that the company ever received any land under the act of 1864, or asserted a claim thereto. It appears affirmatively that it never filed in the General Land-Office a map of its new route until 1870, a year after the road was completed; and it is fair to presume that if it intended to assert a claim to land under the changed location, it would have filed its map when the change was made or determined on. We do not think the act can be construed to forfeit the lands to which they had title when they claimed none under the act of 1864.

Another point equally fatal to the plaintiffs in error is, that the assertion of a right by the United States to the lands in controversy was wholly a matter between the government and the railroad company, or its grantors. The legal title remains where it was placed before the act of 1864. If the government desires to be reinvested with it, it must be done by some judicial proceeding, or by some act of the government asserting its right. It does not lie in the mouth of every one who chooses to settle on these lands to set up a title which the government itself can only assert by some direct proceeding.

These plaintiffs had no right to stir up a litigation which the parties interested did not desire to be started. It might be otherwise if the legal title was in the government. Then the land would be subject to homestead or pre-emption rights. But the legal title is not in the government; and as we have already shown, the equity is more than doubtful. *Schulenberg* v. *Harriman*, 21 Wall. 44; *Tucker* v. *Ferguson*, 22 id. 527.

Judgment affirmed.

MR. JUSTICE BRADLEY dissented.

COUNTY OF JASPER v. BALLOU.

The charter of a railroad company in Illinois allowed counties, &c., to subscribe to the stock of the corporation and issue bonds in payment, if a majority of voters, at an election called by the *county court*, should favor the subscription. The voters of a county, which had adopted a township organization, voted in favor of subscribing to the stock at an election called by its *board of supervisors*. A subsequent statute, relating to the company, provides that "all elections held for the purpose of voting said stock, and the manner in which said stock was voted, are hereby legalized in all respects, and the stock to be subscribed in the manner the same was voted." On the authority of this act and the election, the board of supervisors issued bonds of the county. At this time a county court existed in the county. Before the bonds fell due, a statute was passed authorizing municipal corporations, &c., to fund their bonds, which, in brief, declared that in cases where a county, &c., had issued bonds for subscription to railroad companies, &c., "which are now binding or subsisting legal obligations," and "which are properly authorized by law," the county, &c., might, on surrender of such bonds, issue new ones, with the provision that the issue should first be authorized by a vote of the majority of the legal voters of the county, &c. Conformably to this provision, and pursuant to such a vote, the board of supervisors issued, in exchange for the old bonds, funding bonds, having a longer period to run and bearing a lower rate of interest. In a suit against the county by a holder of funding bonds, which he had received in exchange for surrendered bonds, — *Held*, 1. That the vote of the people at the last election recognized the original bonds as binding and subsisting obligations, and that the county is therefore estopped from setting up that they were invalid because voted for at an election called by the board of supervisors instead of by the county court. 2. That where, at an election held according to law, the people of a county authorized their proper representatives to treat certain outstanding county obligations as properly authorized by law for the purpose of settling with the holders, and the settlement has been made, the validity of the obligations can no longer be contested.

ERROR to the Circuit Court of the United States for the Southern District of Illinois.

The facts are stated in the opinion of the court.

Mr. John M. Palmer for the plaintiff in error.

Mr. D. T. Littler, contra.

MR. CHIEF JUSTICE WAITE delivered the opinion of the court.

The Constitution of Illinois, which went into effect April 1, 1848, contained the following: —

"ART. VII., SECT. 6. The General Assembly shall provide by a general law, for township organization, under which any county may organize whenever a majority of the voters of such county, at any general election, shall so determine, and whenever any county shall adopt a township organization, so much of this constitution as provides for the management of the fiscal concerns of the said county by the county court may be dispensed with, and the affairs of the said county may be transacted in such manner as the General Assembly may provide."

Accordingly, in February, 1849, a law was passed authorizing the township organization of counties, and directing that, when such an organization was adopted, the affairs of the county should be conducted by a board of supervisors. Counties not under township organization were managed by county courts.

The Grayville and Mattoon Railroad Company was incorporated Feb. 6, 1857, and on the 1st of March, 1867, its charter was amended so as to allow counties to subscribe to the stock and issue bonds in payment, if a majority of the voters of the county, at an election called by the *county court*, should vote in favor of such a subscription. The county of Jasper, through which the road of the company ran, was under township organization, and its *board of supervisors* called upon the voters of the county to vote at an election to be held on the 7th of April, 1868, whether a subscription of $100,000 should be made to the stock of the company by the county, payable in bonds of the county, to be issued as the work progressed, one-sixth of which were to fall due annually from the time they were put out. The election was held, and resulted in a majority in favor of the subscription. At a meeting of the board of supervisors, Jan. 23, 1863, the chairman was authorized to subscribe the stock as soon as it might legally be done. An act of the General Assembly of the State, approved March 27, 1869 (Acts of 1869, vol. iii. p. 360), relating to this company, and to votes which had been taken for subscriptions to its stock, contained the following as sect. 3:—

"That all elections held for the purpose of voting said stock, and the manner in which said stock was voted, are hereby legalized in all respects, and the stock to be subscribed in the manner the same was voted."

On the authority of these several acts and this election the board of supervisors issued one hundred bonds of $1,000 each, in the following form: —

"Know all men by these presents, that the county of Jasper, State of Illinois, acknowledges itself to be indebted in the sum of one thousand dollars lawful money of the United States of America, which said sum of money the said county promises to pay the Grayville and Mattoon Railroad Company or bearer, at the office of the county treasurer of said county, on the first day of in the year of our Lord one thousand eight hundred and with interest at the rate of ten per centum per annum, which interest shall be payable on the first day of each year, at the office of the treasurer of said county, on the presentation and delivery of the coupons severally hereto annexed.

"This bond is issued under and by virtue of a law of the State of Illinois, entitled an act to incorporate the Grayville and Mattoon Railroad Company, passed February 6, 1857, and amendatory acts thereto in force March 1st, 1867, and March 27, 1869, in compliance with a vote of the electors of said county at an election held April 7, 1868, in accordance with said acts.

"This bond is one of a series limited to one hundred thousand dollars, one-sixth of the amount made payable annually, at ten per centum per annum, issued for stock in the Grayville and Mattoon Railroad Company by the county of Jasper, and placed in trust for delivery only by the trustee herein named, to wit, of the county of Jasper, which shall not become obligatory unless the certificate indorsed hereon be signed by said trustee.

"The faith of the county of Jasper is hereby pledged for the payment of the principal sum and interest aforesaid.

"In testimony whereof, the county of Jasper by its chairman of the board of supervisors of said county and the clerk of the county court as *ex-officio* clerk of said board of supervisors have subscribed this bond this day of A. D. 187 .

"*County Clerk.*

"*Chairman of the Board of Supervisors.*

"I hereby certify that this bond is one of a series of bonds held by me as trustee of the county of Jasper to be delivered to the Grayville and Mattoon Railroad Company as per order of the board as stated therein.

"*Trustee.*"

The bonds fell due, some in 1877 and others in each year thereafter, until and including the year 1883. It nowhere appears when the bonds were put in the hands of the trustee, but none of them bore date prior to Oct. 19, 1876.

At all the times when these several things were done there was in the county of Jasper a county court as well as a board of supervisors.

On the 14th of April, 1875, the General Assembly passed an act, the material part of which is as follows: —

"SECT. 1. That in all cases where any county, city, town, township, school district, or other municipal corporation have issued bonds or other evidences of indebtedness for money on account of any subscription to the capital stock of any railroad company, or on account of or in aid of any public buildings or other public improvement, or for any other purposes which are now binding or subsisting legal obligations against any county, city, town, township, school district, or other municipal corporations, and remain outstanding and which are properly authorized by law, the proper authorities of any such county, city, town, township, school district, or other municipal corporation may upon the surrender of any such bonds or other evidences of indebtedness, or any number thereof, issue in place or in lieu thereof to the holders or owners of the same new bonds, &c. . . . And such new bonds or other evidences of indebtedness so issued shall show on their face that they are issued under this act: *Provided*, that the issue of such new bonds in lieu of such indebtedness shall first be authorized by a vote of a majority of the legal voters of such county, city, town, township, school district, or other municipal corporation, voting either at some annual or special election of such municipal corporation: *And provided further*, that such bonds or other evidences of indebtedness shall not be issued so as to increase the aggregate indebtedness of such municipal corporation beyond five per centum on the value of the taxable property therein, to be ascertained by the last assessment for State and county taxes prior to the issuing of such bonds or other evidences of indebtedness." Acts of 1875, p. 68.

Under the authority of this act the board of supervisors called an election of the voters of the county, to be held on the third day of April, 1877, for the purpose of voting for or against funding the "bonds issued to the Grayville and Mattoon Railroad Company for the sum of $100,000, drawing ten per

cent interest; said hundred bonds to be due in twenty years, and payable at the option of the county in ten years; said bonds to draw interest not to exceed seven per cent per annum, said interest to be payable semi-annually at the treasurer's office in Jasper County." At this election a majority of the voters were found to be in favor of the measure. Afterwards funding bonds were issued in exchange for old bonds in the following form: —

"For value received, the county of Jasper, in the State of Illinois, promises to pay the bearer one thousand dollars on the first day of May, A. D. 1897, with interest from date, payable on the first days of May and November in each year (on surrender of the annexed coupons), at the rate of seven per cent per annum, until the principal sum shall be paid.

"Principal and interest payable at the county treasurer's office, in the town of Newton, in said county. The county of Jasper reserves the right to pay this bond on or at any time after May 1st, 1887, upon giving at said place of payment, and also by an advertisement in some New York City daily newspaper at least six (6) months' notice of such intention, and interest shall cease from the day on which this bond is by such notice made payable.

"This bond is one of a series of bonds numbered from 1 to 100, inclusive, amounting in all to one hundred thousand dollars, issued by said county of Jasper, for the purpose of funding legally incurred indebtedness of the county and under and in accordance with an act of the General Assembly of the State of Illinois, approved April 14th, 1875, entitled 'An Act to amend an act entitled "An Act to enable counties, cities, townships, school districts, and other municipal corporations to take up and cancel outstanding bonds and other evidences of indebtedness, and fund the same,"' approved and in force March 26, 1872, all provisions of which act have been duly complied with.

"In testimony whereof, we, the undersigned, officers of Jasper County, being duly authorized to execute this obligation on its behalf, have hereunto set our signatures and affixed the county seal this day of May, A. D. 1877.

[SEAL.] "*County Clerk.*

"*Chairman.*"

After these bonds were put out the indebtedness of the county exceeded somewhat five per cent of the value of the taxable

property as ascertained by the last preceding assessment. The plaintiff below, and defendant in error here, being the owner of coupons cut from some of the funding bonds falling due in May and November, 1878 and 1879, which were unpaid, brought this suit to recover them. He was the holder and in possession of a part or the whole of the original bonds when the funding took place, and took the funding bonds in exchange for such of the original bonds as he then held.

Upon this state of facts the court below gave judgment against the county. The case is now here by writ of error, and the single question is presented, whether the county made out a valid defence to the coupons sued on.

In our opinion the county is estopped from setting up the alleged invalidity of the original bonds as a defence in this action. It is true the funding law only authorized the funding of "binding and subsisting legal obligations," "properly authorized by law," but no new bonds could be issued in lieu of old ones except on a vote of the people. All outstanding bonds were not to be taken up in this way, but only such as were recognized by the people, acting together in their political capacity at an election for that purpose, as binding and subsisting legal obligations. After such a recognition the corporate authorities could make the exchanges, but not before.

The law under which the original bonds were put out was sufficient. No complaint is made of any illegality in its provisions. The only objection is that there was a mistake in carrying it into execution. The election was called by the wrong corporate agency. The county court should have brought the people together and not the board of supervisors. This, if there had been nothing more, would, under the rulings of the highest court of the State, made long before the vote was taken, render the bonds invalid. *Supervisors of Schuyler Co.* v. *People*, 25 Ill. 181. It was for this reason, undoubtedly, that the board of supervisors, at their meeting after the election, authorized the subscription to be made and the bonds delivered in payment *as soon as it might lawfully be done*, and that the act to legalize the election was passed in 1869. We have not had our attention called to any case in which the courts of the State had decided, before this funding took place, that, under

the Constitution of 1848, an act which simply legalized an invalid or irregular election for a subscription, and left the corporate authorities free to make the subscription at their option, would not cure any defect there may have been in the election, and empower the proper authorities to bind the county by anything that might be done under it and within its scope. It had been decided more than once that the legislature could not *compel* a municipal corporation to incur a debt without the consent of the corporate authorities. *Harward* v. *St. Clair Drainage Co.*, 51 Ill. 130; *Hessler* v. *Drainage Commissioners*, 53 id. 105; *Marshall* v. *Silliman*, 61 id. 218. But under the Constitution of 1848 a vote of the people was not essential to the validity of a municipal subscription to the stock of a railroad company. The legislature could authorize the corporate authorities, whoever they might be, to act in such a matter without the express direction of the people. What it could not do was to make it mandatory on them to subscribe without a vote. This we understand to have been the extent of the decisions, and in this way it was that, if with the legalization of the vote there was coupled a command on the corporate authorities to subscribe, or a confirmation of a subscription already made, the curative statutes were held to be inoperative. It had never been held that language, such as was employed in this curative act, was compulsory, or that it did more than legalize the election, leaving it for the board of supervisors to determine whether they would subscribe or not. That was an open question in the State courts until the case of *Gaddis* v. *Richland County* (92 id. 119), not decided until June, 1879, two years and more after the bonds now in question were out.

When, therefore, the people were called on to vote whether the old bonds should be funded, the facts they had to consider were these: A valid law authorizing the subscription and an issue of the bonds had been passed. The people, at an election which had been irregularly called, had voted to make the subscription and issue bonds bearing ten per cent interest, and all payable within six years. An act had been passed to legalize the election, and under it the subscription which had been voted was made, and bonds such as were contemplated had been issued and were then outstanding in the hands of various par-

ties. Whether these bonds were valid was, so far as any direct decisions were concerned, an open question, and certainly not free from doubt. Under these circumstances the question was directly put to the people of the county, in a manner authorized by law, whether they would recognize these bonds as "binding and subsisting legal obligations," and issue in lieu of them other bonds having twenty years to run and bearing seven per cent interest instead of ten; and they by their vote said they would. There is no complaint of any illegality in this election, or of fraud or imposition. So far as the record shows, the proposition to fund went from the county authorities to the bondholders, and not from the bondholders to the county. The facts were as well known to one party as the other. If the people intended to rely on their defences to the old bonds, then was the time for them to speak and by their vote say they would not recognize them as binding obligations. By voting the other way they, in effect, accepted them as legal and subsisting for the purposes of the proposed extension of time at reduced interest, and said to the holders if their proposition was accepted, no question of illegality would be raised. Their offer having been accepted, they are now estopped from insisting upon an irregularity which they have by their votes voluntarily waived, with a full knowledge of the facts. The case is clearly, as we think, within the principle acted on by the Supreme Court of the State in *President and Trustees of the Town of Keithsburg* v. *Frick*, 34 Ill. 405. As was very properly said below by the learned circuit judge, "there must be an end of these contests and defences some time or other." There must be a time when the people in their political capacity are concluded by their contracts as much as individuals, and we think that where the people of a county, at an election held according to law, authorize their corporate or political representatives to treat certain outstanding county obligations as "properly authorized by law" for the purpose of negotiating a settlement with the holders, and the settlement which was contemplated has been made, all contests as to the validity of the obligations must be considered as ended.

This disposes of all questions as to the excessive issue of bonds. For all the purposes of this case the original bonds

must be taken as binding. The issue of the funding bonds did not increase the aggregate of the indebtedness of the corporation, but only changed its form.

Judgment affirmed.

WILLIAMS v. CLAFLIN.

The ruling in *Jerome* v. *McCarter* (21 Wall. 17), that where, by reason of the changed circumstances of the case, or of the parties, or of the sureties on a *supersedeas* bond, so that the security, which at the time it was taken was sufficient, does not continue to be so, this court will, on proper application, so order and adjudge as justice may require, — reaffirmed, and applied to this case.

APPEAL from the Circuit Court of the United States for the District of South Carolina.

Motion to vacate the *supersedeas*, or for a new bond.

Mr. George F. Edmunds and *Mr. James Lowndes* in support of the motion.

Mr. Philip Phillips and *Mr. Samuel Lord, Jr.*, in opposition thereto.

MR. CHIEF JUSTICE WAITE delivered the opinion of the court.

In *Jerome* v. *McCarter* (21 Wall. 17), we said that if, after security on an appeal which operated as a *supersedeas* had been accepted, the circumstances of the case, or of the parties, or of the sureties on the bond, had changed, so that the security, which at the time it was taken was sufficient, did not continue to be so, we might, on proper application, so adjudge and order as justice should require. The present appellants are interested only in preserving their security for a debt of the railroad company amounting, when the decree was rendered, to about $152,000. When they took their appeal, execution of the whole decree had been stayed by another appeal of the present appellees, who were the complainants below. Consequently the amount of security to be given then by these appellants was a matter of but little importance comparatively. The

other appeal has been dismissed, and in this way the circumstances of the case are materially changed. It is easy to see that what was sufficient security on this appeal when taken is probably not so now. The bonds secured by the mortgage according to the decree amount to several millions of dollars, and the value of the security is necessarily subject to the fluctuations of trade. The appellants are to a considerable extent interested in the same bonds, but if their debt is paid in full they cannot complain at the execution of the decree.

The *supersedeas* herein will be so far modified as to allow a sale of the mortgaged property to be made under the decree, but the court below will retain in its registry, subject to the order of this court until the final determination of the present appeal, so much of the proceeds as shall be sufficient to satisfy and discharge any balance that may remain of the debt due these appellants, after the proportionate share they receive under the decree upon the bonds and coupons held by them as collateral shall have been applied thereon; and it is

So ordered.

115-376
138-460
144-361
143-52

THE "CONNEMARA."

Where salvors united in a claim for a single salvage service, jointly rendered by them, the owner of the property is entitled to an appeal where the sum decreed exceeds $5,000, although the Circuit Court deemed it proper to apportion the recovery among the salvors according to their respective merits.

MOTION to dismiss an appeal from the Circuit Court of the United States for the District of Louisiana, united with a motion to affirm the decree.

Mr. Richard De Gray and *Mr. J. R. Beckwith* in support of the motion.

Mr. Philip Phillips, contra.

MR. CHIEF JUSTICE WAITE delivered the opinion of the court.

The suit below was by a set of salvors to recover for a single salvage service, and there was but one claim filed for the prop-

erty saved. The total amount of the recovery was $14,198, but in the division among the several parties entitled to share in the recovery some got less than $5,000. Separate and distinct interests were not united in the suit. The service rendered was the joint service of all the salvors, and the recovery was on that account. It was a matter of no consequence to the owners of the property saved how the money recovered was apportioned among those who had earned it. The owners were decreed to pay the salvors for what they, acting together in a common service, had done. In such a suit we think the owners cannot be deprived of their appeal because the court below, in the further progress of the cause, saw fit to apportion the recovery among the salvors according to their respective merits. The decree is, in legal effect, one decree in favor of all the salvors, they having, as between themselves, unequal interests.

In all the cases where we have held that several sums decreed in favor of or against different persons could not be united to give us jurisdiction on appeal, it will be found that the matters in dispute were entirely separate and distinct, and were joined in one suit for convenience and to save expense. Thus, in *Seaver* v. *Bigelows* (5 Wall. 208), separate judgment creditors joined to set aside a fraudulent conveyance of their debtor, and the appeal was from a decree dismissing their bill; in *Rich* v. *Lambert* (12 How. 347), several owners of a cargo, who had distinct interests, united in a libel against the ship to recover for damages done to the goods, and the appeal was from a decree in favor of each owner for his separate loss; in *Oliver* v. *Alexander* (6 Pet. 143), the libel was by seamen to recover their wages, and the decree was in favor of each man separately for the amount due him individually; and in *Stratton* v. *Jarvis* (8 id. 4), the decree was against each claimant of the goods saved by salvage service for his separate and distinct share of the salvage. The cases were heard, so far as the merits were concerned, precisely the same as if separate libels had been filed for each cause of action, and the decrees as entered were as in case of separate suits. *Rich* v. *Lambert*, *supra*. Here, however, the matter in controversy was the amount due the salvors collectively, and not the particular sum to which each was entitled when the

amount due was distributed among them. As in *Shields* v. *Thomas* (17 How. 3), "they all claimed under one and the same title. They had a common and undivided interest in the claim, and it was perfectly immaterial to the appellants how it was to be shared among them. If there was any difficulty as to the proportions, . . . the dispute was among themselves."

The case, upon the merits, is one which we are not inclined to consider on a motion to affirm.

Motions denied.

RAILWAY COMPANY *v.* SPRAGUE.

103 756
L.ed 554
52f 103
52f 521

1. A mortgage executed by a railway company, to secure its bonds, provides that, in case of default for six months in the payment of the interest upon either of them, the entire amount of the debt secured "shall forthwith become due and payable," and that the lien of the mortgage may be at once enforced. The bonds themselves declare that, "in case of the non-payment of any half-yearly instalment of interest which shall have become due and been demanded, and such default shall have continued six months after demand," the principal of the bond shall become due, with the effect provided in the mortgage. *Held*, that, the mortgage being a mere security, the terms of the bonds must control in determining when the principal is payable.
2. Overdue and unpaid interest coupons do not of themselves make the bond to which they are attached dishonored paper. *Cromwell* v. *County of Sac* (96 U. S. 51) cited and approved, and *Parsons* v. *Jackson* (99 id. 434) distinguished.
3. The facts in this case show that the appellee is a *bona fide* holder of the bonds in controversy.

APPEAL from the Circuit Court of the United States for the District of Indiana.

The facts are stated in the opinion of the court.

Mr. Joseph E. McDonald and *Mr. James Emott* for the appellant.

Mr. Clarkson N. Potter for the appellee.

MR. JUSTICE WOODS delivered the opinion of the court.

This was a suit in equity in which the Union Trust Com-

pany of New York was complainant, and the Indiana and Illinois Central Railway Company and others were defendants. It was brought for the foreclosure of a mortgage upon the property of the railway company, and it resulted in a decree of foreclosure and sale. An interlocutory decree directed a master of the court to ascertain and report the names of all the holders of bonds and coupons, which had been duly issued under the mortgage, and were entitled to share in the proceeds of the sale.

Under this order of reference Mrs. Henrietta P. Sprague, the appellee, presented a claim to be the owner and holder of seventy-five bonds, numbered from 629 to 703 inclusive, of $1,000 each, with coupons attached. The railway company objected to the allowance of her claim. The master heard the proofs of the parties and the arguments of their counsel, and reported that she had made sufficient proof of her ownership of the bonds in question, and that they were entitled to be paid out of the purchase-money of the road. To this report the railroad company filed exceptions. The court, at the May Term, 1878, overruled the exceptions, and entered a decree directing, among other things, that the seventy-five bonds of the appellee, with the coupons thereto annexed, should be allowed as valid, and as secured equally with the other outstanding bonds by the mortgage foreclosed, and that they should be paid their *pro rata* shares out of the proceeds of the foreclosure. From this order, and this part of the foreclosure decree in the cause, the railway company brings this appeal.

Mrs. Sprague was the widow and administratrix of John H. Sprague, deceased. J. Elliott Condict had long been a friend of her husband, doing business in New York in railway securities, under the style of "Condict & Co., bankers and brokers."

In February, 1870, she loaned Condict $25,000, for which she took his note. Before its maturity he advised her to buy, and offered to sell her, $75,000 of the first-mortgage bonds of the Madison and Portage Railroad Company. She made the purchase for the price of $60,000, and paid that sum partly by giving up to him his note to her for $25,000 money loaned, and the residue in securities at the market price. This purchase was made in November, 1870.

The Madison and Portage Railroad Company failing to pay interest on its bonds, she, on June 24, 1871, at Condict's instance, returned them to him, and received from him in exchange seventy-five bonds for $1,000 each of the Indiana and Illinois Central Railway Company.

These bonds were dated April 1, 1870, and secured by a mortgage or deed of trust of the same date. At the time of the exchange there were attached to each of the bonds which Mrs. Sprague received all the coupons, beginning from the date of the bonds, sixty in number. Of these coupons two, one payable Oct. 1, 1870, and one payable April 1, 1871, for thirty-five dollars each, were past due and unpaid. The bonds contained this provision: "In case of the non-payment of any half-yearly instalment of interest, which shall have become due and been demanded, and such default shall have continued six months after demand, the principal of this bond shall become due in the manner and with the effect provided for in the trust deed securing its payment." The bond also recited that it, together with the residue of two thousand seven hundred and fifty bonds, was secured by a deed of trust or mortgage, dated the first day of April, 1870. The mortgage contained the following clause: "In case default be made for six months in the payment of any interest upon either of said bonds when the same shall become due and payable, the whole principal sum in all and each of said bonds shall forthwith become due and payable, and the lien or incumbrance hereby created for the security and payment of such bonds may be at once enforced, anything herein to the contrary notwithstanding."

Before making the exchange of bonds, Mrs. Sprague had placed the management of the affair in the hands of Mr. John M. Whiting, as her counsel, who, in her behalf, investigated not only the question of the value of the Indiana and Illinois Central Railway bonds, but also of the right of Condict to sell them. At the time of this investigation the Indiana and Illinois Central Railway was not a completed but only a projected road. Condict was vice-president and acting president of the company. There was an executive committee consisting of three members besides the president. These were Condict, Seaman, and Lazare.

Five hundred bonds of $1,000 each, secured by the mortgage of April 1, 1870, had been executed. Before they could be issued they had to be countersigned by the Union Trust Company. They were so countersigned and delivered to the railroad company, and were in all respects regularly executed.

In June, 1871, three hundred of the bonds were delivered by the treasurer of the company to Condict and Lazare, members of the executive committee. They delivered two hundred of them to parties to whom they belonged. The residue remained in the possession of Condict. He did not appear to have any express authority from the company to sell or dispose of them, but claimed to have a lien on them for advances made to the company. There was evidence tending to show, however, that the company had never received consideration for the bonds transferred to Mrs. Sprague, but none to show that she, so far as it regarded any direct notice to her personally, was not a *bona fide* purchaser.

Whiting, in his testimony touching what he learned of Condict's right to transfer the bonds, said: "He came to me with statements, and upon them I acted. He asserted his entire capacity to make the exchange; that he owned the bonds; that he had made advances to the company; that they were his by the highest possible title, and made all the asseverations under my very sharp and close cross-examination. He claimed to own the bonds." Whiting also testified as follows: "Seaman," the colleague of Condict on the executive committee, "assured me of Condict's right to assign them," the bonds. "My memory is very active on this point. He sustained him," Condict, "in every regard."

The error complained of in the part of the decree appealed from is this: It being established by the evidence and reported by the master that the company had never received any value for its bonds either from Mrs. Sprague or any other person, the court erred in holding that she was a purchaser for value and without notice, and that the bonds were instruments of such a character and in such a condition as to enable her to enforce them against the company, notwithstanding the fact that it had received no value for them.

It is not disputed that they, when first executed and made

ready for circulation, had all the qualities of commercial paper. The contention of the appellant is that Mrs. Sprague was not a purchaser in good faith and for value.

It seems to be conceded, and the evidence establishes, that no facts were known to her in relation to them other than those which came to the knowledge of her agent, Whiting. Of course she was bound by what he knew. Does the knowledge of the facts learned by him, and which it is presumed he communicated to her, make her a purchaser in bad faith?

Two facts must be taken as established: *First*, Condict's custody of the bonds was lawful. The appellant admits that it placed them in his possession for safe keeping. *Second*, There can be no question that Mrs. Sprague paid full value for them.

Possession of negotiable bonds carries with it the title to the holder. *Murray* v. *Lardner*, 2 Wall. 110. Mrs. Sprague, therefore, bought the bonds of a person presumptively the owner, and paid for them a full and valuable consideration.

Condict was an officer of the company, and as such had possession of the bonds. If he had told Mrs. Sprague or her agent that he was selling the bonds for the company and as its agent, and had then applied them to the payment of his individual indebtedness to her, her purchase would have been made in bad faith. But this is not the case. Having possession of them, and being *prima facie* their owner, he asserted to her agent in the most positive manner that they were his property. The fact that he was an officer of the company did not of itself preclude him from dealing in them, or throw the slightest suspicion on his title.

The question, therefore, and the only question in the case is, Was there anything upon the face of the bonds and of the mortgage which secured them to put the purchaser on notice? The appellant asserts that there was; that attached to each of the bonds sold to Mrs. Sprague were two unpaid coupons, due respectively October, 1870, and April, 1871, and that this fact, by the terms of the bonds and of the mortgage which secured them, rendered the principal due and payable, and that as a consequence, when she purchased them, they were dishonored paper.

There appears to be a difference between the terms of the bonds and of the mortgage. The mortgage provided, that upon non-payment of interest for six months the principal of the bonds should become due, whether demanded or not. On the other hand, the bonds declared that in case of the non-payment of any half-yearly instalment of interest which had become due and had been demanded, if such default should continue six months after demand, the principal of the bond should become due. A copy of the bonds was set out in full in the mortgage.

The bonds being the principal thing containing the obligation of the company, and the mortgage a mere security to insure the performance of that obligation, the terms of the bonds should control.

Therefore a demand for the payment of her coupons and a failure to pay for six months were necessary to make the principal of the bonds payable. There having been no demand of the overdue coupons, it follows that by the terms of the bonds the principal sum was not due when Mrs. Sprague purchased.

The controversy, therefore, is reduced to this: Did the mere presence upon the bonds purchased by Mrs. Sprague of two past-due unpaid interest coupons make the bonds dishonored paper?

Coupons are separable obligations for the interest payable upon demand. It constantly occurs that they are not demanded for weeks and months, and sometimes years, after they are due. As they bear interest after maturity, it will frequently happen that the owner of a bond who holds it as an investment will keep the coupon for the same purpose.

Bonds executed by a railroad company may not be put upon the market until one or more coupons have matured. The company may cut them off when it sells the bonds, or leave them on to be accounted for in the purchase.

Negotiable bonds have been used as a means of raising money, not only by railroad companies, but by the national government, states, counties, and cities. To hold that the moment an unpaid coupon is left on a bond its character and negotiability are changed would greatly embarrass the

traffic in such securities and lead to endless uncertainty and confusion.

The mere presence, therefore, of two unpaid coupons upon the bonds purchased by Mrs. Sprague was not of itself sufficient evidence of the dishonor of the bonds to which they were attached.

This point has been expressly ruled by this court in *Cromwell* v. *County of Sac*, 96 U. S. 51. In that case, the court, speaking by Mr. Justice Field, said: "The non-payment of an instalment of interest when due could not affect the negotiability of the bonds or of the subsequent coupons. Until their maturity a purchaser for value, without notice of their invalidity as between antecedent parties, would take them discharged from all infirmities." To the same effect see *National Bank of North America* v. *Kirby*, 108 Mass. 497, and *Boss* v. *Hewitt*, 15 Wis. 260.

In *Parsons* v. *Jackson* (99 U. S. 434), the bonds of the railroad company which were the subject of controversy had never been issued, but had been stolen from its office. They were made payable either in New Orleans, New York, or London, as the president of the company might by his indorsement on the bonds determine. They did not contain his indorsement designating the place of payment; they were offered in the New York market and sold for a very small consideration. Coupons for several years, due and unpaid, were attached to them. The court held that all these circumstances affected the purchaser with notice of the invalidity of the bonds.

It is true the court said that the presence of the past-due and unpaid coupons was of itself an evidence of dishonor sufficient to put the purchaser on inquiry. But the case did not turn on this circumstance alone. There were other significant indications of the invalidity of the bonds, and the opinion must be restricted to the case before the court.

But conceding for the sake of argument that the possession of two unpaid coupons on the bonds purchased by Mrs. Sprague had been sufficient to put her on inquiry, she can only be charged with knowledge of the facts which she might have learned by inquiry.

Investigation would have disclosed to her, as the record

shows, that the construction of the road of the company by which the bonds were issued was just begun; that of the twenty-seven hundred and fifty bonds, for one thousand dollars each, which the mortgage was executed to secure, only five hundred had been signed and prepared for circulation; that these bonds had not been put upon the market for sale, but that a part of them had been used as collateral security for debts due from the company, and that those sold to her had not been put in general circulation, but, after their execution, had been turned over to Condict, the vice-president of the company, who, on account of his advances to it, claimed to be their owner, and that none of the coupons on any of the five hundred bonds had been paid. If, therefore, Mrs. Sprague had investigated the reason why the two past-due coupons, on the bonds which she purchased, had not been paid, these facts would have afforded a most satisfactory explanation.

"The party who takes negotiable coupon bonds, before due, for a valuable consideration, without knowledge of any defect of title and in good faith, holds them by a title valid against all the world. Suspicion of defect of title, or the knowledge of circumstances which would excite such suspicion in the mind of a prudent man, or gross negligence on the part of the taker at the time of the transaction, will not defeat his title. That result can be produced only by bad faith on his part." *Murray* v. *Lardner*, 2 Wall. 110.

"Bonds for the payment of money, with interest warrants attached, are everywhere encouraged as a safe and convenient medium for the settlement of balances among mercantile men; any course of judicial decision calculated to restrain or impede their free and unembarrassed circulation would be contrary to the soundest principles of public policy.

"Such instruments are protected in the possession of an indorsee, not merely because they are negotiable, but also because of their general convenience in mercantile affairs." *Smith* v. *Sac County*, 11 Wall. 139.

The inference to be drawn from these authorities, when applied to the facts in this case, is that Mrs. Sprague was a *bona fide* purchaser for value of the bonds transferred to her by Condict.

Our conclusion, therefore, is that the Circuit Court was right in directing a *pro rata* payment to be made on her bonds out of the proceeds of the property in which they were secured.

Decree affirmed.

130-208
132-218
40 L-550

HINCKLEY v. MORTON.

Where the appellee has a color of right to the dismissal of an appeal, he may unite with a motion therefor one to affirm the decree.

108 764
L.ed 458
51 f 981

MOTION to dismiss an appeal from the Circuit Court of the United States for the Southern District of Illinois, with which is united a motion to affirm.

Mr. R. Biddle Roberts in support of the motions.
Mr. Leonard Swett and *Mr. Philip Phillips, contra.*

MR. CHIEF JUSTICE WAITE delivered the opinion of the court.

Our jurisdiction of this case is clear. The appeal is not from the decree entered on our mandate at the last term in *Hinckley* v. *Railroad Company*, 100 U. S. 153. On the contrary, that decree has been satisfied by an actual payment of the amount found due. The case does not, therefore, come within the rule laid down in *Stewart* v. *Salamon* (97 id. 361), where we held that an appeal would not be entertained from a decree rendered by the court below in accordance with our mandate on a previous appeal. The record now presented shows that after our decision at the last term, in which, among other things, Hinckley, the appellant, was allowed $10,000 for his services as receiver from the time of his appointment in the Kelly suit, he went into the State court and had that suit reinstated. He then applied to that court to fix his compensation as receiver. That was done, and resulted in an allowance to him of something more than $24,000. As soon as that order in his favor was made, he filed an intervening petition in the Circuit Court, asking that the amount so allowed him might be paid out of the fund in the Circuit Court belonging to the Morton suit. This

was refused, and from the order to that effect, which was a final decree on the intervening petition, this appeal was taken. Second appeals have always been allowed to bring up proceedings subsequent to the mandate and not settled by the terms of the mandate itself. *Supervisors* v. *Kennicott*, 94 id. 498; *Tyler* v. *Magwire*, 17 Wall. 253. This case comes clearly within that rule, and the motion to dismiss is, therefore, denied.

But we think the motion to affirm should be granted. The question of compensation to the receiver, so far as the fund in the Circuit Court is concerned, was settled on the former appeal. The allowance then made was for the entire services of the receiver from the date of his original appointment in the Kelly suit. The value of the services was made, by the exceptions to the master's report, a matter of special inquiry, and the result is indicated in the judgment which was then given. If the State court has funds in its hands out of which its judgment can be paid, it has full power to order the payment, but the liability of the fund in the Circuit Court to the receiver has already been fully discharged. The court below was right, therefore, in refusing the prayer of the appellant in his intervening petition, and its order to that effect is

Affirmed.

A petition for a rehearing having been filed, MR. CHIEF JUSTICE WAITE delivered the opinion of the court.

Rule 6, par. 4, as amended Nov. 4, 1878, 97 U. S. vii, provides that there may be united with a motion to dismiss a writ of error or appeal, a motion to affirm, on the ground that, although the record may show that this court has jurisdiction, it is manifest the appeal or writ of error was taken for delay only, or that the question on which the jurisdiction depends is so frivolous as not to need further argument. This is a modification of the rule as originally promulgated May 8, 1876, 91 U. S. vii, when it was confined to motions to dismiss writs of error to a State court. In *Whitney* v. *Cook* (99 U. S. 607), we held that to justify a motion to affirm under this rule there must be a motion to dismiss and at least some color of right to a dismissal.

In *Stewart* v. *Salamon* (97 U. S. 361), we decided that if an

appeal was taken from a decree entered on our mandate upon a previous appeal, we would, on the application of the appellee, examine the decree entered, and if it conformed to the mandate, dismiss the case, with costs. The motion to dismiss in this case was apparently based upon that ruling. It seemed to us, when it was up for hearing, to have been made in good faith; and while we did not think it ought to be sustained, we could not say it was without any color of right. For that reason we felt at liberty to look into the motion to affirm.

The record in this case showed that Hinckley was appointed receiver in the Kelly suit Nov. 24, 1879, and that his receivership ended by his turning over the property to the trustees of the mortgage on the 12th of August, 1875. The record of the former appeal, to which we think we may with propriety look, as the order now appealed from was made upon a petition of intervention filed in that cause, shows that in the settlement of accounts then made Hinckley was paid for his services during the whole period of his receivership, that is to say, from the date of his appointment in the Kelly suit until his final discharge.

We are still of the opinion that the case is a proper one for the application of our rule in respect to motions to affirm, and, therefore, the petition for a rehearing is

Denied.

CLARK v. KILLIAN.

1. The settlement of lands by a man upon his wife is not invalid, if the rights of existing creditors are not thereby impaired.
2. A bill of review is the appropriate mode of correcting errors apparent on the face of the record, and it was in this case filed in time, less than two years having elapsed since the original decree was passed.
3. The court will not consider errors assigned by the appellee.

APPEAL from the Supreme Court of the District of Columbia.

The facts are stated in the opinion of the court.

Mr. Francis Miller for the appellant.

Mr. William J. Miller, contra.

MR. JUSTICE HARLAN delivered the opinion of the court.

On the 24th of June, 1873, Clark, the appellant, obtained in the court below a judgment at law against John Killian, administrator of William Schlorb, for the sum of $3,819.25, the balance due from the deceased upon dealings with appellant, commencing on the twenty-second day of November, 1865. An execution upon the judgment having been returned no property found, Clark exhibited there his bill in equity against the administrator *de bonis non*, the widow, and infant children of Schlorb, for the purpose of subjecting to the satisfaction of the judgment certain real estate which stood in the name of the wife and an infant son of Schlorb.

The real estate is thus described in the bill: 1. Lots 6 and 9, in square 654, of the city of Washington, conveyed Aug. 18, 1858, by Schlorb to John Killian, since deceased, in trust for the use of his wife, and free from liability for the debts of the grantor. 2. Lots 5 and 8, in the same square, conveyed Oct. 23, 1858, to the same person in trust for the sole and separate use of the wife, and free from liability for the husband's debts. 3. Lot 2, in the same square, purchased by Schlorb from Baker and by the latter, in pursuance of directions from the father, conveyed, Oct. 5, 1865, to his infant son, George L. Schlorb. 4. Lot 3, in the same square, purchased by Schlorb from Brown, and by the latter, in pursuance of directions from the husband, conveyed, Dec. 21, 1865, to Killian, in trust for the sole and separate use of the wife, and free from the control of the husband. 5. The north half of lot 7, in the same square, purchased by Schlorb from Budle, and by the former's direction conveyed, May 3, 1866, to, Killian in like trust for the sole and separate use of the wife, and free from the husband's control. 6. Lot 1, in the same square, conveyed by Schlorb, Dec. 23, 1868, to Killian in trust for the benefit of the wife, and free from the husband's control.

The bill alleges that these several conveyances were by Schlorb made and caused to be made with the intent to hinder, delay, and defraud his creditors.

The answer of the widow was explicit in its denial of the fraud charged, and alleged that the deceased, when the several

conveyances were made, was free from debt, in comfortable circumstances, and engaged in a prosperous business; that only one piece of the property was conveyed in trust for her, after the dealings between Clark and him commenced and were in progress. The infant children made a formal answer, by their mother, as guardian *ad litem*, submitting their rights to the protection of the court. An answer containing full denials was also filed by the administrator *de bonis non* of Schlorb. Clark filed his joinder of issue on the answers to his bill, and the cause was submitted on bill and answers and replications, without proof.

On the 17th of February, 1875, the court rendered a decree adjudging that the conveyances for lots 1, 3, and the north half of lot 7 were null and void, and they were sold under the decree for the sum of $1,403.47.

Subsequently, on 18th June, 1875, a similar decree was rendered as to lots 2, 5, 6, 8, and 9. They were also sold, and at the commencement of this suit the title was in Clark, the appellant.

On the 4th of January, 1877, a bill of review was filed by the administrator *de bonis non*, the widow, and infant children of Schlorb against Clark, for the purpose of setting aside the foregoing decrees for errors of law apparent on the face of the record. The bill set out all of the foregoing facts, including the pleadings in the original suit, and Clark demurred. The demurrer was sustained and the bill dismissed. Upon appeal to the general term the decree of dismissal was reversed and the demurrer overruled. The cause was then submitted on the bill of review. Judgment was rendered setting aside the former decree as to lots 2, 5, 6, 8, and 9, and affirming the one as to lots 1, 3, and the north half of 7.

From the last decree both sides prayed an appeal to this court.

The decree of the court below, so far as it relates to lots 2, 5, 6, 8, and 9, is in all respects right. Upon the face of the bill, answers, and other pleadings in the original suit, there was no ground whatever to assail the conveyances of those lots. They were made before Clark had any dealings with Schlorb,

and when, so far as the pleadings in that case disclose, there were no creditors who could complain of any such disposition by Schlorb of his property. Clark, therefore, could not have given credit to Schlorb upon the faith of his ownership of the property. The answers denied the allegations of fraud, and there was no evidence to overcome the denials. The pleadings in that case did not authorize the conclusion, as matter of law, that Schlorb had conveyed or caused to be conveyed the property with the fraudulent intention of thereafter engaging in business, or having business transactions, and, in the event of financial embarrassment arising therefrom, to withhold it from his creditors. Taking all the circumstances to be as they are set out in the pleadings, it is perfectly clear that the court, in adjudging the conveyances of the lots above named to be null and void, and ordering them to be sold in satisfaction of Clark's judgment, erred in point of law. Consequently a bill of review was the proper mode of remedying that error. The present bill was filed in time. *Thomas* v. *Harvie*, 10 Wheat. 146.

The appeal prayed by appellees in the court below from so much of the decree as confirmed the original decree as to lots 1, 3, and north half of 7, has never been perfected. We cannot, therefore, notice the errors assigned in the brief of counsel for appellees.

The decree below, so far as appealed from by Clark, is, without prejudice to any right which the appellees may have to an appeal,

Affirmed.

WHITSITT v. RAILROAD COMPANY.

The act of March 3, 1875, c. 137 (18 Stat., pt. 3, p. 470), did not change the jurisdiction of this court to review the final judgment or decree of the Circuit Court.

APPEAL from the Circuit Court of the United States for the District of Colorado.

Mr. Amos Steck for the appellants.
Mr. Bela M. Hughes, contra.

MR. CHIEF JUSTICE WAITE delivered the opinion of the court.

Although the act of March 3, 1875, c. 137 (18 Stat., pt. 3, p. 470), gave the circuit courts of the United States original cognizance of suits of a civil nature arising under the Constitution and laws of the United States, where the matter in dispute exceeds, exclusive of costs, the sum or value of $500, it did not change our jurisdiction for the review of the judgments and decrees of those courts. That depends now, as it did before, on the value of the matter in dispute, which must exceed $5,000. This record does not show in express terms or by fair implication that the value of the property in controversy reaches that sum.

Appeal dismissed for want of jurisdiction.

COUNTY OF WILSON v. NATIONAL BANK.

1. The Circuit Court has jurisdiction of suits by or against a national bank, without regard to the citizenship of the parties.
2. A bond, whereby a county acknowledges its indebtedness in a certain sum, payable, at a time therein mentioned, to company A. or the holder, if it "be transferred by the signature" of its president, is negotiable, and, on his transfer thereof by indorsement to "bearer," the latter may in his own name sue thereon.
3. The county court of Wilson County, Tennessee, had, after certain preliminary proceedings were taken, lawful authority to subscribe, on behalf of the county, for stock in the Tennessee and Pacific Railroad Company, and to issue bonds of the county in payment therefor.

4. It was not essential to the validity of the popular election, ordered and held on the question of subscription to the stock, that there should have been a final and definite survey and location of the entire line of the company's road. All that was required was a substantial location, designating the termini and general direction of the road, and an estimate of the cost of constructing it.

ERROR to the Circuit Court of the United States for the Middle District of Tennessee.

The facts are stated in the opinion of the court.

Mr. Joseph S. Fowler for the plaintiff in error.

Mr. R. McPhail Smith, contra.

MR. JUSTICE WOODS delivered the opinion of the court.

On Dec. 16, 1867, the legislature of the State of Tennessee passed "An Act to incorporate the Lebanon and Gallatin Railway, and for other purposes."

Sect. 3 of the act provided that the twenty-six persons named in sect. 1 should select by ballot five of their number to open books for subscription to the stock of the Lebanon and Gallatin Railway Company, and to apply to counties and municipalities for subscriptions thereto. Sect. 4 declared that such subscriptions might be payable in county and municipal bonds.

Sect. 19 declared as follows: —

"The five commissioners provided for in the third section may apply to the county courts of Sumner and Wilson Counties, and to the corporate authorities of the towns of Lebanon and Gallatin for subscription to the capital stock of the company, payable in the bonds of said counties and towns, running not less than ten nor more than thirty years, bearing six per cent interest payable semi-annually, and upon said application being made in writing the county courts and corporate authorities shall cause an election to be held under the laws now in force regulating elections for county and corporate officers, first causing thirty days' notice of the day of such election, the amount of stock to be subscribed, for what purpose and how and when payable, to be given as required in county and corporate elections."

Sect. 35 declared "that the provisions of chapter 3, article 3, of the code [of Tennessee] shall be in force, and said company shall have the benefit of the same except so far as modified or changed by this act."

These provisions were by sect. 40 extended to the Tennessee and Pacific Railroad Company.

Chap. 3, art. 3, of the Code of Tennessee provides as follows: —

"SECT. 1142. Any county . . . may subscribe to stock to an amount not exceeding in the aggregate one-fifteenth of its taxable property nor more than one million dollars in railroads running to or contiguous, thereto, upon the following terms and conditions.

"SECT. 1143. The approbation of the legal voters of the county . . . to the proposed subscription must be first obtained by election held by the sheriff in the usual way in which popular elections are held.

"SECT. 1144. The election may be ordered by the county court upon the application in writing of the commissioners appointed to open subscription books for the stock of such road, or of the board of directors if the company is organized.

"SECT. 1145. Before such application can be made, the entire line of the road in which the stock is proposed to be taken, shall be surveyed by a competent engineer, and substantially located by designating the termini and approximating the general direction of the road, and an estimate of the grading, embankment, and masonry made by the engineer under oath, and filed with the application."

"SECT. 1149. The money raised under the provisions of this article shall be expended within the county in which such stock is taken, or as near thereto as practicable.

"SECT. 1150. As soon as the stock is subscribed it is the duty of the county court to levy a tax upon the taxable property, privileges, and persons liable by law to taxation within the county, sufficient to meet the instalments of subscription as made and the cost and expenses of collection, which tax shall be levied and collected like other taxes.

"SECT. 1151. The revenue-collector or any other person may be appointed by the county authorities to collect the railroad tax, who shall first give bond with good security in double the amount of the instalment proposed to be received, payable to the State and conditioned to discharge the duties of the office and faithfully collect and pay over to the railroad company such railroad tax."

The suit was brought by the Third National Bank of Nashville, Tennessee, upon two hundred and ninety-four bonds for $50 each, issued, as the plaintiff claimed, by the county of

Wilson under authority of the laws above cited. The bonds were all of the same tenor and effect. The following is a copy of one of them: —

"UNITED STATES OF AMERICA.

"State of Tennessee. County of Wilson.

"Six-per-cent Bond.

"Subscription to the Tennessee and Pacific Railroad Company.

"Know all men by these presents, that the county of Wilson, in the State of Tennessee, is indebted to the Tennessee and Pacific Railroad Company, or the holder hereof, if this bond is transferred by the signature of the president of said company, at the office of the treasurer of said county, in the city of Lebanon, on the first day of January, 1879, with interest thereon at the rate of six per cent per annum, on the first day of January and July ensuing the date hereof, until the principal sum is paid, upon the presentation and surrender of the interest-warrants hereto attached at the said office of the treasurer of Wilson County, State of Tennessee, — this being one of a series of bonds in all amounting to $300,000 issued for stock in the Tennessee and Pacific Railroad Company.

"In testimony whereof, the county judge of said county hereunto sets his name and causes the seal of the said county of Wilson to be affixed, with the attestation of the clerk of said county, this first day of January, 1869.

"W. H. GOODWIN, *Judge County Court.*

"J. S. MCCLAIN, *Clerk.*"

The bonds were all indorsed as follows: —

"For value received, this bond is transferred to bearer.

"GEO. MAURY, *President Tenn. & Pacific R. R. Co.*"

The defendant demurred to the declaration. The grounds of demurrer were, first, because the court had no jurisdiction of the case; and, second, because no right of action on said bonds was shown by the declaration to have accrued to the plaintiff.

The demurrer was overruled.

The defendant thereupon filed twelve pleas. Demurrers were filed to all of them, and were sustained as to the fourth, fifth, sixth, seventh, eighth, ninth, and tenth, and overruled as to the others.

The ninth plea, upon which the defendant specially relied, and which contains the substance of all the other pleas to which the demurrer was sustained, reads as follows: —

"And for a further plea to said first count in plaintiff's declaration, defendant says that before application was made by any authorized commissioners or by the president and directors of the Tennessee and Pacific Railroad Company to the county court of said county of Wilson, to order an election to obtain the approbation of the legal voters of said Wilson County to any proposed subscription of stock in said company, no survey of the entire line of said road had been made by a competent engineer, and the said road had not been substantially located by designating the termini thereof and approximating the general direction thereof, and no estimate of the grading, embankment, and masonry by a competent engineer of the entire road had been made, and of all said facts the plaintiff had actual notice when it obtained the said bonds; and it does not appear upon the face of said bonds or any of them upon what authority they were executed and delivered to the said company other than that of the ministerial officers whose signatures appear thereto; and this defendant is ready to verify."

The ground of demurrer to this plea was that it was virtually the plea of *non est factum* and was not sworn to.

Upon the trial of the case the plaintiff offered in evidence the bonds on which the suit was brought, and proved their execution by the officer whose official signature was appended to them, and by the impression on them of the county seal, and proved the indorsement of them by George Maury, the president of the Tennessee and Pacific Railroad Company. The plaintiff also read the acts of the legislature of Tennessee above mentioned, and rested.

Thereupon the defendant introduced one Falconett, who testified that he was engineer of the Tennessee and Pacific Railroad Company; that as such he had made an experimental survey of the entire line of the road from Nashville to Knoxville, before any application was made to the county to order an election, as provided by the statute, to determine whether it should subscribe to the capital stock of the company, and, if so, on what terms the subscription should be

made; that the survey of one hundred and eighty-one miles was not final, but that by it the line was substantially, and the main points of said road definitely, located, and an approximate estimate of the cost of the road made; that he afterwards had located finally and definitely about one-half of the entire line, and made a report thereof to the directors of the company.

It was after this report that application was made to the defendant as per statute in that case made and provided, to order an election and subscribe stock, &c., for the payment of which the bonds sued on were issued.

The plaintiff proved in rebuttal the payment of interest on the bonds by the county for several years. This was all the evidence in the case.

The court charged the jury as follows:—

"1. That the defendant county had legislative authority to issue the bonds declared on, upon the conditions prescribed in the acts having reference to the matter, and that if the jury find from the evidence adduced in the case that said bonds had been issued by the county judge and clerk as alleged and verified by the county seal, and that plaintiff was a *bona fide* holder for value without notice, that the same was issued by virtue of an election ordered and held before a final and definite survey and location of the line of said road had been made, the same would be valid in the plaintiff's hands, and the jury ought to find a verdict against defendant.

"2. That if the evidence of Falconett were true, the condition contained in the acts aforesaid, requiring a survey and location of the line of said road, and an estimate of the cost thereof made before an election to determine whether the county should subscribe stock in said railroad, &c., could be lawfully ordered and held, had been substantially complied with, and there was nothing in Falconett's testimony militating against plaintiff's right to recover."

The jury found a verdict for the plaintiff, on which judgment was rendered. To reverse this judgment this writ of error is brought.

The plaintiff in error claims that it is apparent on the face of the declaration that the Circuit Court was without jurisdic-

tion, because both the parties were citizens of the State of Tennessee.

Sect. 629 of the Revised Statutes of the United States declares that the circuit courts shall have original jurisdiction as follows: . . . "*Tenth.* Of all suits by or against any banking association established in the district in which the court is held, under any law providing for national banking associations."

This section gives the circuit courts jurisdiction of suits brought by or against a national bank, without regard to the citizenship of the parties, and it has been so held by this court. *Kennedy* v. *Gibson*, 8 Wall. 498.

The jurisdiction of the Circuit Court was, therefore, clear.

It is next claimed that the bonds sued on were not negotiable paper, and that, therefore, the plaintiff below showed no right of action in itself.

In order to make a promissory note or other obligation, for the absolute payment of a sum certain, on a certain day, negotiable, it is not essential that it should in terms be payable to bearer or order. Any other equivalent expressions demonstrating the intention to make it negotiable will be of equal force and validity. Com. Dig., Merchant, F. 5; 3 Kent, Com., lect. 44, p. 77; Chitty, Bills, c. 5, p. 180 (8th ed.); Bayley, Bills, 120 (5th ed.); Story, Prom. Notes, sect. 44.

The purpose of the plaintiff in error that the bonds on which the suit is brought should be negotiable is perfectly clear. They are payable to the railroad company or holder if the bond is transferred by the signature of the president of the company.

This is equivalent to making the bonds payable to the company or order, provided the "order" or indorsement is made by the president of the company. They bear his indorsement transferring them to bearer. On what ground their negotiability can be denied it is difficult to imagine. They are in precisely the same plight as a promissory note payable to order and indorsed in blank, or to bearer, the title to which passes by mere delivery. Chitty, Bills, 252, 253 (8th ed.); Bayley, Bills, c. 1, sect. 10, p. 31 (5th ed.).

It is next objected that the court erred in sustaining the

demurrer of the plaintiff to the fourth, fifth, sixth, seventh, eighth, ninth, and tenth pleas.

It is quite evident, however, from the record that all the defences set up in these pleas were allowed to be made under the other pleas, to which the demurrers were overruled. Whether the court was right or wrong in its judgment on the demurrers is, therefore, entirely immaterial. "There must be some injury to the party to make the matter generally assignable as error." *Greenleaf's Lessee* v. *Birth*, 5 Pet. 132; *Randon* v. *Toby*, 11 How. 493.

It is next alleged as error that the court instructed the jury that the county of Wilson had legislative authority to issue the bonds sued on, upon compliance with the conditions prescribed by the law.

There is certainly no express provision in chap. 8, art. 3, of the code which authorizes the issue of bonds. It has been so held by the Supreme Court of Tennessee. *Justices of Campbell Co.* v. *Knoxville & Kentucky Railroad Co.*, 6 Cold. (Tenn.) 598. The implication against the power to issue bonds is very persuasive. The act contemplates the payment of the stock subscribed for in instalments, and provides the means of payment, as they fall due, by a special tax. The bond of the officer who collects this tax requires him to pay it over to the railroad company. If the purpose of the act had been to authorize the payment of the stock in bonds, the county, after paying in bonds, would not have been required to pay over to the railroad company the railroad tax collected to satisfy the bonds. In other words, the county would not have been required to pay twice for its stock, — once in bonds and once in money. See *Wells* v. *Supervisors*, 102 U. S. 625.

But the act of Dec. 16, 1867, to incorporate the Lebanon and Gallatin Railway Company, some of the provisions of which have been stated, clearly implies the power in the county authorities to subscribe stock in the Tennessee and Pacific Railroad Company, and to issue bonds in payment therefor.

Sect. 4 declares that subscriptions to the capital stock of the railroad company may be taken in county bonds, and sect. 19 authorizes the commissioners provided for in sect. 3 to apply for a subscription to the capital stock of the railroad company,

payable in the bonds of the county, whereupon the county authorities are required to cause an election to be held, first causing thirty days' notice of such election, the amount of stock to be subscribed, for what purpose, and how and when payable, to be given, as required in county elections.

There can scarcely be a stronger implication of the power to issue bonds.

What is implied in a statute is as much a part of it as what is expressed. *United States* v. *Babbit*, 1 Black, 55; *Gelpcke* v. *City of Dubuque*, 1 Wall. 175.

We think, therefore, that the power of the county, under the act of Dec. 16, 1867, to issue bonds in payment of stock taken by it in the Tennessee and Pacific Railroad Company is beyond question, and that the Circuit Court did not err in saying to the jury that such power existed.

Plaintiff in error claims next that there was evidence tending to show that the bonds in suit were issued by virtue of an election ordered and held *before* a final and definite survey and location of the railroad had been made, and that the court erred in instructing the jury that, if plaintiff was a *bona fide* holder without notice of that fact, the bonds would be valid in his hands, and there should be a verdict against defendant.

The charge was not erroneous, because the law does not require that there shall be a final and definite survey and location of the road before an election is held to decide whether or not the county shall subscribe stock. Its requirement is that the entire line of the road shall be surveyed by a competent engineer, and substantially located by designating the termini and approximating the general direction of the road. The evidence of Falconett, the engineer, showed that this had been done.

The law even contemplated that this survey might be made before the railroad company was organized, for it declared that the application to the county authorities to order an election might be made by the commissioners appointed to open subscription books for the stock of such road, or by the board of directors if the company was organized. It would be a strange enactment, indeed, which should require a final and definite

survey and location of the line of a railroad before any company had been organized to construct it.

The next complaint of the plaintiff in error has reference to the charge of the court to the effect that, if the evidence of Falconett, the engineer, were true, the election to decide whether the county would subscribe to the stock of the railroad company was lawfully held.

The contention seems to be that before an application could be made to the county authorities to order an election to decide whether or not the county should subscribe to the stock of the railroad company, an estimate in linear and cubic feet and yards of the embankment, grading, and masonry should be made, on oath, and filed with the application. It is asserted that no such estimate of quantity was made, but merely an estimate of the cost, and that this was not a compliance with the law.

We think the Circuit Court gave a correct construction of the law in instructing the jury substantially that it was an estimate of the cost and not of the quantity of the grading, embankment, and masonry that was required to be made by the engineer. The point upon which information was necessary to enable the people of the county to vote intelligently on the question whether or not they should subscribe to the stock of the railroad company was what would the road cost, and not how many yards of embankment or excavation or what quantity of masonry would be required to construct it.

If we are right in these views, then all the conditions precedent upon authority of which the power to issue bonds depended were performed, and there being legislative authority for the issue of the bonds upon such performance, no valid objection can be raised to their enforcement.

Judgment affirmed.

136-157

LIFE INSURANCE COMPANY v. BANGS.

Where there has been no newly discovered evidence, a bill in equity will not lie to cancel a contract or enjoin a judgment thereon, where the complainant, against whom it was rendered, sets up as grounds of relief matters which he had full opportunity to plead in the action at law.

APPEAL from the Circuit Court of the United States for the District of Minnesota.

The facts are stated in the opinion of the court.

Mr. Herbert L. Baker and *Mr. William A. Maury* for the appellant.

Mr. Mark S. Brewer for the appellee.

MR. JUSTICE FIELD delivered the opinion of the court.

In the case of *Insurance Company* v. *Bangs*, *supra*, p. 435, we had occasion to mention and comment upon a suit in equity, commenced in March, 1876, by the same company against these defendants, in the Circuit Court of the United States for the District of Michigan, to obtain the cancellation of two policies of insurance, issued in November, 1875, upon the life of James H. Bangs. That case was an action at law upon the policies, to which the company pleaded the decree obtained in the equity suit. This decree was held to be void as against the infant defendant, because rendered by the court without having obtained jurisdiction over him. As all other defences except such as arose upon this decree were withdrawn, judgment was rendered in favor of the plaintiff for the amount claimed.

The present suit is similar in its character and object to the one brought in the Michigan district. It seeks a cancellation of the two policies of insurance obtained by the deceased and an injunction against the enforcement of the judgment recovered in the action at law. The bill avers that the policies were obtained upon representations that the insured was a person of good health and not subject or predisposed to any bodily infirmity; that at the time he applied for the policies he had conceived the design to commit suicide, but first to obtain an

insurance upon his life in favor of his son in order to leave a large amount to him and to his wife; that in pursuance of this design the policies were obtained, and soon afterwards he committed suicide by taking poison; and that the wife and son were cognizant of the design of the deceased and conspired with him for its execution.

The bill charges a fraudulent purpose on the part of the insured to rob the insurance company, and then that he committed suicide to carry the purpose into execution. It charges a conspiracy between him and his wife and son to effect this robbery and death, — a conspiracy on the part of the wife to aid in the death of her husband, and on the part of the son to aid in the death of his father. These charges are of such dreadful crimes as to call for the clearest proof before a decree cancelling the policies could be based upon them. Instead of such proofs there is nothing of importance established which is not consistent with the integrity of all the parties, — insured, wife, and son. The main and essential fact averred in the company's case is the contemplated suicide of the insured. The evidence to establish this — and it is stronger than the evidence produced upon any other material averment — is that he had inquired for insurance companies whose policies did not except death by suicide; that his death occurred not long after the policies were obtained, and was accompanied by convulsions stated to be similar to those attending death by strychnine. There is no evidence that he ever had any strychnine. The only evidence produced was that he was once seen in a druggist's store looking at jars containing various medicines, and among others, one that contained this poison. There was no poison found in his body when submitted to a post-mortem examination. And as to the convulsions at his death, the wife attributed them to injuries which he had received in his back a few days before. That is all. Everything else consisted of mere suspicions growing out of the action of the wife in refusing to consent to a post-mortem examination of the deceased, and her departure from the State, both of which might have been, and, according to her answers to the interrogatories of the bill, were prompted by worthy considerations. The transactions with which she is charged as proof of guilty complicity,

viewed in the light of her explanations and the evidence produced, merely evince a very natural sensitiveness to the imputations cast upon the character of her husband by suspicions thrown out by agents of the insurance company, and a great repugnance to having his remains, after interment, disturbed and subjected to the knife of the surgeon and the analysis of the chemist. It is sufficient to say that no case is presented which would justify any court in holding that a conspiracy existed to defraud the insurance company, the execution of which involved the suicide of the insured, and the assent of wife and son to the death of husband and father.

Aside from this, the judgment in the action at law was a bar to this suit. Its recovery concluded all matters which might have been urged as a defence to the policies. A fraudulent purpose in procuring them, subsequently carried into execution, would have been a good defence. It was in fact originally pleaded and afterwards withdrawn. Its withdrawal did not authorize a suit in another forum for its establishment against the demand of the plaintiff. When an action at law is brought upon a contract, the defendant denying its obligation, either from fraud, payment, or release, or any other matter affecting its original validity or subsequent discharge, must present his defence for consideration. A recovery is an answer to all future assertions of the invalidity of the contract by reason of any admissible matter which might have been offered to defeat the action. The contract is merged in the judgment. *Cromwell* v. *County of Sac*, 94 U. S. 351.

A suit in equity will not lie to give effect to defences against a claim when they might have been fully set up in an action at law. There must have been some fraud practised upon the court or some unconscientious advantage taken of the defendant without any fault or negligence on his part; or there must be some newly discovered evidence which could not have been obtained at the trial, and which, if produced, would have changed the result, before a court of equity will interfere with the judgment rendered or the contract upon which it was recovered. There is no pretence here that any such fraud was committed or unconscientious advantage taken, or that there is any newly discovered matter not known when the trial took

place. *Home Insurance Co.* v. *Stanchfield*, 1 Dill. 424; *Marine Insurance Co.* v. *Hodgson*, 7 Cranch, 332; *Phœnix Insurance Co.* v. *Bailey*, 13 Wall. 616.

Decree affirmed.

NATIONAL BANK *v.* INSURANCE COMPANY.

Where, upon the undisputed facts of the case, the plaintiff is not entitled to recover, the court may instruct the jury to find a verdict for the defendant.

ERROR to the Circuit Court of the United States for the Southern District of New York.

The facts are stated in the opinion of the court.

Mr. George Bliss for the plaintiff in error.

Mr. Joseph Larocque, contra.

MR. CHIEF JUSTICE WAITE delivered the opinion of the court.

The assignment of errors in this case presents the single question, whether on the undisputed facts the court below was right in directing a verdict in favor of the insurance company. The facts were as follows: —

John James Jackson was the agent at Baltimore of the Royal Insurance Company, a British corporation. His appointment was in writing and filed in the office of the insurance commissioner of Maryland, in compliance with the laws of the State. His powers were ample for the issuing of policies, the collection of premiums, and the adjustment and payment of losses. No authority was given him, however, to borrow money on the credit of the company, and he had never in a single instance done so, except by the negotiation of bills drawn by him as agent on the company to pay losses. He was at the same time the agent of other insurance companies and of a number of private persons. He was introduced to the Central National Bank of Baltimore, in 1870 or 1871, as the agent of the Royal Insurance Company, and opened an account in the name of

J. J. Jackson, agent. The name of the insurance company did not appear. All his deposits were made to the credit of this account and all his checks were drawn against it. The account was a large one and included moneys which came into his hands from all sources. As he wanted money he checked on this account, signing the checks in the name of J. J. Jackson, agent. His remittances to the company were made by bills on London purchased from Alexander Brown & Sons, dealers in foreign exchange at Baltimore, with checks on the bank payable to that firm. This was known to and understood by the bank. His checks showed that very large sums of money credited to his account as agent were used in other ways than for the benefit of the company.

In the summer of 1873 he was behind in his accounts with the company, and a special agent was sent to Baltimore to get a settlement. For the convenience of adjustment the accounts were divided into three classes, and each class examined separately. On the 9th of July, upon a statement of one part of the account as classified, a balance of $12,572.52 was found due from him to the company. He had at the time not more than five or six thousand dollars to his credit in bank, and to meet this payment asked permission of the president of the bank to overdraw his account, saying that his agents were behind in their remittances, but he would hurry them up and soon make the deficit good. Getting the consent of the bank, he made his check in favor of Alexander Brown & Sons for the amount due from him, and bought a bill on London, which was remitted the company, and afterwards paid by the drawees in the ordinary course of business.

On the 19th of July, upon the completion of the adjustment of another part of the account, a further amount was found due from Jackson to the company of $5,520.48. He then drew another check in favor of Alexander Brown & Sons for this amount, and asked again for permission to overdraw, at the same time showing the check. After a repetition of substantially the same statements he had made on the former occasion, this check was certified by the direction of the president and handed back to him. He took it to Brown & Sons and bought another bill, which was sent forward to the company and paid

in London. Before the remainder of his accounts were adjusted he left Baltimore, and his agency was revoked on the 24th or the 25th of July. The bank then called on the company to repay the overdraft, claiming that the money advanced was in fact a loan to the company. The company declined to recognize any liability, and this suit was brought to recover the balance that was due as for money loaned.

These facts are undisputed, and we think it clear, if the jury had been permitted to pass on the evidence, and had found against the company, their verdict should have been promptly set aside by the court. In point of fact the money was borrowed by Jackson to pay what he owed the company. His application was not made in the name of the company, and although his account was kept in his name as agent, it was, in reality, his individual account and not that of the company. That the money was borrowed to remit to the company must have been understood by the bank. The checks were in the form that had been used for a long time in making such remittances, and when money had been borrowed before to pay losses, it had always been done on the bills of Jackson drawn on the company in London. The form, then, which the transaction assumed, as claimed by the bank, is that of an application by a large foreign insurance company, through one of its agents in this country, for the privilege of overdrawing its bank account at the agency, so that funds might be remitted to the home office abroad a few days in advance of anticipated receipts from current business. So unusual and improbable a thing as this can hardly be presumed from the single fact that the agent of the company, who was also agent of other parties, saw fit to keep his bank account in his name as agent without indicating for whom. The natural inference, from the facts presented to the bank, certainly is, as the truth was, that the agent wanted the accommodation to enable him to meet his own obligations to the company in anticipation of the remittances of his sub-agents. Such a borrowing does not charge the company as a borrower. True, the company has saved what the bank has lost, but not in a way to make itself liable to restore what it has got. The bank trusted the agent, not the company. No other reasonable construction can be put on the acts of the parties at the

time. A borrowing by an insurance agent to enable him to remit to his company the proceeds of his business is *prima facie* the borrowing of the agent himself rather than the company, and will be so treated unless the contrary is shown. Any other rule would be dangerous in the extreme. There is here no question of ratification. This can only arise where the borrowing is by the agent for the company without authority, and the company adopts by its acts what was done by the agent. Here the borrowing was by the agent for himself and not the company. It was clearly right, therefore, for the court to tell the jury, in advance of the verdict, that upon the evidence they must find for the company. *Pleasants* v. *Fant*, 22 Wall. 116.

Judgment affirmed.

MANUFACTURING COMPANY *v.* CORBIN.

Reissued letters-patent are void, if they embrace a broader claim than that for which the original letters were issued.

APPEAL from the Circuit Court of the United States for the District of Connecticut.

The facts are stated in the opinion of the court.

Mr. Edmund Wetmore for the appellant.

Mr. Charles E. Mitchell and *Mr. O. H. Platt, contra.*

MR. JUSTICE WOODS delivered the opinion of the court.

This is a suit in equity, brought for the infringement of certain reissued letters-patent, dated Oct. 11, 1875, for an improvement in sash locks. The original letters were issued to George Voll and George McGregor as joint inventors, and the reissue was granted to their assignee, the Hopkins & Dickinson Manufacturing Company, the appellant.

In the years 1868 and 1869 George Voll was the foreman of George McGregor, a locksmith of Cincinnati, who kept a shop where he sold sash locks. Prior to February, 1868, McGregor had been selling a self-locking sash lock made by Robert Lee,

of Cincinnati, under letters granted to him dated May 30, 1865.

Sash locks are a contrivance which, by fastening the top rail of the lower sash to the bottom rail of the upper sash, prevent the opening of windows from the outside, either by lowering the upper or raising the lower sash. Their general construction and operation is as follows: A lever is pivoted upon the top rail of the lower sash. When the lock is open the direction of this lever is the same as the rail of the sash. To fasten the sashes it is necessary to turn this lever on its pivot to a position across and at right angles to the division line between the impinging rails of the two sashes, when it engages with a catch on the bottom rail of the upper sash. This catch, if, as has generally been the case, it consists of a simple hook, under the projection of which one end of the lever remains when in the locking position, is sufficient to prevent the opening of the window by any direct pressure on the sashes exerted in the ordinary way to open a window, but there would be nothing to prevent the pushing aside of the locking lever by inserting from the outside, between the impinging rails of the sashes, a knife-blade, paper-cutter, or other similar instrument, and thus opening the lock. To prevent this, various devices have been used to hold the locking lever fast when in the locking position, so that it could not be moved sideways from the outside, but only from the inside, by disengaging it from the catch in the ordinary process of unlocking.

This object was accomplished in the sash lock of Lee, by giving the lever a certain amount of play on its pivot, so that when it was turned to the locking position its end not only passed under the catch, but also behind a lip in the catch, thereby forming, with the latter, a latch which prevented any lateral movement of the lever. This was, therefore, called a self-locking sash lock. As in most sash locks, the pivoted locking lever was secured to a bed plate fastened upon the top of the upper rail of the lower and inner sash. This plate was designated the base plate. The catch was attached to a similar plate on the bottom rail of the upper sash, which was called the striking plate.

McGregor was unable to furnish the Lee sash lock to fill a

large order which he had received, and mentioned the fact to Voll, who in a short time produced the model of a self-locking sash lock. In this lock the locking lever was pivoted on a cylindrical stump upon the base plate, the base plate being fastened upon the upper rail of the lower sash. There was a round hole in that part of the cylindrical stump nearest the inner edge of the sash rail, fitted to receive a small cylindrical pin or bolt. That part of the locking lever, which, when it was in the locking position, was over the rail of the inner sash, had a longitudinal hole extending through it to the pivotal stump. Through this hole a cylindrical pin extended from the outer end of the lever to the stump, and was pressed by a spiral spring against the stump. When the locking lever was turned around into the locking position, the end of the pin, by the action of the spring, entered the hole by a horizontal motion, and thus the lever was prevented from turning sidewise. When it was desired to unlock the lock, the pin, which projected beyond the end of the locking lever and ended in a knob, was pulled back out of the hole, and the lever was turned sideways into its unlocked position.

This sash lock was made about February, 1868, and on the 24th of that month Voll applied for letters for his invention, describing it as an improvement in sash locks, the object of which was to prevent the lock from being unfastened from the outside by inserting a knife or other thin instrument between the sashes, and pushing aside the locking lever. The claim was thus set forth in his specification: "Having thus fully described and set forth the nature of my invention, what I desire to secure by letters is: The pin F, operating in hole in stump A, preventing the fastener from being turned, as described and set forth."

This application was refused because the invention had been anticipated by letters-patent issued to Brockseller & Sargent, May 11, 1858. Reference was also made by the examiner in his refusal to the letters of Robert Lee, dated May 30, 1865. This application was reheard and again rejected. The rejection was acquiesced in by Voll, who long after his application, and before its final rejection, made a small lot of silver-plated sash locks according to his plan, which were sent in full working order to McGregor's shop for sale.

After this rejection Voll made another sash lock, omitting the hole and pin features, and using a pivoted piece at the outer end of the lever which worked vertically by a flat spring, locking the lever as before by an engagement on the base plate. With the view of having letters applied for, he sent a working model of this contrivance to Munn & Co., of New York, who informed him that it was not patentable.

Thereupon Voll and McGregor made the improvement in sash locks for which letters were issued to them dated March 30, 1869.

The original specification described by letter references the separate parts of the sash bolt, and their operation, and the claim was stated as follows: "In a sash bolt the arrangement and combination of the base plate C with the segment c thereon, cam D, spring-bolt F, arm G, and catch H, as shown and described for the purpose specified."

On July 1, 1870, Voll and McGregor sold these letters and the invention thereby secured to the appellant, who, Aug. 6, 1875, applied for a reissue of them. It was granted, Oct. 11, 1875, as prayed for.

In the application for a reissue the claim was thus stated: "A vibrating lever provided with a bolt, in combination with a striking plate or hook, and with a catch-segment behind which the bolt can pass, formed upon the plate upon which the lever is pivoted, the whole constituting a sash fastener, and the parts enumerated in the claim being and operating substantially as specified."

The essential distinction between the original invention of Voll, for which letters were refused, and that covered by the reissue to the appellant, is this: In the contrivance first named the locking lever when in locked position was held fast in its place by a bolt which was driven by a spiral spring into a hole in the stump on which the lever was pivoted. In the contrivance covered by the letters to Voll and McGregor the bolt which holds the locking lever in its place, instead of entering a hole in the post, is forced by the spiral spring past the end of a segment raised upon a base plate, which prevents a sidewise movement of the locking lever until the bolt is retracted.

The sash lock manufactured by appellees, which appellant alleged was an infringement of its reissued letters, had placed on the end of the locking lever a pivoted latch provided with a downward projection, which, when the locking lever was placed in a locking position, entered a hole or socket in the base plate.

The court below dismissed the bill. Its decree is brought here for review.

The defence insisted on is that if the claim of the appellant's reissued letters be construed to cover the appellees' sash locks, it is void, because it embraces the previous invention made by Voll alone, which had been abandoned to the public after it had been rejected by the Patent Office, and which was not the invention of Voll and McGregor jointly, and that if the reissue is so construed as to cover the sash locks made by the appellees, it is for a different invention from that which the original letters to Voll and McGregor covered.

We think this defence is sustained by the evidence.

It is perfectly clear that the sash lock manufactured by the appellees was as much an infringement of the device invented by Voll for which a patent was refused as it was of the reissued letters of the appellant. In both Voll's contrivance and the patented device of Voll and McGregor which the appellant claims, the catch to prevent the sidewise motion of the locking lever was on the base plate and not on the striking plate, and in Voll's invention the catch consisted of a bolt driven by a spiral spring into a hole, and in Voll and McGregor's invention the bolt was driven by a similar spring past the end of a segment raised on the base plate.

A pivoted latch on the end of the locking lever with a downward projection entering a socket in the base plate to prevent a lateral movement of the locking lever does not appear to us to be the equivalent of either the contrivance of Voll or of Voll and McGregor. The difference between them is as clear and distinct as the difference between a door latch and a door bolt.

But if the sash lock of the appellees is held to infringe the Voll and McGregor patent, it beyond question or controversy includes the separate device of Voll for which he made appli-

cation for letters-patent. The only ground upon which the appellees' sash lock can be held to embody any part of the device of either, is that the catch to prevent the sidewise motion of the locking lever is on the base plate and not on the striking plate. But this was the important part of Voll's separate invention, and he was refused letters for it, and abandoned his application therefor. He made locks according to his device, and put them on sale.

Construed in the light of the fact that the application of Voll for letters-patent for his device was refused, the invention of Voll and McGregor is reduced to very narrow limits. Their improvement would consist solely in the fact that the bolt in the locking lever, instead of being driven by the spiral spring into a hole in the post upon which the lever is pivoted, is driven past the end of a segment raised on the base plate. So construed, it is perfectly plain that there is no infringement.

Conclusive evidence to establish the defence is found in the amendments made by the appellant in its application for reissue. If the reissue had been granted as applied for, it might with some plausibility have been claimed that the reissued letters were infringed by the sash locks made by the appellees. But the application in its original form was not granted. The specification for the reissue was amended by striking out, wherever they occurred, the words "socket or depression in the base plate," and substituting the words "catch segment or segment."

This shows beyond controversy that in asking for a reissue the appellant sought to make its letters cover sash locks like those made by the appellees, but was not able to do so, and the reissue was restricted to a sash lock in which the locking lever was made fast by a bolt driven past the end of a segment raised on the base plate.

These conclusions warrant the inference that if the reissued letters are to be construed as the appellant insists they should be, and as they must be, to include the sash locks of the appellees, they are broader than the original letters, and therefore void. *The Wood Paper Patent*, 23 Wall. 566; *Russell* v. *Dodge*, 93 U. S. 460; *Powder Company* v. *Powder Works*, 98 id. 126;

Ball v. *Langles*, 102 id. 128; *Manufacturing Company* v. *Ladd*, id. 408; *Wicks* v. *Stevens*, 2 Woods, 312.

We are of opinion that the decree of the Circuit Court dismissing the appellants' bill was right. It is, therefore,

Affirmed.

COOK *v.* LILLO.

1. *Thorington* v. *Smith* (8 Wall. 1) cited and approved.
2. Payment of a promissory note, executed at New Orleans March 26, 1862, will be enforced in lawful money where payments on account of the principal and interest were in that medium, and where, before the commencement of the suit, no claim was made that, by the agreement or understanding of the parties, the term "dollars" was to be construed as meaning "Confederate dollars."
3. In Louisiana, usurious interest cannot be reclaimed, nor imputed to the principal, unless a suit for its recovery be commenced or a plea of usury be set up within twelve months after the payment thereof.

APPEAL from the Circuit Court of the United States for the District of Louisiana.

The facts are stated in the opinion of the court.

Mr. Charles B. Singleton, *Mr. Richard H. Browne*, and *Mr. John A. Campbell* for the appellant.

Mr. C. E. Schmidt and *Mr. Thomas J. Semmes*, *contra.*

MR. CHIEF JUSTICE WAITE delivered the opinion of the court.

It has long been settled in this court that transactions in Confederate money during the late civil war between the inhabitants of the Confederate States within the Confederate lines, not intended to promote the ends of the Confederate government, could be enforced in the courts of the United States, after the restoration of peace, to the extent of their just obligation. It is equally well settled that if a contract entered into under such circumstances, payable in dollars, was, according to the understanding of the parties, to be paid in Confederate dollars, upon proof of that fact the party entitled to the payment

can only recover the value of Confederate dollars in the lawful money of the United States. *Thorington* v. *Smith*, 8 Wall. 1.

The loan for which the notes sued on in this case were given was made by a check on one of the New Orleans banks. The business of the banks was at that time done in Confederate currency. That kind of money was received and paid out in ordinary transactions, but the evidence fails entirely to satisfy us that the dollars called for in the notes were, by the agreement or understanding of the parties, Confederate dollars. Cook owed a debt of $10,000, payable in lawful money of the United States, and bearing interest at the rate of ten per cent per annum. He borrowed of the Sonlies $10,000 at a reduced rate of interest to pay that debt. It is fair to presume from the evidence that the dollars he borrowed paid the dollars he owed. He says himself his only object in the transaction was to carry his debt at less interest. It is nowhere intimated that the dollars he expected to pay on his loan were other or different from those he owed on his old debt. Not long after the notes were given, New Orleans was taken possession of by the military forces of the United States, and was never afterwards within the Confederate lines. Payments to a large amount both of principal and interest have been made, and always in lawful money or its equivalent. So far as we can discover from the evidence, no claim was ever made that the notes called for Confederate dollars until about the time of the commencement of this suit, which was fifteen years after the notes were given, and after thousands of dollars had been paid and many extensions of time secured. The court below was clearly right, therefore, in rendering a decree without any deduction for the depreciated value of Confederate dollars.

It is not denied that Lillo, the complainant below, was an alien when the suit was begun. He could, therefore, sue in the courts of the United States. He is the holder of the notes sued on, and there is nothing in the evidence to show that he has not the right to maintain this action. The notes in his hands are subject to the same defences they would be in the hands of the Sonlies, because, confessedly, they were transferred to him long after they had become due.

By a statute of Louisiana, if a person pays on a contract a

higher rate of interest than eight per cent, it may be sued for and recovered back within twelve months from the time of the payment. Rev. Stat. 1870, sect. 1855. Before this statute, which was first enacted in 1844, it had been decided by the highest court of the State in several cases that money paid for usurious interest could not be reclaimed or imputed to the capital. *Perillat* v. *Puech*, 2 Mart. (La.) N. S. 672; *Millaudon* v. *Arnous*, 3 id. 596; *Poydras* v. *Turgeau*, 14 id. 37; *Merchants' Bank* v. *Gove*, 15 id. 378; *Cox* v. *Rowley*, 12 Rob. (La.) 273. Since the statute it has been held that a reclamation cannot be made, or the usurious interest imputed to the principal, unless the suit for the recovery is begun, or plea of usury set up to the claim within twelve months after the payment is made. *Cox* v. *McIntyre*, 6 La. Ann. 470; *Weaver* v. *Maillot*, 15 id. 395. In view of these decisions the appellant was not entitled to any credit on the principal of his debt by reason of usurious interest paid, because his last payment of interest was made in March, 1875, and this suit was not begun until Jan. 11, 1877, more than twelve months afterwards.

This disposes of all the errors assigned.

Decree affirmed.

EX PARTE RAILWAY COMPANY.

1. The judgment of the Circuit Court, on a plea to the jurisdiction, will not be reviewed here upon a petition for a *mandamus*.
2. An attachment cannot be sued out of that court against the property of the defendant in an action where the court has not acquired jurisdiction of the person.
3. This ruling is applicable to the Circuit Court of the United States sitting in Iowa, notwithstanding the act of June 4, 1880, c. 120. 21 Stat. 155.

ORIGINAL.

Mr. Fillmore Beall presented the petition of the Des Moines and Minneapolis Railroad Company, duly verified by affidavit, and moved for a rule on the Circuit Court of the United States for the District of Iowa, Northern Division, to show cause why a writ of *mandamus* should not issue. The petition sets forth

that the company, a corporation existing under the laws of Iowa, brought suit in that court Sept. 3, 1880, against John B. Alley, a citizen of Massachusetts, to recover the sum of $99,616.05, and in the complaint asked, in conformity with the practice and pleading existing in the courts of Iowa, for an attachment against his property on the ground that he was a non-resident of the State of Iowa; that upon filing the complaint duly sworn to, and the requisite bond with security, as required by the code of Iowa, the clerk of the court issued in the suit, in usual form, the ordinary summons in a civil action, and also a writ of attachment against the property of said Alley, directed to the marshal of the district, commanding him to attach the lands and tenements, goods and chattels, rights and credits, of said Alley (except such as is exempt from execution) wherever the same might be found in said district, or so much thereof as might be necessary to satisfy said sum; that said writs were delivered to the marshal for service, who thereupon made return upon said writ of attachment that the same came into his hands on the third day of September, 1880, and that he served the same on the fourth day of September, 1880, at 8 o'clock A. M., by levying upon certain shares of stock in certain named railroad corporations and in a corporation owning certain lands, the property of said Alley within said district; and he returned the said summons "not served, the within-named John B. Alley not being found in my district."

The petition further sets forth that the company thereupon filed an affidavit in the suit showing that personal service could not be made on said Alley within the said district (State) of Iowa; that the action was brought against a non-resident of the (State) district of Iowa, and that he had property in the State sought to be taken by attachment, and asking an order of service by publication, or an order for personal service upon the defendant, either within or without the (State) district; that afterwards said motion for such order coming on for hearing, said Alley entering a special plea to the jurisdiction, the *gravamen* thereof being that he was not an inhabitant of said district, and had not been found therein, moved a dismissal of the suit, and for an order dissolving the attachment; that the court sustained the plea, and adjudged that the suit be dismissed, and

the attachment dissolved; to which action of the court the company duly excepted, and gave notice of this proceeding to review the same.

The motion was for a rule to show cause why a peremptory *mandamus* should not issue to the Circuit Court commanding it to set aside its orders dismissing the suit and dissolving the attachment, to restore the cause to its place on the docket, to grant the order of service asked for, and to proceed to hear the cause further, and upon such issues as may be framed therein.

MR. CHIEF JUSTICE WAITE delivered the opinion of the court.

This motion is denied, 1, because it is an attempt to use the writ of *mandamus* as a writ of error to bring here for review the judgment of the Circuit Court upon a plea to the jurisdiction filed in the suit; and, 2, because if a writ of *mandamus* could be used for such a purpose the judgment below was clearly right. Under sect. 739 of the Revised Statutes, no civil suit, not local in its nature, can be brought in the Circuit Court of the United States, against an inhabitant of the United States, by original process, in any other State than that of which he is an inhabitant, or in which he is found at the time of serving the writ. It is conceded that the person against whom this suit was brought in the Circuit Court was an inhabitant of the State of Massachusetts, and was not found in or served with process in Iowa. Clearly, then, he was not suable in the Circuit Court of the District of Iowa, and unless he could be sued no attachment could issue from that court against his property. An attachment is but an incident to a suit, and unless the suit can be maintained the attachment must fall. The act of June 4, 1880, c. 120, "providing the times and places of holding the Circuit Court of the United States in the District of Iowa and for other purposes" (21 Stat. 155), divides that district into four divisions, and requires suits against an inhabitant of the district to be brought in the division in which he resides. The provision of the second section, that, "where the defendant is not a resident of the district, suit may be brought in any division where property or the defendant is found," applies only to suits which may be

properly brought in the district against a non-resident. Such a suit, if not local, must be in the division where the defendant is found when served with process; if local, in the division where the property, which is the subject-matter of the action, is situated. There is not manifested anywhere in this act an intention of repealing sect. 739, so far as it affects the Iowa district.

Motion denied.

CROUCH v. ROEMER.

1. Reissued letters-patent No. 4289, granted March 7, 1871, to George Crouch, for an improvement in straps for shawls, are void, by reason of the prior knowledge and public use of the invention which they describe.
2. The substitution of a known equivalent for one of the elements of a former structure is not patentable.

APPEAL from the Circuit Court of the United States for the District of New Jersey.

This is a suit in equity by George Crouch against William Roemer to prevent the infringement by the latter of reissued letters-patent No. 4289, granted March 7, 1871, to the complainant for an improvement in straps for shawls.

Among the defences set up by the respondent was the want of novelty and the prior public use of the invention described in the letters. The remaining facts are stated in the opinion of the court.

The court below sustained the defence and dismissed the bill. Crouch thereupon appealed.

Mr. E. B. Barnum for the appellant.
Mr. Arthur v. Briesen, contra.

MR. CHIEF JUSTICE WAITE delivered the opinion of the court.

The appellant in this case, complainant below, in describing his invention, when he applied for his patent, said that before his invention "straps had been used to confine a shawl, or similar article, in a bundle, and a leather cross-piece, with loops at the ends, had extended from one strap to the other; and above,

and attached to this leather cross-piece, was a handle." He then said: "My invention consists of a rigid cross-bar beneath the handle, combined with straps that are passed around the shawl or bundle, such straps passing through loops at the ends of the handle." This was because the "leather cross-piece or connecting strap" was "liable to bend and allow the straps to be drawn toward each other by the handle in sustaining the weight; . . . hence the handle is inconvenient to grasp." From this, as it seems to us, the *rigid* cross-bar was, from the beginning, the controlling idea of the inventor. His object clearly was, not to bind and hold the bundle, but to keep the handle which the holder was to grasp from pressing the sides of the hand. Hence he says: "I claim as my invention— 1. The rigid cross-bar, connecting the ends of the handle, and provided with loops for the straps, substantially as and for the purposes set forth;" that is to say, to bind and hold a bundle to be carried. The drawings which accompany this application show that the inventor had in his mind straps which were to pass over the rigid bar crosswise, but there is nothing to indicate that they might not pass over the ends or through openings in the bar itself. Next he claims, "loops made of the leather of the handle, and secured to the rigid cross-bar," and then, "the rigid cross-bar for a shawl-strap made of sheet metal, corrugated and covered with leather."

Clearly the defendant could not have infringed any other than the first claim. He did have a rigid cross-bar connecting the ends of a handle provided with openings, which were undoubtedly the equivalent of loops through which the straps to hold the bundle could pass; but he had no loops made of the leather of the handles, and no cross-bar made of sheet-metal corrugated and covered with leather. Our inquiries are, therefore, confined to the validity of the first claim in the complainant's patent.

It is conceded in the patent itself that shawl-straps with handles attached to a leather cross-piece having loops at the ends were old. Eustace, one of the witnesses for the complainant, says he made his goods with a cross-piece of the firmest leather he could get, doubled and stitched, so as to render it firmer still. His object clearly was to keep the weight of

the bundle from drawing the ends of the handle together so as to press against the sides of the hand.

The testimony leaves no doubt on our minds that handles fastened on rigid cross-bars and used to carry bundles were known long before the complainant's invention. Possibly in adjusting them to use, though this is by no means certain, the straps to bind the bundle were not passed through loops across the bar, yet it is clear, beyond all question, that the handle, rigid cross-bar, loops, or their equivalent, and straps, or equivalents, were used in combination to keep together and carry one or more articles in a package made by piling or rolling the articles together. Under these circumstances it was no invention to stiffen by artificial means the leather cross-piece which had before been made as rigid as it could be by thickness, doubling, and stitching. All that was done by this inventor was to add to the degree of rigidity which had been used before. The addition of metal or other substance as a stiffener of the known cross-piece, which had already been made rigid in a degree, was not invention. The substantial elements of a well-known structure were thus, in no patentable way, changed.

This view of the case makes it unnecessary to follow counsel in their efforts to break down or sustain the testimony of individual witnesses. The thing which the complainant claims to have patented was substantially made and used long before his invention. All he did was, by the use of known equivalents for some of the elements of former structures, to make it somewhat better than it was ever made before. This is not patentable.

Decree affirmed.

JOHNSTON v. LAFLIN.

1. The title to shares of the capital stock of a national bank passes when the owner delivers his stock certificate to the purchaser, with authority to him or any one whom he may name to transfer them on the books of the bank.
2. In good faith, and without intent to evade his responsibility as a stockholder, A., the owner of such shares, sold them to a broker, to whom he delivered his stock certificate and a power to transfer them, leaving blanks for the names of the attorney and transferee. The broker sold them to B., the president of the bank, who gave his individual check in payment therefor, and received the certificate and power. By the directions of B., a book-keeper of the bank inserted his own name as attorney, and transferred the stock to B. as "trustee" on the official stock register. The entries in the stock ledger and other books of the bank show that B. purchased the stock for it, and reimbursed himself with its funds. The book-keeper had actual knowledge of all the facts. In a suit brought by the receiver of the bank, to compel B. to retransfer the shares, and A. to repay the price therefor, and to have the latter declared a stockholder in regard to them, — *Held*, that as the book-keeper was the agent of the bank, his knowledge of the transaction could not be imputed to A., and that the suit could not be maintained.

APPEAL from the Circuit Court of the United States for the Eastern District of Missouri.

The facts are stated in the opinion of the court.

Mr. John B. Henderson and *Mr. George H. Shields* for the appellant.

Mr. A. W. Slayback, contra.

MR. JUSTICE FIELD delivered the opinion of the court.

The questions raised in this case are important to owners of shares in the national banks, but they are not difficult of solution. The delay in their decision has been caused by the great pressure of business upon the court, and not from any doubt as to their proper disposition. The appellant, the complainant below, is the receiver of the National Bank of the State of Missouri, appointed by the comptroller of the currency on the 27th of June, 1877. The bank failed on the 20th of that month. The defendant, James H. Britton, was its president, and had been so for some years. On the 16th of May, 1877, and for some time previously, the defendant Laflin was a stockholder

of the bank, owning eighty-five shares of full-paid stock. He was not a director of the bank, nor had he any personal knowledge of its actual financial condition. It is to be presumed that he regarded that condition as sound, for up to the time of the failure he continued to deposit funds with it for a company of which he was a resident director at St. Louis. On the day mentioned, May 16, 1877, he sold his eighty-five shares to a broker, to whom he delivered his certificate of the stock, with a blank power of attorney indorsed thereon, authorizing the attorney, whose name might be subsequently inserted by the broker, or any other party becoming the owner of the certificate, to transfer it on the books of the bank in such form and manner as might be necessary or required by its regulations. Laflin did not at the time know for whom the stock was bought; information on the subject was withheld from him. He received for the price agreed the broker's check on a banking-house in St. Louis, which was paid the same day on presentation. The broker was, however, in fact acting for Britton, the president of the bank, who represented that he was purchasing for himself or for a party whose name he did not disclose. There was no intimation that he was making the purchase for the bank or in its interest. He gave the broker his individual check on the bank for the price of the stock, which was paid on presentation. Subsequently, but on the same day, he received the certificate, and thereupon directed a book-keeper in the bank, named Geralt, to fill up the power of attorney with his, the book-keeper's, name, and to transfer the certificate to his, Britton's, name, as trustee on the transfer book or stock register of the bank, which was accordingly done. He had at the time, to his individual credit at the bank, several hundred dollars more than sufficient to meet his check. He had for years dealt largely on his own account in its stock, and there was nothing in the transaction between the broker and himself to awaken suspicion as to its legality or propriety. Some days afterwards, on the 29th of the same month, at an election of directors, he represented and voted on the stock purchased.

It appears, however, that whilst the shares stood on the official stock register in the name of Britton as trustee, without

stating for whom he was trustee, the transaction was entered on the stock ledger in an account with him as "trustee of the bank." And by his directions the book-keeper credited his individual account with the amount of the check given for the shares, and charged the same amount to the "sundry stock account." In other words, the entries on the books - - other than the official stock register — showed that the stock was purchased by Britton for the benefit of the bank and paid for with its funds. But neither Laflin nor the broker had any notice of the manner in which the transfer was made, or of the entries on the books of the bank, or that the purchase had been made with its funds. The book-keeper, Geralt, who made the transfer and the entries, had, however, actual knowledge of the facts.

The present suit is brought by the receiver of the bank to set aside the purchase of the eighty-five shares, to compel Laflin to repay the money received and Britton to retransfer to him the shares on the books of the bank, and to have him declared to be still a stockholder in respect of those shares.

The statute declares that the capital stock of every national banking association shall be divided into shares of one hundred dollars each, and be transferable on its books in such manner as may be prescribed by its by-laws or articles, and that every person becoming a stockholder, by such transfer, shall, in proportion to his shares, succeed to all the rights and liabilities of the prior holder. There was no by-law of the association here regulating transfers of its shares, but each certificate of stock contained this provision: "Transferable only on the books of the said bank, in person or by attorney, on the return of this certificate, and in conformity with the provisions of the laws of Congress and the by-laws which may be in force at the time of such transfer."

The statute also declares that no association shall be the purchaser of any shares of its own capital stock, unless the purchase be necessary to prevent a loss upon a debt previously contracted. The purchase by the bank, through its president, in the present case was not made to prevent such a loss. Laflin was not indebted to the bank at the time he sold his

shares. The receiver, therefore, starting with the conceded fact that the purchase by the bank was prohibited, and therefore illegal on its part, seeks to charge Laflin with the consequences of such illegality, as though he had dealt directly with the bank, or had known at the time that the purchase was made for it. He assumes such knowledge by Laflin because the party with whose name the blank power of attorney was filled, to make the transfer of the certificate of stock, was cognizant of the facts. His argument is substantially this: The transfer of the stock is not complete until made on the books of the bank, and the attorney who made it knew that the purchase was by the bank and with its funds, and his knowledge was the knowledge of Laflin.

The general doctrine that the principal in a transaction is chargeable with notice of matters affecting its validity, coming to the knowledge of his agent pending the proceeding, is not questioned. Had Geralt, the book-keeper, been appointed by Laflin to make the sale, and had he in negotiating it learned the facts as to the purchase and use of the funds of the bank, there would be ground to invoke the application of the doctrine. But such was not the position of Geralt to Laflin. The sale was consummated, so far as Laflin was concerned, when he delivered the certificate, with the power to transfer it, to the broker. The latter did not mention the name of the principal for whom he was acting. He declined to give it. Laflin had a right, therefore, to treat him as the principal, and if he was competent to make the purchase the sale was valid. Shares in the capital stock of associations, under the national banking law, are salable and transferable at the will of the owner. They are, in that respect, like other personal property. The statute recognizes this transferability, although it authorizes every association to prescribe the manner of their transfer. Its power in that respect, however, can only go to the extent of prescribing conditions essential to the protection of the association against fraudulent transfers, or such as may be designed to evade the just responsibility of the stockholder. It is to be exercised reasonably. Under the pretence of prescribing the manner of the transfer, the association cannot clog the transfer with useless restrictions, or make it dependent

upon the consent of the directors or other stockholders. It is not necessary, however, to consider what restrictions would be within its power, for it had imposed none. As between Laflin and the broker, the transaction was consummated when the certificate was delivered to the latter, with the blank power of attorney indorsed, and the money was received from him. As between them, the title to the shares then passed; whether that be deemed a legal or equitable one matters not; the right to the shares then vested in the purchaser. The entry of the transaction on the books of the bank, where stock is sold, is required, not for the translation of the title, but for the protection of the parties and others dealing with the bank, and to enable it to know who are its stockholders, entitled to vote at their meetings and receive dividends when declared. It is necessary to protect the seller against subsequent liability as a stockholder, and perhaps also to protect the purchaser against proceedings of the seller's creditors. Purchasers and creditors, in the absence of other knowledge, are only bound to look to the books of registry of the bank. But as between the parties to a sale, it is enough that the certificate is delivered with authority to the purchaser, or any one he may name, to transfer it on the books of the company, and the price is paid. If a subsequent transfer of the certificate be refused by the bank, it can be compelled at the instance of either of them. *Bank* v. *Lanier*, 11 Wall. 369; *Webster* v. *Upton*, 91 U. S. 65; *Bank of Utica* v. *Smalley*, 2 Cow. (N. Y.) 770; *Gilbert* v. *Manchester Iron Co.*, 11 Wend. (N. Y.) 627; *Commercial Bank of Buffalo* v. *Kortright*, 22 id. 348; *Sargeant* v. *Franklin Insurance Co.*, 8 Pick. (Mass.) 90.

The transferability of shares in the national banks is not governed by different rules from those which are ordinarily applied to the transfer of shares in other corporate bodies. The power of attorney indorsed on the certificate is usually written or printed, with a space in blank for the name of the attorney to be inserted, for the accommodation of the purchaser. The subsequent filling up of the blank by him with another name, instead of his own, as it may suit his convenience, does not so connect the vendor with the party named as to charge him with the latter's knowledge and thus affect

the previous transaction. A different doctrine would put a speedy end to the signing of powers of attorney in blank. And instruments of that kind are of great convenience in the sale of shares of incorporated companies, and are in constant use. The name with which the blank may be subsequently filled up by the purchaser is not, in practice, regarded as affecting the previous sale in any respect, but as a matter which concerns only the purchaser. It would be a source of disturbance in business if any other result were attached by the law to the proceeding.

The further position of the receiver, that the assets of the bank constituted a trust fund for the benefit of its creditors, and, where wrongfully diverted, can be followed in whosesoever hands they can be traced, may, as the statement of a general doctrine, be admitted. But it has no application to the case at bar. Here no assets of the bank were received by Laflin. What he received came from the broker, the only person with whom he dealt or whom he knew as principal in the negotiation. The circumstance that the purchase was actually in the interest of the bank — though of that fact the broker was ignorant — cannot affect the latter's character as principal, so far as Laflin was concerned, which he bore in the negotiation.

The whole transaction, on the part of Laflin, was free from any imputation of fraud. He sold his shares to a person competent to purchase and hold them, and received the stipulated price. It would be a perversion of justice and of the ordinary rules governing men in commercial transactions to hold the sale, under such circumstances, vitiated by the relations of the purchaser to others, of which the seller had no knowledge, or any grounds to entertain a suspicion. The validity of the sale of stock cannot be made to depend upon the accident of the immediate purchaser, or of the party to whom he may transfer the certificate, in filling up the blank in the power of attorney with the name of a person, to make the formal transfer, who is acquainted with the secret interests of others in the shares purchased. The validity of a sale and its completeness must be determined by the relation which the contracting parties at the time openly bear to each other.

Of course the whole case here would be changed if the sale by Laflin had not been made in good faith, but was made merely to evade his just responsibility as a stockholder, or to work a fraud upon other stockholders or creditors of the bank.

Decree affirmed.

THOMPSON v. PERRINE.

1. A town in New York was authorized, upon certain conditions, to subscribe for railway stock, and sell its bonds at not less than their par value to raise funds wherewith to pay therefor. The subscription was made; but the commissioners issued to the company, in exchange for its stock, bonds in which that fact is recited. Such an exchange was not authorized by the statute, and, under the decisions of the courts of that State, a holder of the bonds, who had notice that they had been so exchanged, could not enforce the payment of them. After the passage of the act of April 28, 1871 (*infra*, p. 809), A. purchased them for value, and brought suit upon certain coupons detached therefrom. *Held*, that the legislature had the constitutional power to pass the act, and that the bonds were thereby validated.
2. The court declines to follow *Horton* v. *Town of Thompson* (71 N. Y. 513), in which the same point is involved.
3. *County of Warren* v. *Marcy* (97 U. S. 96) affirmed.

ERROR to the Circuit Court of the United States for the Southern District of New York.

This action was commenced on the first day of May, 1876, by Perrine, against the town of Thompson, a municipal corporation in Sullivan County, New York, for the amount of coupons attached to certain bonds, signed by G. M. Benedict, N. S. Hamilton, and W. H. Cady, county commissioners, and issued by them in the name of the town under date of May 1, 1869. They were purchased by him of Gulick & Van Kleeck, July 20, 1875, he paying cash therefor. Each bond is payable to bearer on the 1st of March, 1899. It recites that it "is a valid security, being issued by virtue of an act entitled 'An Act to authorize certain towns in the counties of Sullivan and Orange to issue bonds and take stock in any company now organized, or that may hereafter be organized within three years after the passage of this act, for the purpose of building

a railroad from the village of Monticello in the county of Sullivan through the towns of Thompson and Forestburgh in said county, and the town of Deerpark in the county of Orange, to Port Jervis, Orange County,' passed May 4, 1868, and of the act amendatory thereof, passed April 1, 1869." And that the promise to pay that sum is "by virtue and in pursuance of the acts above entitled and referred to, and for value received in the stock of the Monticello and Port Jervis Railway Company."

Those acts authorized the commissioners who might be appointed, in the mode therein prescribed, on behalf of any town along the route of the proposed road from Monticello to Port Jervis, to borrow, on its credit, such sums of money, not exceeding thirty-three per cent of the valuation of the town, to be ascertained by its assessment rolls for 1867, for a term not exceeding thirty years, at not exceeding seven per cent interest per annum, and "to execute bonds therefor under their hands and seals," — such debt not, however, to be contracted, and such bonds not to be issued, until there was obtained the written consent of the majority of the taxpayers, appearing upon the last assessment roll, as shall represent a majority of the taxable property, not including lands owned by non-residents; nor until a certain amount of the capital stock of the company had been subscribed in good faith, and paid, by individuals or corporations. The statute required the fact that the persons so consenting represented the proper number of taxpayers, should be supported by the affidavit of one of the town assessors or the town clerk, — the consent and the affidavit to be filed in the offices of the county and town clerks respectively, a certified copy whereof "shall be evidence of the facts therein contained and certified in any court of this [that] State, and before any judge or justice thereof."

The third section of the original act provided that the commissioners thereby authorized "may, in their discretion, dispose of such bonds, or any part thereof, to such persons or corporations, and upon such terms, as they shall deem most advantageous for their said town, but not for less than par; and the money that shall be received by any loan or sale of such bonds shall be invested in the stock of such company, now organized,

or that may hereafter be organized, within two years after the passage of this act, for the purpose of building or aiding in the building of a railroad," from Monticello to Port Jervis.

The entire issue of bonds under the acts referred to was $148,000, of which $15,000 were delivered to the company on the 4th of May, 1869, and $133,000 on the 12th of May, 1869.

Prior to the delivery of the bonds to the railroad company it had made a construction contract with Crowley and Colts, by which the latter were to be paid partly in bonds of towns along the line of the road. In September, 1869, Gulick & Van Kleeck purchased, for cash, eight of the bonds from the National Bank of Port Jervis, at ninety cents on the dollar. In November of the same year, the Atlantic Savings Bank of the City of New York (subsequently known as the Bond Street Savings Bank) purchased $50,000 of the bonds, at eighty-two and one-half cents on the dollar and accrued interest, for cash, and from that institution Gulick & Van Kleeck purchased eighteen of the bonds, Feb. 19, 1875, at seventy-five cents on the dollar. The town, by means of taxation in conformity with the provisions of the original and amendatory acts, met the instalments of interest due March 1, 1870, and Sept. 1, 1870. The road was completed in January, 1871, and has been in operation ever since.

Such was the condition of the enterprise, and such were the relations which the town held to the holders of its bonds, when, on the 28th of April, 1871, the legislature of New York passed an act entitled "An Act to legalize and confirm the acts of the commissioners of the towns of Thompson and Forestburgh, in the county of Sullivan, and of Deerpark, in the county of Orange, in issuing and disposing of the bonds of their respective towns, to build a railroad from the village of Monticello, in the county of Sullivan, to the village of Port Jervis, in the county of Orange, under chapter five hundred and fifty-three of the laws of eighteen hundred and sixty-eight, and to legalize and confirm all bonds heretofore issued by such commissioners under said chapter of laws, now held by or owned by *bona fide* purchasers."

As the facts were undisputed, the court directed a verdict for Perrine, and the town sued out this writ.

Since the present case largely depends upon the construction and effect of the act of April 28, 1871, it is here given in full:—

"SECT. 1. The acts of Nathan S. Hamilton, Giles M. Benedict, and William H. Cady, commissioners on the part of the town of Thompson, and Silas T. L. Norris, Edwin Hartwell, and James Ketcham, commissioners of the town of Forestburgh, in the county of Sullivan, and of Orville J. Brown, Samuel O. Dimmick, and Augustus B. Goodale, commissioners of the town of Deerpark, in the county of Orange, appointed in pursuance of an act entitled 'An Act to authorize certain towns in the counties of Sullivan and Orange to issue bonds and take stock in any company now organized or that may hereafter be organized, within three years after the passage of this act, for the purpose of building a railroad from the village of Monticello, in the county of Sullivan, through the towns of Thompson and Forestburgh, in said county of Sullivan, and the town of Deerpark, in the county of Orange, to Port Jervis,' passed May fourth, eighteen hundred and sixty-eight, in issuing bonds upon the faith and credit of their respective towns, and in exchanging them for the stock of the company, organized for the purpose of constructing the railroad, contemplated by said act, are hereby ratified and confirmed.

"SECT. 2. No bond or bonds issued or purporting to have been issued under the said act, and now held, owned, or possessed by any person or persons, guardian, trustee, or corporation, in good faith or for a valuable consideration, shall be void or voidable by reason of any defect or omission in the consents in writing, of the taxpayers of the said towns of Thompson, Forestburgh, and Deerpark, upon which such bonds were or purport to have been issued in or by reason of said consents, not stating the name of the railroad company in which the taxpayers so signing such consents desired the bonds or the money arising from the sale thereof to be invested. But that the said bonds shall be as valid and effectual for every purpose, as if such defect or omission had not occurred: *Provided*, that such or any exchange of bonds by said commissioners for the stock of said company was made at the par value of the said bonds: *And provided, further*, that the respective issues of the said bonds by their commissioners do not exceed the amount authorized by said act.

"SECT. 3. No action or proceeding at law, commenced or pending, at the time of the passage of this act, shall abate or be discon-

tinued, or be in any way affected by reason thereof; but the same may be prosecuted or defended, and judgment entered therein, and all proceedings taken to enforce the same, in the same manner as now provided by law, and with the like effect as if this act had not been passed.

"SECT. 4. This act shall take effect immediately."

Mr. T. F. Bush for the plaintiff in error.
Mr. William M. Evarts, contra.

MR. JUSTICE HARLAN, after stating the case, delivered the opinion of the court.

Although the act of 1868 required all bonds issued under its authority to be disposed of for not less than par, and their proceeds invested in the stock of the company, the commissioners exchanged those issued by the town of Thompson directly with the railroad company for an equal amount of the latter's stock. This was in violation of the statute as construed by the Court of Appeals of New York, in several cases to which we had occasion to refer in *Scipio* v. *Wright*, 101 U. S. 665. We there held — following the decisions of the State court, some of which were made long prior to the passage of the particular enactment now under examination — that a purchaser of town bonds, having notice that they were exchanged for stock in a railroad company, in violation of a statute similar to that of 1863, was not a *bona fide* holder, and could not enforce the payment of them. We perceive no reason to qualify that ruling, and therefore proceed to the consideration of other questions not embraced by it.

It is apparent, upon the face of the act of 1871, that the legislature was advised of the fact that the commissioners had departed from the statute of 1868, in exchanging the bonds for stock in the railroad company. And its manifest intention was not only to ratify and confirm such exchange, but to protect any holder of the bonds, who became such in good faith, for a valuable consideration, against any defence arising out of defects or omissions in the consents of taxpayers, provided the exchange was at the par value of the bonds and the issue did not exceed the amount authorized by law.

The main argument of counsel for the town is embraced by the following propositions: *First*, That the consents of taxpayers were not such as the acts of 1868 and 1869 required. *Second*, That the bonds were exchanged for stock, in violation of the statute; and since they recite, upon their face, that they were issued "for value received in the stock of the Monticello and Port Jervis Railway Company," there could be no *bona fide* holders thereof in the commercial sense. *Third*, That they were not issued under the seals of the commissioners, as required by the statute. *Fourth*, It was beyond the power of the legislature, by subsequent enactment, to make them valid obligations against the town, without its assent given in proper form. *Fifth*, That no such assent was given.

If it be conceded that the consents were insufficient; that a seal was necessary as evidence of the official authority of the commissioners; that the recitals on the bonds, reasonably construed, gave notice to purchasers that they had been illegally exchanged for stock, when they should have been disposed of or sold, at not less than their par value, and their proceeds invested in the stock of the company, — the town is, nevertheless, liable, if the curative act of April 28, 1871, was within the constitutional power of the legislature to pass. While this question, in some of its aspects, may be one of general jurisprudence, — involving a consideration of the limits which, under our form of government, are placed upon legislative and judicial power, — it is proper to inquire as to the course of decisions in the highest court of New York upon the authority of the legislature to pass such an act. This becomes necessary in view of the fact that the Court of Appeals of that State has adjudged the act, in its main features, to be unconstitutional. That adjudication, it is contended, is conclusive of the rights of parties in this case. As we are unable to give our assent to this view, it is due to that learned tribunal that we should state, with some fulness, the reasons for the conclusion which we have reached.

Prior to the year 1858 the question arose in several cases pending in different inferior courts of New York as to the constitutional power of the legislature to authorize or require municipal corporations to subscribe for stock in railroad com-

panies, or to issue bonds therefor. The decisions disclosed a conflict of opinion among judges of recognized ability. The question finally came before the Court of Appeals in the year 1858, in *Bank of Rome* v. *Village of Rome*, 18 N. Y. 38. It was there ruled that the State Constitution did not, in terms, or by necessary intendment, restrain the legislature from conferring upon municipal authorities the power to subscribe to the stock of a railroad corporation, and by taxation to raise the necessary funds for the payment thereof. That decision was approved in 19 N. Y. 20. In *People* v. *Mitchell* (35 id. 551), decided in 1866, the court quote, with approval, our decision in *Thompson* v. *Lee County* (3 Wall. 327), where, speaking by Mr. Justice Davis, we said that although a county or other municipal corporation has no inherent right of legislation, and can exercise no power not conferred upon it, in express terms, or by fair implication, the legislature, "unless restrained by the organic law, has the right to authorize a municipal corporation to take stock in a railroad or other work of internal improvement, to borrow money to pay for it, and to levy a tax to repay the loan" and that such authority "can be conferred in such a manner that the objects can be attained, either with or without the sanction of the popular vote."

The decision in *People* v. *Mitchell* is important in other aspects of the present case. The main question was as to the validity of a confirmatory statute, the object of which was to cure the defects in certain affidavits filed in proof of the consent of taxpayers to a proposed municipal subscription of stock in a railroad company. The statute declared that the affidavits should be valid and conclusive proof in all courts and for all purposes, to authorize and uphold the respective subscriptions of the stock and the issue of bonds to the amount specified therein, and that the bonds should be valid and binding on the municipality issuing them, without reference to the form or the sufficiency of the affidavits. The court, referring to the confirmatory statute, said that "it was within the scope of legislative authority to modify the limitations and restrictions in the antecedent acts on this subject, to dispense with prior conditions, and to charge the commissioners with defined and imperative duties." And it quotes with approval our

language in *Thompson* v. *Lee County*, where, referring to a curative statute passed by the Iowa legislature, we further remarked, that "if the legislature possessed the power to authorize an act to be done, it could, by a retrospective act, cure the evils which existed, because the power thus conferred had been irregularly executed."

Thus stood the doctrines of the State court upon the question of municipal subscriptions and as to the power of the legislature, by retrospective enactment, to cure defects in the exercise of powers granted to municipal corporations, when the act of April 28, 1871, was passed. But in 1873 the Court of Appeals decided *People* v. *Batchellor*, 53 N. Y. 128. That was a case of municipal subscription to a railroad corporation under an act passed in 1867, similar, in its main features, to the one passed in 1868 in reference to the Monticello and Port Jervis Railroad Company. It was claimed that the statute had not been complied with in obtaining consents from taxpayers. A subsequent act of the legislature required the subscription to be made upon the consents filed, which the court found not to be such as were prescribed by the statute under which they had been obtained. Without any subscription having been made, or bonds issued, a *mandamus* was sued out to compel the town to become a stockholder in the company, and to issue its bonds in payment of the subscription price of the stock. The court held that the consents of the taxpayers did not embrace such an issue of bonds as the subsequent act required; and that the legislature could not compel a municipal corporation to subscribe stock or issue bonds in aid of the construction of the road of a company, which, although public as to its franchise, was private as to the ownership of its property and its relations to its stockholders. The opinion was concurred in by four of the judges, one concurred in the result, one dissented, and one did not vote.

In *Town of Duanesburgh* v. *Jenkins* (57 id. 177), decided in 1874 by the commission of appeals, — of concurrent jurisdiction and equal authority with the Court of Appeals, — the court, by Johnson, J., reviewed the prior cases in the Court of Appeals involving the questions discussed in *People* v. *Batchellor*. In reference to the latter case it was intimated that the

language of the court upon some of those questions was not in harmony with its previous decisions, and that the opinion should be limited to the point adjudged upon the facts existing in that case. After a careful analysis of those decisions, the conclusions announced were that the authority of the legislature to enable towns and other civil divisions of the State to subscribe for stock and issue bonds in aid of a railroad company, had been established by numerous decisions of the highest court of the State; that there was no distinction in principle between a law authorizing a town, upon a popular vote, to subscribe for such stock and issue bonds therefor, and a law directing the same thing to be done; that when the authority to subscribe was made to depend upon the consent of the town, it was in the discretion of the legislature to prescribe how such consent shall be given; and that, if it originally rested with the legislature to fix the terms on which the towns might act, the same power could remit a part of the conditions imposed, or heal any defects which may have occurred in the performance by the town of those conditions. Much of the language in that case is strikingly applicable to the one in hand. Said the court: "In this case the commissioner has been regularly appointed under the statute, by whom bonds were to be issued and stock subscribed for, provided certain consents were obtained and proofs filed according to the requirements of the several acts upon the subject. Consents were obtained, and proofs were made and filed, which are now on the one side claimed to be, and on the other are denied to be, in conformity to the law. The commissioner meanwhile executed the bonds, subscribed for stock, and delivered the bonds to the company in payment of the subscription; complying with the requirements of the statute in all respects, if the requisite consents had been given and proof made. The only officer of the town who had any duty in the premises acted by signing the bonds; and the legislature, seeing the whole matter, released the conditions which it had imposed, and declared his assent binding upon the town, if the bonds had been issued and the road had been built, and the bonds in that case obligatory. As it might have authorized action in this way and on these conditions by the town originally, I see no objections to

giving effect to its ratification of the action of the town, and holding its consent thus expressed effectual." Again said the court: "In this case the proper officer of the town has acted, the bonds have been issued, and the stock subscribed for. The objection is that the proof of preliminary consents by taxpayers is defective. The action of the legislature is, in my judgment, sufficient to heal this defect, and to sanction the action of the town commissioner in binding the town, the whole consideration to the town having been received in the completion of the road and the issuing of the stock for its benefit."

In *Williams* v. *Town of Duanesburgh* (66 N. Y. 129), decided in May, 1876, the Court of Appeals of New York recognized the correctness of the principles announced in *People* v. *Mitchell* and *Town of Duanesburgh* v. *Jenkins*, citing, among other authorities, *Gelpcke* v. *Dubuque*, 1 Wall. 175; *Thompson* v. *Lee County*, 3 id. 327; *Beloit* v. *Morgan*, 7 id. 619, and *St. Joseph Township* v. *Rogers*, 16 id. 644. Alluding to the statutes for bonding towns in aid of railroads, the court held that the legislature could overlook the defective execution of the power conferred, and, by retroactive legislation, cure defects in the action of municipalities under those statutes. The legislature may, said the court, "by subsequent legislation, when there has been a failure to perform conditions precedent, and the bonds have been issued, dispense with such conditions, and ratify and confirm, and make valid and obligatory upon the municipality, bonds issued without such performance, — at least it may do so in cases where the municipality has, through the construction of the road, or by the receipt of the stock of the company in exchange for the bonds, received the benefit which the statute contemplated as the equivalent for the liability it was authorized to incur. The officers authorized under these statutes to issue the bonds are public agents, and the legislature, looking over the whole matter, may, when in its judgment justice requires it, ratify and confirm their acts, which otherwise would be valid. In this case, the legislature could originally have authorized the bonds of the town of Duanesburgh to be issued under the precise circumstances existing when they were issued, and if the acts of the commissioner have, by subsequent legislation, been ratified, it is equivalent author-

ity to do what has been done." It is worthy of remark, in this connection, that Allen, J., had held, in *Clark* v. *City of Rochester* (13 How. (N. Y.) Pr. 204), decided in 1856, that the legislature had no power under the Constitution to delegate to, or confer upon, municipal corporations authority to subscribe for or to hold stock in railroad corporations, and to issue bonds in payment therefor. Nevertheless, in *Williams* v. *Town of Duanesburgh* (Church, C. J., concurring with him), he recognized *Town of Duanesburgh* v. *Jenkins* as authority, and as declaratory of the law.

But it is contended that the Court of Appeals of New York, in the later case of *Horton* v. *Town of Thompson* (71 N. Y. 513), has decided the identical statute under examination to be unconstitutional, and that this court is bound by the decision. The case was commenced about the time the Circuit Court of the United States for the Southern District of New York sustained the validity of that statute, and gave judgment against the town for the amount of some of the bonds embraced in the issue of $148,000. *Cooper* v. *Town of Thompson*, 18 Blatchf. 484. *Horton* v. *Town of Thompson* was decided in the Supreme Court of the State after the present action was instituted. It was a suit upon two interest coupons of $35 each, belonging to the same issue of bonds. It was finally determined in the Court of Appeals shortly before the trial of this case in the court below. The questions raised were, whether the consent of the taxpayers was defective in not naming the railroad to the construction of which the fund should be applied; and whether the validating act of April 28, 1871, in so far as it declared the exchange of bonds for stock to be legal, was not unconstitutional. Upon the first question the court said, that as the consent was sufficiently comprehensive in its terms to embrace the road in question, and inasmuch as the legislature might legally have authorized it to be in the form in which it was actually given, the act of 1871 "probably cured the defect in its form." But the court, passing that question as one that need not be finally determined, held, upon the authority of *People* v. *Batchellor*, that the legislature had no power to authorize, or direct, the commissioners originally to contract the debt without any consent

or action upon the part of the town; and, that since the consent of the taxpayers was not given for an issue of bonds to be exchanged for stock, the legislature could not validate the bonds and make them binding obligations upon the town, in the hands at least of those who were informed, by their recitals, that, in violation of the statute, they had been exchanged for stock in the railroad company. Four of the judges concurred in the opinion, and three dissented.

It is to be observed that the court does not refer to or overrule *Bank of Rome* v. *Village of Rome*, *People* v. *Mitchell*, *Town of Duanesburgh* v. *Jenkins*, or *Williams* v. *Town of Duanesburgh*, *supra*.

We are unable to reconcile *Horton* v. *Town of Thompson*, upon the points now raised, with the doctrines of those cases or of others decided in the Court of Appeals prior to *People* v. *Batchellor*. It certainly cannot be said that there is such an established, fixed construction by that court of statutes similar to those of 1868 and 1869, or to the confirmatory act of 1871, as obliges us to follow *Horton* v. *Town of Thompson*, or that will justify any one in saying that the present question is finally at rest in the courts of that State. But independently of any such consideration, there are conclusive reasons why we cannot, in opposition to our own views of the law, as expressed in numerous cases, accept the principles of that case as decisive of the rights of the present parties. When the act of April 28, 1871, was passed, it was the established doctrine of the highest court of New York, as it was of this court, that the legislature, unless restrained by the organic law of the State, could authorize or require a municipal corporation, with or without the consent of the people, to aid, by a subscription of capital stock, in the construction of a railroad, having connection with the public interests of the people within the limits of such municipality, and to provide for payment by an issue of bonds or by taxation; that defects or omissions, upon the part of such municipal corporation or its officers, in the execution of the power conferred, or in the performance of the duty imposed, could be cured by subsequent legislation, — certainly, where the corporation had received the benefits which the original subscription was designed to secure. As, therefore, the legis-

lature might, in the original act under which these bonds were issued, have authorized or required the bonds to be exchanged directly with the railroad company for capital stock, it could ratify and confirm such exchange, even where originally illegal, so as to make them binding obligations upon the town in favor of all who then held, or might thereafter acquire, them, in good faith or for a valuable consideration. It is, therefore, an immaterial circumstance that the recitals in the bonds may have furnished notice that they were issued originally in violation of the statute. That was the very difficulty which the act of 1871 was designed to remove, and, as matter of law, it was removed, if regard be had to the settled doctrines of this court, or to the decisions of the highest court of the State rendered previously to, and which were unmodified at, the passage of that act. It results that from that moment the bonds, by whomsoever held, whether by the railroad company or by others, became binding obligations upon the town, as much so as if they had originally been sold and their proceeds invested in the stock of the railroad company, as required by the acts of 1868 and 1869. If the rights of those holding the bonds were in any degree affected by the subsequent decision in *People* v. *Batchellor*, the later decision in *Town of Duanesburgh* v. *Jenkins* restored the law, so far as the courts of New York were concerned, as it undoubtedly was declared to be at the time the act of 1871 was passed. The defendant in error acquired the bonds in suit in 1875, before the decision in *Horton* v. *Town of Thompson*, and when, according to the principles announced in *Town of Duanesburgh* v. *Jenkins* and many prior cases in the Court of Appeals, the act of 1871 must have been sustained as a valid exercise of legislative power. He purchased them for value at public auction in the city of New York, without notice of any defence thereto, or of the pendency of any suit involving their validity. If the recitals in the bonds gave notice that the acts of 1868 and 1869 forbade their exchange for stock, and required them to be sold and their proceeds invested in such stock, the purchaser is also presumed to have known, not only that such exchange had been legalized by the act of 1871, but that the authority of the legislature to pass that act was sustained by the decisions of the highest court of the State rendered prior to

its passage. His rights, therefore, should not be affected by a decision rendered after they accrued, which decision is in conflict with the law, as declared not only by this court in numerous cases, but by the highest court of the State, at and before the time he purchased the bonds.

The assignments of error present another question which it is our duty to notice.

The town pleaded in bar of the action a judgment of the Supreme Court of the State in an action commenced in June, 1869, by the attorney-general of the State, on the relation of Charles Kilbourne and others, taxpayers, against the Commissioners of the Town of Thompson, F. C. Crowley, C. L. Colt, William D. Colt, the Monticello and Port Jervis Railway Company, and the Town of Thompson. A temporary injunction was obtained on 24th June, 1869, restraining the respondents and each of them from using, loaning, or selling the bonds and from executing any other bonds based upon the consents given by the taxpayers. But that injunction was vacated and set aside on 27th July, 1869. A final decree was rendered in 1872 by which the bonds were declared to be null and void, and they as well as the certificates of stock exchanged therefor directed to be delivered up, by the respective parties, and cancelled. The general ground upon which the decree rested was that the provisions of the act under which they were issued were not complied with. From that judgment no writ of error or appeal seems to have been prosecuted. We have already seen that the entire issue of bonds was delivered to the railroad before the commencement of that action, that is, in May, 1869; and that after the dissolution of the injunction, to wit, in September and November, 1869, a large portion of the bonds had found their way into the hands of others who purchased them for value and without any notice of the pendency of the suit in the Supreme Court.

There is an insuperable difficulty in the way of plaintiff in error using the judgment in that case to defeat the present action. The bonds were negotiable securities, which had passed from the town before the action in the Supreme Court of the State was commenced. Those who purchased them, in the market, pending that litigation, or after it terminated,

without notice of the suit, and in good faith, for value, could not be affected by the final decree. Had the complainants caused them to be surrendered to the custody of the court, pending the suit, they could have been cancelled in pursuance of the directions contained in the final decree. But the actual custody of the railroad company was never disturbed, nor sought to be disturbed. The knowledge by its officers of the objects of the action, or of the terms of the final decree, could not affect a *bona fide* purchaser for value who had no such knowledge. Our decision in *County of Warren* v. *Marcy* (97 U. S. 96), which is partly based upon adjudications in the courts of New York (*Murray* v. *Lylburn*, 2 Johns. (N. Y.) Ch. 441, and *Leitch* v. *Wells*, 48 N. Y. 585), is conclusive upon this branch of the case.

It is scarcely necessary to say that the decree of the Supreme Court of the State can derive no special force, as against the defendant in error, by reason of the third section of the act of April 28, 1871. That section only protected from the operation of the act any action or proceeding at law, commenced or pending at the time of its passage. That provision furnishes, perhaps, an explanation of the failure of the Supreme Court, in its opinion, to refer to the act of 1871, which had passed before its final decree was entered. The purpose of the third section was only to require existing actions or proceedings at law to be determined without reference to that act, and does not affect the rights of a *bona fide* purchaser who was not a party to the suit, and was without notice of its pendency.

We perceive no error in the record.

Judgment affirmed.

RAILROAD COMPANY v. FALCONER.

RAILROAD COMPANY v. WEEKS.

139-490

1. In accordance with the petition of the tax-payers of a town in New York, dated March 25, 1872, the county judge appointed commissioners, who were empowered and directed to subscribe for stock in a railroad company when its road should be constructed through a certain village. The road was not so constructed until Oct. 20, 1875. *Held*, that as, by the terms of the petition and the proceedings of the judge thereon, the construction of the road was a condition precedent to the exercise by the commissioners of their power to make the subscription, they, being merely agents of the town, had no authority to act in the premises until that condition was performed.
2. A contract, therefore, under date of June 14, 1872, between the company and the commissioners, whereby the latter assumed to bind the town to subscribe for stock when the road should be so constructed, being *ultra vires*, no rights of the company were impaired by the amendment to the constitution of the State (*infra*, p. 822), which took effect Jan. 1, 1875, and prohibited all municipal aid to corporations by subscriptions of stock, or otherwise.
3. *County of Moultrie* v. *Savings Bank* (92 U. S. 631) distinguished.

ERROR to the Supreme Court of the State of New York.

The facts are stated in the opinion of the court.

Mr. Richard T. Merrick, for the plaintiff in error.

Mr. Richard P. Marvin and *Mr. Clarkson N. Potter*, *contra.*

MR. JUSTICE BRADLEY delivered the opinion of the court.

The first of these cases was a petition filed by certain tax-payers of the town of Ellicott, in Chatauque County, New York, on behalf of themselves and others, against the Buffalo and Jamestown Railroad Company and Weeks, Breed, and Jones, commissioners to issue bonds for the town, seeking to restrain the issue and delivery of certain town bonds to the railroad company and to prevent a subscription to its capital stock on behalf of the town. In this case a decree was made in favor of the petitioners, awarding a perpetual injunction against the issue of the bonds and the subscription of stock; and this decree was affirmed by the Court of Appeals. The second case was commenced by submitting to the Supreme Court of the State, in a special statutory procedure, an agreed statement of facts in relation to the issue of the bonds and the

subscription of the stock which form the subject of the first action, with a prayer on the part of the railroad company, as plaintiffs, for an order directing the issue of the bonds and the subscription of the stock, and a prayer of the town commissioners, as defendants, for a decree against such issue and subscription. In this case a decree was made as prayed by the defendants, which was also affirmed by the Court of Appeals. To reverse the decrees in both of these cases, the present writs of error were sued out by the Buffalo and Jamestown Railroad Company, the plaintiff in error.

The jurisdiction of this court to review the decision of the State Court of Appeals is based upon the effect given by said court to the amended Constitution of the State of New York, which went into operation on the first day of January, 1875, whereby, as is alleged by the plaintiff in error, said constitution was made to impair the obligation of a contract previously entered into by the town of Ellicott with the railroad company to subscribe to the capital stock of the latter to the amount of $200,000, and to deliver to it the bonds of the town in payment of said subscription. The clause of the amended constitution to which such effect is alleged to have been given, is that which declares as follows: "No county, city, town, or village shall hereafter give any money or property, or loan its money or credit, to or in aid of any individual, association, or corporation, or become directly or indirectly the owner of stock in or bonds of any association or corporation, nor shall any such county, city, town, or village be allowed to incur any indebtedness, except for county, city, town, or village purposes." The Court of Appeals held that there was no such contract in existence, as alleged by the plaintiff in error, when the amended constitution went into effect, and, therefore, that the prohibition contained in the clause just quoted was conclusive against the right and power of the town of Ellicott to issue the bonds and subscribe for the stock which form the subject of this litigation. The question for us to consider, therefore, is whether any such contract, valid and binding on the town, did exist.

Briefly stated, the facts of the case were as follows: In 1872, when the proceedings took place out of which the present controversy arose, the laws of New York in relation to giving

municipal aid to railroad companies like that of the plaintiff in error were contained in three acts of the legislature passed respectively, one on the 10th of May, 1869, by way of amendment to the general railroad law; an amendment to this amendment, passed April 28, 1870; and a further amendment, passed May 12, 1871. By the first of these statutes it was provided that, whenever a majority, in number and amount of taxable property, of the taxpayers of any municipal corporation should make application to the county judge, by petition expressing a desire that the corporation should create and issue bonds to any amount named in the petition (not exceeding one-twentieth of the taxable property in the corporate limits), and should invest the same, or the proceeds thereof, in the stock or bonds of any designated railroad company in the State, the said county judge should give public notice of a hearing to be had before him for the purpose of ascertaining whether the petition was, in fact, signed by the requisite majority of taxpayers; and, having determined this to be the fact, he should then appoint from the freeholders, residents, and taxpayers of the corporation, three commissioners to carry out the request of the petitioners. The duties imposed upon these commissioners were limited and specific, and were, to prepare and execute the proposed bonds in the name and under the seal of the corporation, and in its name to subscribe to the stock of the railroad company designated in the petition, and to pay for the same by exchanging the bonds therefor, or the proceeds thereof. They were also authorized, after subscribing the said stock, to represent the town as a stockholder at all meetings of the railroad company. The act of 1870 also authorized the commissioners and the railroad company to enter into an agreement for limiting and defining the times when and proportions in which the bonds should be delivered, and the places where and purposes for which they should be applied. By the act of 1871 the act of 1869 was modified by inserting the following clause in the first section, namely: "The petition authorized by this section" [that is, the petition of the taxpayers presented to the county judge] "may be absolute or conditional; and, if the same be conditioned, the acceptance of a subscription founded on such petition shall bind the railroad company

accepting the same to the observance of the condition or conditions specified in such petition."

In the present case the petition of the taxpayers of the town of Ellicott was dated March 25, 1872, and expressed their desire in the following terms: to wit, "Your petitioners desire that the said town of Ellicott shall create and issue its bonds to the amount of $200,000, and invest the same, or the proceeds thereof, in the stock of the Buffalo and Jamestown Railroad Company, upon the condition that the line of the railroad of said company to be constructed from the city of Buffalo to the line of the State of Pennsylvania, in said county, shall be located and constructed through the village of Jamestown in said town of Ellicott, before said bonds shall be delivered to said company or sold." The petition contained the usual averment that the petitioners were a majority of the taxpayers, &c., and, after the proper proceedings had, the county judge appointed the commissioners before named to carry out the purposes of the petition.

On the 14th of June, 1872, the commissioners entered into an agreement with the railroad company (the plaintiff in error), by which they agreed that when the said company should have located and constructed, through the village of Jamestown, in said town of Ellicott, their proposed railroad running from Buffalo to the state line of Pennsylvania, they, the said commissioners, or their successors in office, would immediately subscribe, in the name of the town, to the capital stock of the company to the amount of $200,000, and would pay for it by delivering to the company the bonds of the town, to be executed by the commissioners or their successors in office, and to bear date of the time of such subscription; and in consideration thereof the railroad company agreed that they would receive such subscription and payment, and issue proper certificates for the stock so to be subscribed. The agreement contained a reference to the petition and proceedings under which the commissioners were appointed, and a declaration on their part that they did not undertake or agree to perform the conditions of the contract except as empowered and authorized by said proceedings.

The defendants in error contend that this agreement was

ultra vires of the commissioners, and wholly without force or effect as against the town of Ellicott.

On the 26th of August, 1874, the commissioners caused to be prepared and executed bonds of the town of Ellicott to the amount of $200,000, payable to the railroad company or bearer, and delivered them to Robert Newland and A. F. Allen, as trustees, taking from them a receipt in which it was declared that Newland and Allen should, upon the completion of the road through Jamestown, and upon the commissioners having subscribed $200,000 to the capital stock of the railroad company, and having received the certificates therefor, deliver said bonds to the railroad company, in payment of such subscription. It is manifest that this deposit of bonds cannot affect the rights of the parties. By the terms of the deposit, they were only to be delivered when the stock was subscribed; and, if that cannot be lawfully done, the bonds must be returned to the town to be cancelled.

The railroad was not constructed through Jamestown until the 20th of October, 1875. On the 1st of January, 1875, when the amended constitution went into effect, nothing had been done except to survey the route and file a map thereof.

The question then is, whether, at that time, under the circumstances above detailed, the railroad company had acquired by contract a vested right to have and receive the town's subscription to its stock, and a delivery of the bonds in payment thereof.

We are clearly of opinion that the agreement made by the commissioners with the railroad company in June, 1872, was *ultra vires*. Their powers were confined to subscribing for the stock and making and issuing the bonds in payment thereof when and as the petition of the taxpayers directed, — that is, after the road was completed through Jamestown. By the act of 1870 they might also stipulate as to the instalments in which the bonds should be delivered, and the purposes for which they might be applied. But the power to do this being but an incident of the principal power to make and issue the bonds, and being only intended to enable the commissioners to prescribe the times and manner of their issue and the uses to which they should be applied, would not properly arise, and

could not be effectively exercised, until the principal power itself arose and became exercisible. Whilst, however, the commissioners had the power, or, rather, would have the power, at the prescribed time, to subscribe for the stock and to execute and issue the bonds, neither the statutes nor the taxpayers' petition gave them any power to make a contract to subscribe for stock, nor a contract to deliver bonds to the railroad company. They were not charged with any such duty; they were not invested with any such power.

The case of the railroad company, therefore, must stand upon the effect of the taxpayers' petition and the proceedings had thereon before the county judge. If, under the operation of existing statutes, these proceedings amounted to a contract between the town and the railroad company, no subsequent legislation, or constitutional amendment, could lawfully impair its obligation. But it is difficult to see how the said petition and proceedings, including the appointment of commissioners, can be construed as amounting to such a contract. All that was done by the town, through the action of its taxpayers and the county judge, was to appoint agents for making a subscription and issuing bonds on the happening of a certain event. When that event should happen, it would be the duty of those agents, under the fifth section of the act of 1869, to execute their commission. The words of the section are: "Such commissioners are further empowered and *directed* to subscribe," &c. But to whom did they owe this duty? Evidently to the town which appointed them; not to the railroad company. The latter came under no obligation, and acquired no rights, until the commissioners should subscribe to its stock. Had no conditions been imposed by the petition, the duty of the commissioners to subscribe stock and issue bonds would have arisen immediately after their appointment; — but it would have been an obligation owed to their principals alone. The conditions which were in fact imposed required, it is true, something to be done by the railroad company before the commissioners could act; but no stipulation was demanded of the company, or given by it, that this something should be done. The two parties were not brought together. There was no mutuality between them. Each was free to act as it listed.

This was the condition of things on the 1st of January, 1875, when the new constitution went into operation, prohibiting all municipal aid to corporations or individuals, by subscription of stock or otherwise. It seems to us, therefore, that the New York Court of Appeals was right in deciding that no contract existed at that time.

After the amendment took effect, no county, city, town, or village could subscribe for railroad stock; and, of course, no agent or attorney of any such corporation could do so. What had not been done before, in this regard, could not be done afterwards, unless some valid contract required it to be done. But, as we have shown, no such contract existed in this case. The action on the part of the town was voluntary up to the time of the constitutional amendment. The railroad company may have expected a subscription when their road should be completed; but they had no subscription, and had no valid agreement that any would be made. Everything was inchoate and undetermined up to the first day of January, 1875; and then all power to subscribe for stock was taken away from the town.

County of Moultrie v. *Savings Bank* (92 U. S. 631) is confidently relied on by the plaintiff in error to sustain their position that a contract did exist. But an examination of that case will show that it was very far from being parallel to the present. There the statute of Illinois authorized the board of supervisors of the county of Moultrie to subscribe to the stock of a particular railroad company by name, to an amount not exceeding $80,000, and to issue bonds therefor when the road should be opened for traffic between certain points. Before this event took place, the board ordered that a subscription to the stock of the company in the sum of $80,000 be made, and that, in payment therefor, bonds should be issued to the company when the road should be open for traffic. This resolution was acted upon by the railroad company as a subscription, and was entered on its minutes, and the promised bonds were disposed of by contract. This court held that the board of supervisors itself had complete authority to make a present subscription, and that this included the power to agree to subscribe, and that the resolution amounted to a subscription, or,

at least, to an agreement to subscribe, which, being accepted and acted upon by the railroad company as such, created a contract between the county and the company. In the case before us, no act equivalent to the action of the board of supervisors of Moultrie County was ever done by any person or body of persons, having, at the time of such act, a present power to subscribe for stock or to issue bonds of the town of Ellicott. The taxpayers had no authority to make a subscription of stock, or to issue bonds, or to make any contract to do so; they could only express their desire that it should be done, and that commissioners should be appointed to do it; and when they did express such desire, it was conditional, as before stated. The commissioners, as we have seen, had no power to act, for no power was given them to act, until the railroad was located and completed through Jamestown. It follows that nothing which was done in the present case can be fairly regarded as equivalent to the action of the parties in the case of Moultrie County. The circumstances of the two cases were essentially different.

We think that there is no error in the record of either of the cases, and that the decrees in both must be

Affirmed.

BROWN v. SLEE.

A., the executor of the deceased member of a firm, entered into a contract in writing with B., the surviving partner, whereby he sold and transferred to the latter all the interest of the testator in the effects of the partnership for a valuable consideration, consisting in part of lands. The contract also stipulated that B. should, within five years from its date, if A. so desired, "purchase back" the lands at a certain price in cash. *Held*, that the respective rights and obligations of the parties under the contract were fixed when A., within the five years, duly notified B. to make the purchase at the expiration of them, and that, on tendering to B. within a reasonable time thereafter a proper deed for the lands, A. could maintain a suit for the stipulated price.

APPEAL from the Circuit Court of the United States for the District of Iowa.

The facts are stated in the opinion of the court.

The case was argued by *Mr. George G. Wright* and *Mr. Chester C. Cole*, with whom was *Mr. William M. Randolph*, for the appellant, and by *Mr. Charles C. Nourse* for the appellee.

MR. CHIEF JUSTICE WAITE delivered the opinion of the court.

This is a suit in equity and presents the following facts: Prior to Aug. 6, 1870, Talmadge E. Brown and Jarvis Langdon were partners in business. On that day Langdon died, leaving a will, in which he appointed John D. F. Slee, Charles J. Langdon, Theodore W. Crane, Olivia L. Langdon, and Samuel L. Clemens, executors. On the 25th of April, 1871, the executors and Brown entered into the following agreement in writing: —

"The executors of Jarvis Langdon, deceased, for value received, hereby sell, assign, set over, and transfer unto Talmadge E. Brown all the right, title, and interest of J. Langdon, deceased, in or to the undivided property or assets of the late firm of T. E. Brown & Co., of Memphis, Tennessee.

"Subject, however, to all taxes and assessments thereon, now made or hereafter to be made, to all indebtedness therefor, and to all liabilities of said firm or any of the members thereof, for transactions in the business of the firm in tort and contract, and subject to all judgments against the said firm or any member thereof, recovered or to be recovered, and all costs, disbursements, officers and counsel fees, and all liability for contribution to any other partner or person in consideration of moneys paid or to be paid upon any liability of, from, and against all of which real or possible liabilities, and of, from, and against any other liability growing out of the transactions of said firm, said Brown agrees to fully indemnify and save harmless the executors, heirs, and next of kin of said J. Langdon, deceased.

"And said Brown further agrees to pay and discharge any just and legal claim of any person or persons whomsoever for any share of the profits or proceeds of the business of said firm, whether said claim be against the said firm or against the said Langdon, deceased, individually, and to fully indemnify and save harmless the executors, heirs, and next of kin of said Langdon of, from, and against any such claim; all the aforesaid agreements of indemnity to apply

not only to the liability growing out of the transactions of said firm, but also to any possible liability growing out of the transactions of the predecessors of said firm.

"Said Brown agrees to pay for such interest as follows:—

"*First.* Upon the assignment of the interest above mentioned twenty-five thousand dollars ($25,000) in cash, together with the further amount of fifty thousand dollars ($50,000) in notes, satisfactorily indorsed by B. F. Allen, or other satisfactory indorsers, and running from three (3) to eighteen (18) months at a fair average time from these extreme points of time mentioned.

"*Second.* A certain tract of land consisting of one hundred and thirty (130) acres, situated within the limits of the corporation of the city of Des Moines, Iowa, and also a certain plantation situated on the White River, in Arkansas, consisting of sixteen hundred (1,600) acres of land, and all the buildings, improvements, and appurtenances belonging thereto. In reference to the lands in Iowa and Arkansas, the purchaser hereby agrees that in five years from the date of this contract he will, if the estate or its legal assigns so desire, purchase back the lands for twenty-five thousand ($25,000) dollars, paying that sum in cash.

"This agreement is upon condition that the aforesaid two tracts of land are owned by said Brown in fee-simple, absolute, free, and clear of all taxes, assessments, and incumbrances of whatever nature, and that they shall, before this assignment shall be operative, be conveyed by full covenant deeds to the executors of said J. Langdon, deceased, said conveyances to be executed also by the wife of said Brown, and said executors to be furnished with properly authenticated abstracts of title thereof, showing the title thereof to be perfect and that they are free and clear of all incumbrances.

"The executors further agree that upon the final performance of this contract they will surrender certain notes now held by the estate against T. E. Brown, amounting to the sum of seventeen thousand dollars ($17,000), the aforesaid interest shall be assigned upon the execution of said contract and the delivery of notes, money, and deeds of the land as aforementioned.

"Said Brown is to have sixty (60) days within which to make the delivery and payments described in this contract.

"Dated 25th April, 1871.

"The estate of J. Langdon, per

"J. D. F. SLEE, *Executor and Attorney.*

"T. E. BROWN."

On the 25th of June, 1871, Brown paid the cash called for by the contract, gave his notes, and conveyed the Des Moines land to Charles J. Langdon. Thereupon the executors made to him the following assignment: —

"In consideration of one hundred thousand dollars this day received of T. E. Brown, as by the terms of our contract made with him, bearing date April 25, 1871, we, the executors of the last will of Jarvis Langdon, deceased, do hereby sell, assign, and transfer to said T. E. Brown all our rights and all the right, title, and interest Jarvis Langdon had in his lifetime in and to the property and assets of the firm of T. E. Brown & Co., at Memphis, Tennessee, subject to the terms and conditions of our said contract of April 25, 1871, above mentioned.

"J. D. F. SLEE, *Executor.*
"C. J. LANGDON, *Executor.*
"T. W. CRANE, *Executor.*
"SAMUEL L. CLEMENS, *Executor.*
"OLIVIA L. LANGDON, *Executrix.*"

On the 3d of July, Brown took from Charles J. Langdon a lease of the Des Moines land for five years, and, for the use, agreed to pay the taxes and keep the premises in repair. Langdon, however, retained the right to sell the property, or any part of it, in which case the lease was to terminate, so far as it related to the property sold.

On the 30th of August the following supplemental agreement was entered into by the parties: —

"It is hereby mutually agreed by and between Talmadge E. Brown and J. D. F. Slee and others, executors of the estate of Jarvis Langdon, deceased, that said Brown need not perfect his conveyance to the plantation on White River, in Arkansas, as he is required to do by contract with said executors, dated April 25, 1871, but may, in lieu thereof, transfer and assign to said executors a certain judgment now owned by him against the county of Buena Vista, State of Iowa, on which there is due to him five thousand ($5,000) dollars, for the purposes named in said contract of April 25, 1871, said Brown to guarantee the collection of said judgment.

"It is further understood and agreed that if said executors desire it, said Brown shall, at the expiration of the five (5) years stated in said contract of April 25, 1871, repurchase the 130 acres of land in

the city of Des Moines at $25,000, the same as though the plantation aforesaid was included therein.

"And it is further understood that if any of said Buena Vista judgment shall within said five (5) years be paid to said executors, they will allow interest thereon at the rate of seven (7) per cent per annum, and the principal so paid may be deducted from the $25,000 to be paid by said Brown for the repurchase of the Des Moines property.

"In witness whereof, said parties have hereunto set their hands this 30th day of August, 1871.

"J. D. F. SLEE, *Executor*,
"And Attorney for the Executors of the Estate of J. Langdon, Deceased.
"TALMADGE E. BROWN."

On the 30th of October, 1875, Charles J. Langdon wrote the following letter to Brown, which reached him in due course of mail: —

"ELMIRA, Oct. 30, 1875.

"T. E. BROWN, Esq., Des Moines, Iowa.

"DEAR SIR, — My wife's health is so poor that I am obliged to go away with her, and I shall sail for Europe Saturday next, for an absence of four, six, or eight months. I have left all necessary papers for the closing of our matters, the re-deeding of the Des Moines land and all other necessary business, with Mr. Slee. The balance of $25,000, less what has been paid on Buena Vista County judgment, will be due April 25, 1876, and we shall desire the money at that time as per contract.

"Yours truly, C. J. LANGDON, *Executor.*"

To this letter Brown made no reply until May 26, 1876, when he wrote as follows: —

"DES MOINES, 26th May, 1876.

"CHAS. J. LANGDON, Esq., Elmira, N. Y.

"DEAR SIR, — Your letter to me last fall in regard to the land did not seem to require an early answer, and I have delayed it until now. I shall not be able to pay you the money this year, and propose the following, which I trust will answer your purpose: 25th April, '77, $5,000.00 and a like sum on the 25th day of each April following, all unpaid sums to draw six per cent per annum from April 25, '76, the land to remain in your name until it is paid. The last payment will be fractional part of $5,000, of course. This

is small interest, but interest must in future be less than it has been, and this is all I get on money that has been due longer than this has to you. There has been nothing paid on the Buena Vista judgment since remittance to you. The county are trying to have the same set aside for some informality or fraud, and may succeed, but I think not.

"Very truly yours, &c., T. E. BROWN."

On the 31st of May Langdon answered this letter declining the proposition, and on the 4th of June Brown wrote him as follows: —

"DES MOINES, 4 June, '76.

"C. J. LANGDON, Esq., Elmira, N. Y.

"DEAR SIR, — I am in receipt of your favor of the 31st May. You say the proposition does not suit you. This does not surprise me. I did not think it would. I am very sorry I cannot pay this money and take the land now. You must take such course in the matter as seems to your interest. I do not ask or expect you to be governed by what may seem to be mine.

"Yours, &c., T. E. BROWN."

On the 26th of June, 1876, the executors caused to be tendered to Brown a deed for the Des Moines land and demanded the payment of $23,381.14, and again on the 17th of July they tendered the deed accompanied with an assignment of the Buena Vista County judgment. The money not being paid, this suit was begun on the 19th of July to obtain a sale of the property to pay the balance that was due of the agreed sum of $25,000, and if the proceeds were not sufficient to pay the whole debt, to obtain execution for what remained unsatisfied.

Among the assets of the firm was a debt against one John S. Baldwin. This debt was originally contracted to Langdon, but afterwards, at the request of Langdon, the amount was transferred to the firm, Baldwin being charged and Langdon credited with it on the books. Baldwin became insolvent, and a part of his debt has never been paid. By way of defence to the original bill by the executors, Brown filed a cross-bill, in which he alleged in substance that when this account against Baldwin was transferred to the firm, Langdon individually guaranteed its payment in writing, and that in

consequence he was permitted while in life to draw large sums from the partnership. It was then averred "that the guaranty of the said Langdon was always recognized and treated by him (Langdon) as an individual guaranty, made upon his own personal account, and not as any part of the firm's business, or as necessarily or properly connected therewith. That at the time of the purchase of the interest of said Langdon's estate from his executors as hereinbefore stated, it was believed, or, at all events, there was a hope and a probability that something, at least, upon the balance due from said Baldwin's account, and possibly all might be collected, or in some manner realized from said Baldwin. And that said claim against said Baldwin was spoken of, and was the subject of conversation between the parties at the time of the purchase, and the same was not settled or adjusted or understood to be embraced in the terms of the settlement for the reason, among others, of the hope that the same might be realized in whole or in part from the said Baldwin.

"And your orator, therefore, distinctly avers, as a substantive and existing fact, that the claim upon Langdon's executors, by reason of that guaranty, was not embraced in said settlement, nor intended to be embraced, but was omitted therefrom for adjustment between the parties in case the said Baldwin should fail to pay any portion of said balance against him."

The contract between Brown and the executors, on which the original suit was brought, was made an exhibit to the cross-bill, and the prayer was that the estate of Langdon might be charged with what was due on the debt. The executors demurred to the cross-bill, and on the final hearing in the Circuit Court this demurrer was sustained and a decree rendered on the foregoing facts, finding due from Brown $26,320.37 for the repurchase, and ordering a sale of the property to pay the debt. From that decree Brown appealed.

There are two principal questions in this case, to wit: 1, whether, on the facts, Brown is bound to purchase back the Des Moines property and pay the balance of the $25,000 which remains after deducting the collections on the Buena Vista County judgment; and, 2, whether the demurrer to the cross-bill was properly sustained.

To our minds the fair construction of the contracts on which the case depends is that Brown purchased the interest of the estate of Langdon in the partnership property for $100,000 payable $25,000 in cash, $50,000 in notes, and $25,000 in the Des Moines land and Buena Vista County judgment, unless the executors concluded not to keep the land and the judgment, in which event he was at the end of five years to purchase them back and pay in money the $25,000 for which they were taken, the executors crediting him with what had in the mean time been collected on the judgment, with interest at the rate of seven per cent per annum.

This is not only the fair inference from the language of the contracts themselves, but it seems to have been the understanding of the parties as shown by their conduct at the time and since. Thus, on the 25th of June, although Brown did not then convey the Arkansas land, the executors made their transfer of the partnership property, "in consideration of one hundred thousand dollars" that day received. And when the Buena Vista County judgment was taken in lieu of the Arkansas lands, it was stipulated that all collections made within the five years should be credited with interest on the $25,000 if the executors desired the repurchase to be made. So when Langdon wrote Brown on the 30th of October, 1875, he said, "The balance of twenty-five thousand dollars, less what has been paid on the Buena Vista County judgment, will be due April 25, 1876, and we shall desire the money at that time as per contract." He thus treated what was to be paid as a debt which the executors desired to have met at maturity. Brown evidently looked on the transaction in the same way, for, in his letter written a month after the time for repurchase had expired, he made no objection to the failure to tender a reconveyance on the day, and demand the payment of the money, but said, "I shall not be able to pay you the money this year, and propose the following, which I trust will answer your purpose." Under these circumstances, all that was necessary to put on Brown the obligation to take back the land and pay the money instead, was for the executors to signify to him in some appropriate way that they had concluded not to keep it in satisfaction of the sum for which it was to be taken. This need not neces-

sarily be done on the day the repurchase was, under the contract, to be made. It was enough if at any time before the expiration of the five years the conclusion was finally reached and Brown properly notified. The reasonable presumption is that the parties expected the election would be made before the end of the time, because, as the money was to be paid on the day, some preparation would ordinarily be required to meet so large a demand. Time was material in the sense that the election must be made within the five years. If that was not done, the obligation of Brown to take back the property was gone. He was not bound to repurchase unless the desire that he should do so was expressed in proper form before the time elapsed.

We proceed now to consider whether the executors did in fact make their election in proper form and within the time. This depends entirely on the letter of Langdon under date of the 30th of October, 1875, and the reply of Brown of the 26th of May following. No particular form of election was provided for in the contracts. All they required was that the proper representatives of the estate should, within the time, express to Brown their desire that he "purchase back" the lands under the contract.

The letter of October 30 was written by Charles J. Langdon in his own name as executor, but he held the title to the property evidently with the assent of his co-executors. He wrote that he had left all the necessary papers with Mr. Slee, another of the executors, and concluded by saying that "*we* shall desire the money at that time as per contract." In what he did he was evidently acting for the estate, and as his acts have been adopted by all the executors as the basis of this suit, it is clear that his letter was at the time the expression of their will, and bound them so far as necessary to enable Brown to get the title from him if the money was paid as the contract required.

This letter did not in so many words say to Brown that the executors desired him to repurchase under the contract; but it did tell him they desired the money, which the contract called for only in the event of his repurchase. This could not be understood otherwise than as an expression of a desire that

he purchase back the property, under the contract. And evidently it carried that idea to Brown, for he immediately began to treat for terms, not because he claimed not to be bound, but because, to use his own words, he was "not able to pay." His conduct corresponded in all respects with that of the executors, and his letter is not to be treated as a waiver of the neglect of the executors to make their election at the day, but as a recognition of the fact that a proper election had been made and accepted.

It is claimed on the part of the appellants, however, that to enable the executors to recover they must prove "both an election to sell and the delivery or tender of a deed on the day fixed for performance." As we have already shown, it needed no tender of a deed on the day to require Brown to repurchase. It was enough if, before the expiration of the time, the executors made their election that he should do so, and signified it to him in proper form. That being done, the rights of the parties respectively under the contract were fixed. Brown became bound to repurchase and pay the money, and the executors to receive the money and reconvey. Either party could then require the other to perform, and neither could insist on the default of the other, so long as he was himself behind in his own performance. Brown could not demand a deed until he tendered the money, and the executors could not require the money until they had offered a deed. Neither party offered to perform on the day, and, therefore, one was as much in default as the other. Such being the case, either party, after relieving himself from his own default by performance or an offer to perform, could require the other to perform within a reasonable time. Neither could insist that the other had lost his rights under the contract until he had himself done what he was bound to do. The failure of both parties to perform on the day was equivalent to a waiver by each of the default of the other. The executors did offer to perform within a reasonable time after the day, and we think are entitled to recover.

As to the cross-bill. Upon this part of the case it must be assumed as a fact admitted of record, that when Langdon, the deceased partner, transferred his debt against Baldwin to the firm and got credit for it, he guaranteed in proper and legal

form its ultimate collection, and that it was taken on the faith of this obligation on his part. The only question, therefore, is whether, under the contract between Brown and the executors, that obligation was assumed by Brown, or, in effect, discharged. Brown took the assignment of the estate's interest in the firm property, subject, among other things, to all possible liabilities of Langdon for the transactions of the firm, and he agreed to indemnify the estate against all liability growing out of such transactions. The acceptance of the transfer of the Baldwin debt was a firm transaction, and the guaranty of Langdon grew out of that transaction. If the debt should not in the end be paid, the balance might be charged back to Langdon when the affairs of the partnership were closed up, and his interest in the good assets would be diminished to the extent of such a charge. The firm, as a firm, could not sue him on his guaranty. All that could be done would be to take his liability into account when settlements and divisions were made between the partners. This liability occupied a position in no material respect different, so far as winding up the affairs of the partnership were concerned, from an ordinary overdraft in the progress of the business. It was a liability to which Langdon was bound to respond at the proper time. If, instead of buying out the interest of the estate, Brown had wound up the affairs of the partnership and divided the proceeds, the balance due from Baldwin might have been set off to the estate as so much cash, but he could not have sued the estate directly on the guaranty. The liability was one that could only be enforced as an incident to the settlement of the business, and a statement of the accounts between the partners. The contract between Brown and the executors made such a settlement and such a statement of accounts unnecessary. Brown took the place of the estate in the partnership, assumed all its liabilities to or for the firm, and agreed to pay $100,000 to the estate for what would be distributable to it from the assets on a full and final adjustment of the accounts of the individual partners, and the reduction of all the assets to money. That was the evident purpose of the parties as expressed by the contract they made. The averments of Brown as to the obligations of the estate are contradicted by the terms of the written

instrument to which he refers, and on which the rights of the parties depend. There is no allegation of fraud or mistake in reducing the contract to writing. It follows that the demurrer to the cross-bill was properly sustained.

Decree affirmed.

RICHMOND MINING COMPANY v. EUREKA MINING COMPANY.

E. and R., two mining companies, in settlement of the differences between them respecting the possession of certain ground and the ores therein contained in the Eureka Mining District in Nevada, entered into an agreement establishing between specified points on the earth's surface a boundary line between their respective claims, and stipulating that E. would convey to R. all the mining ground and claim lying northwesterly of said line, including "all veins, lodes, ledges, deposits, dips, spurs, and angles on, in, or under the same contained," and that R. would convey to E., with a covenant of warranty against its own acts, all its right, title, and interest in and to any and all the land or mining ground situated on the southeasterly side of said line, and in and to "all ores, precious metals, veins, lodes, ledges, deposits, dips, spurs, and angles on, in, or under the said land or mineral ground." The agreement further declared that it was the object and intention of the parties to confine the workings of R. "to the northwesterly side of the said line continued downward to the centre of the earth." *Held*, that the agreement must be construed as extending the boundary line downwards through the dips of the veins or lodes wherever they may go in their course towards the centre of the earth.

ERROR to the Circuit Court of the United States for the District of Nevada.

This is a suit in ejectment brought by the Eureka Consolidated Mining Company against the Richmond Mining Company of Nevada to recover the possession of a valuable mining property. The facts appearing in the findings, which, in the opinion of the court, are decisive of the case, may be stated as follows: —

In Ruby Hill, a spur of Prospect Mountain, in the Eureka Mining District, Nevada, is a zone of limestone, running in a northwesterly and southeasterly direction for a distance of a little more than a mile. Underlying this zone, on the southerly

side, is a well-defined unbroken foot-wall of quartzite, several hundred feet thick, and with a dip to the northward of about forty-five degrees. On the northerly side is an overhanging wall or belt of shale, also well defined and generally unbroken, which dips at an angle of about eighty degrees, and varies in thickness from less than an inch to seventy or eighty feet. At the easterly end of the zone these walls of quartzite and shale approach so closely as to be separated only by a seam less than an inch in thickness. From this point they diverge until on the surface, at the Eureka mine, they are about five hundred feet apart, and at the Richmond about eight hundred. At some depth below the surface they must come together if they continue to descend on the same angle, and, on some of the levels that have been worked, they are already found to be only from two to three hundred feet apart. This zone of limestone, at some time since its original deposit, has been broken, fissured, and disintegrated in all directions, so as to destroy, except in a few places of a few feet each, all traces of stratification. In this way its original structure and character became totally changed, and it was fitted to receive the extensive mineral deposits which are found in the numerous fissures, caverns, and cavities, and in the loose material of the rock, in various forms. Sometimes the mineral appears in a series or succession of ore-bodies, more or less closely connected; sometimes in apparently isolated chambers, and again in small bodies and in scattered grains. Although barren limestone intervenes, the mineral is so generally diffused throughout the zone as to render the whole mineralized matter metal-bearing rock. Bodies of ore appear in croppings on the surface at various points throughout the whole length of the zone, along which mining claims have been located. No mineral has been found either in the quartzite or the shale, and no considerable indications of any have been discovered within a mile north or south of the limestone.

In 1864 the miners of the district adopted a system of laws and regulations for their government. At that time provisions were made for ledge locations only, and in February, 1869, it was found necessary to add some amendments to meet the requirements of the district. This was done by a resolution which contained a preamble as follows: —

"Whereas, explorations have made it evident that the mineral in Eureka District is found more frequently in the form of deposits than in fissure-veins or ledges, and the laws of the district do not provide for the location of such deposits; and whereas, the deficiency in the law may give rise to expensive litigation, . . . the miners of Eureka District have adopted the following amendments to the old laws of the district."

The amendments were to the effect that deposit claims might be located; that a deposit claim should consist of a piece of ground one hundred feet square, and be designated as a "square;" that under certain circumstances such claims might be united; and that the owner should be entitled to all the mineral within his "ground to an indefinite depth."

On the 29th of May, 1869, after this amendment of the miners' laws, there was filed for record in the mining records of the district a "square" location of the Lookout claim, being four hundred feet northerly and southerly and two hundred feet easterly and westerly, that is to say, "one hundred feet on each side of the hill monuments for the centre, and . . . on the north end of Ruby Hill." On the 20th of September, 1869, notice of a ledge claim, called the Tip-Top, was filed for record in the same records, and on the same day, by other parties, another claim, the Richmond, for "seven locations of one hundred feet square," and seven locations of two hundred feet each, on the Richmond ledge, more particularly described "as located and situated adjoining the Champion claim on the south, and running north from said Champion, and adjoining the claim known as the Tip-Top ledge." Both the Tip-Top and Richmond claims included "all dips, spurs, and angles." The Tip-Top covered six hundred feet on the ledge and one hundred feet on each side. The Lookout adjoined the Richmond on the north.

The Eureka company, at some time before April 26, 1871, but at what precise date does not appear, became the owner of the Champion, Nuget, At Last, and Margaret claims. The Champion, At Last, and Margaret adjoined the Richmond and Lookout on the west. The Nuget adjoined the Champion, but its westerly line did not extend to the Richmond as originally located. The At Last adjoined the Champion, and the Marga-

ret the At Last. The Nuget extended to and across the line between the zone of limestone and the quartzite, and the distance across the four claims from the Nuget, on its southerly side, to the Margaret, on its northerly side, is seven hundred feet. It was not found in terms by the court below whether these claims extended the entire distance across the zone between the quartzite and the shale, but as it was found that the width of the zone, at the Eureka mine, was five hundred feet, and at the Richmond eight hundred, the fair inference is that the four claims belonging to the Eureka covered substantially the entire surface of the limestone between the end lines of the Champion extended.

On the 26th of April, 1871, the Eureka company conveyed to the Richmond a triangular piece of ground in the southwesterly corner of the Champion claim, described by metes and bounds, and in the deed the following provision was made: —

"But it is expressly understood and agreed that this deed does not convey or quitclaim or release any ores, precious metals, veins, lodes, or deposits, dips, spurs, or angles not embraced within the above-mentioned boundaries, and that the party of the second part [Richmond company] agrees and covenants, for itself, its successors and assigns, to make no claim hereafter to any ground or ore or metals therein embraced within the Nuget, Champion, Lookout, At Last, Margaret, and other mining claims and locations now owned and possessed by the party of the first part [Eureka company], except as to that contained within the limits of the above-described triangular piece of ground."

The Richmond company, in working its mine on the Richmond location, and in following the vein which cropped out on that location, got under the surface of the Lookout, which was then owned by the Eureka company. Controversies arose between the two companies as to their rights under their respective claims, which resulted, on the 16th of June, 1873, in a compromise, by which a dividing line was established, and the Eureka company agreed to convey to the Richmond all the mining ground and claim lying on the northwesterly side of this line, including the Lookout claim, and all veins, lodes, &c., and not to protest against any application by the Richmond com-

pany for a patent for the Richmond or other claims, provided such applications did not cross the line which was fixed. The Richmond company agreed to convey to the Eureka, with warranty against its own acts, all its right, title, and interest in and to the mining ground situated on the southeasterly side of the line, and in and to all ores, precious metals, veins, lodes, ledges, deposits, dips, spurs, or angles on, in, or under the land or mining ground, or any part thereof. Then follows in the agreement this clause: "It being the object and intention of the said parties hereto to confine the workings of the said party of the second part [Richmond company] to the northwesterly side of the said line continued downward to the centre of the earth, which line is hereby agreed upon as the permanent boundary line between the claims of the said parties." The line thus established was described as follows: "Commencing on the northeasterly corner of the Margaret mining ground or claim, . . . running thence in a southeasterly direction along the edge of said Margaret ground, the At Last ground, and the Champion ground, to a point marked W on the map; thence southerly along the edge of said Champion ground to the northeasterly corner of the Nuget ground, and thence along the edge of the Nuget ground to the northwesterly corner thereof." The point W was at the beginning of the triangular piece of ground conveyed by the Eureka to the Richmond in 1871, and from there to the Nuget ground the line was the boundary between that triangle and the Champion.

Deeds were executed to perfect the conveyances contemplated by this agreement, and on the 30th of April, 1874, the Richmond company got a patent for its Richmond claim as surveyed, "embracing a portion of the unsurveyed public domain, with the exclusive right of possession and enjoyment of all the land included within the exterior lines of said survey not herein expressly excepted from these presents, and of five hundred and one and one-half (501½) lineal feet of the said Richmond vein, lode, ledge, or deposit, for the length hereinbefore described throughout its entire depth, although it may enter the land adjoining; and also of all other veins, lodes, ledges, or deposits throughout their entire depths, the tops or apexes of

which lie inside the exterior boundary lines of said survey at the surface, extended downward vertically, although such veins, lodes, ledges, or deposits in their downward course may so far depart from a perpendicular as to extend outside the vertical side lines of said survey: *Provided*, that the right of possession hereby granted to such outside parts of said veins, lodes, ledges, or deposits shall be confined to such portions thereof as lie between vertical planes drawn downward through the end lines of said survey at the surface, so continued in their own direction that such vertical planes will intersect such exterior parts of said veins, lodes, ledges, or deposits."

Before this time, on the 16th of July, 1872, the Eureka company got a similar patent for the Champion claim, and afterwards, on the 12th of December, 1876, for the At Last and the Nuget. This suit was begun on the 27th of March, 1877, and on the 30th of the same month the Eureka obtained a similar patent for the Margaret.

The Richmond company is also the owner of the Arctic and Utah claims, the first filed for record Oct. 4, 1876, and the last, Jan. 7, 1877.

The particular mining ground in dispute is situated within the zone of limestone which has been described, and within planes drawn vertically down through the end lines of the Champion claim as patented to the Eureka company, and within planes drawn vertically down through the extreme points of the patented locations of the At Last and the Margaret claims, at right angles to the course or strike of the zone, and produced so as to follow its dip. The top or apex of the zone is within the surface lines of the patents to the Eureka company, and the zone dips at right angles to its course, and on such a dip extends under the surface of the Arctic and Utah claims. The property also lies on the southeasterly side of the compromise line agreed on in the settlement of June 16, 1873, extended vertically downward so as to follow the dip of the zone. The end lines of the surveys of the At Last and Margaret claims, as patented, are not parallel with each other.

The subjoined diagram represents the surface location of the

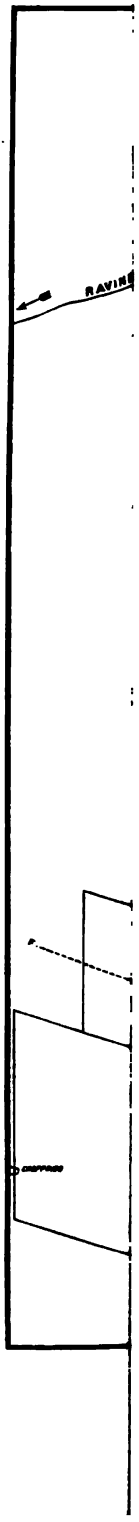
RAVINE

respective claims. The dividing line established by the agreement of June 16, 1873, is that marked X. W. R.

Mr. Samuel M. Wilson and *Mr. Thomas Wren* for the plaintiff in error.

Mr. Harry I. Thornton, contra.

MR. CHIEF JUSTICE WAITE, after stating the case, delivered the opinion of the court.

Upon the facts set forth in the preceding statement we have had no difficulty in reaching the conclusion that the judgment of the court below, sustaining the title of the Eureka company, was right. To our minds there cannot be a doubt that the compromise line was intended to fix permanently the boundary between the mining properties of the two companies at that point. The Richmond was to confine its workings to the north and west of the line, and the Eureka to the south and east. The Eureka had already got its patent for the Champion claim, which must have been older than the Richmond, for the Richmond location was bounded on the Champion, and by this patent was permitted to follow throughout their entire depth all veins, lodes, ledges, and deposits, the tops or apexes of which came to the surface within the lines of its survey. It is evident, also, that the Richmond company was seeking a similar patent for its Richmond claim, as by the terms of the settlement the Eureka was to withdraw its opposition, and in due time such a patent was obtained. The Eureka company also pushed forward its applications for patents to its other claims, and in the end got them all in the same form and with grants of the same privileges. In this way the companies secured from the United States the right to work the entire metal-bearing rock from the quartzite to the shale between the end lines of their patented surveys extended downwards and following the dip of the mineralized limestone zone. Their patents are all alike and their rights under them the same, save only that the Eureka is confined in its operations to the southeasterly side, and the Richmond to the northwesterly side of the agreed line.

In establishing this line it is to be presumed that the parties had in view the peculiar character of the property about which

they had been contending. They were settling, as between themselves, their rights to mining property and for the purpose of carrying on mining operations in that locality. They must have known perfectly well from the observations they had already made, that but a small part of the immense mineral deposit in that zone would probably be found between the exposed surface of the limestone and the quartzite immediately underneath. What they wanted was to fix as between themselves their rights in following what is called in the findings "the zone of metamorphosed limestone," so as to reach the anticipated deposits in the depths below. A compromise which only settled their controversies to what was directly under the surface would not have accomplished this. The Richmond wanted to be relieved from all embarrassments in getting under the Lookout, and it is to be presumed the Eureka wanted similar privileges under the surface for the Champion and its other claims. For this purpose the parties had to secure the necessary grants from the United States, and the fair inference from what was done is that the Eureka was not to be interfered with in getting what it could on the south and east of the line, and the Richmond was to have the same privilege on the north and west.

The language used is to be construed with reference to the peculiar property about which the parties were contracting. Whether the limestone was or was not within the meaning of the acts of Congress and the understanding of miners, a single vein, lode, or ledge, it was all mineralized or metal-bearing rock as distinguished from the barren walls in which it was enclosed. It descended into the earth on an angle, and unless parties in working it could follow its course as it went down they could not avail themselves to the full extent of the wealth it contained. When, therefore, we find parties contending about their rights to its possession and finally agreeing on a line of division between themselves which shall be continued downwards towards the centre of the earth, the conclusion is irresistible that the line was to be extended downwards through the property in its course towards the centre of the earth. Anything less than this would make their settlement a mere temporary expedient to get rid of a present difficulty

and leave their most important rights as much in dispute as ever. Such, we cannot believe, was the understanding.

This disposes of the case. The Richmond company is in no condition to dispute the validity of the Eureka's patents for the At Last and the Margaret because the end lines of the surveys are not parallel, as it has agreed with the Eureka, for a consideration, not to work in the limestone to the south and east of the compromise line. Upon the face of the patents the United States has granted to the Eureka the right to all veins, lodes, and deposits the tops or apexes of which lie on the inside of its surveys as patented, throughout their entire depth and wherever they may go, provided it keeps itself within the end lines of the surveys. The finding that the ground in dispute is within the end lines and that the apex is within the surface lines settles the rights of the parties between themselves as well under their patents as under their compromise agreement.

Judgment affirmed.

INDEX.

ACCOUNT. See *Church Property.*

ACKNOWLEDGMENT OF DEED. See *Mortgage*, 7.

ACTUAL BIAS, CHALLENGE FOR. See *Criminal Law*, 8.

ADMINISTRATOR. See *Minors, Property of*, 4.

ADMIRALTY. See *Practice*, 21, 22.

1. A ship-owner who, on the trial of the issue as to the cause of collision, contests all liability whatever, is not thereby precluded from claiming the benefit of the limitation of liability provided by sect. 4283 of the Revised Statutes. *The "Benefactor,"* 239.
2. After such trial, a decree declaring his ship to be in fault, and fixing the damages which the respective libellants sustained, is *res judicata*, and, until reversed, must stand as the basis for determining their *pro rata* share of the fund substituted by stipulation for the ship and freight. On filing his petition for limited liability, the libellants, until final action shall be had thereon, should be restrained from enforcing the decree. *Id.*
3. *Semble*, that the stipulation on filing that petition should be for the value of the ship after the collision, with the addition thereto of the freight then pending, it not appearing that her value was subsequently diminished. *Id.*
4. Proceedings for a limitation of liability, if not instituted until after a party has obtained satisfaction of his demand, are ineffectual as to him. A return of the money should not be compelled, nor, in general, should relief be granted, except upon condition of compensating the party for any costs and expenses to which he may have been subjected by reason of the delay of the ship-owner in claiming the benefit of the statute. *Id.*
5. The court, in reversing the decree of the Circuit Court, directs that court to proceed upon the petition for limited liability, and promulgates a rule that such a petition shall be hereafter filed in the Circuit Court when the case is there pending. *Id.*
6. The rule requiring a steamer to keep out of the way of a sailing-vessel is equally imperative upon the latter to keep her course; and

ADMIRALTY (*continued*).

where, by her unnecessary deviation therefrom, a collision is rendered unavoidable, the steamer is not liable therefor. *The "Illinois,"* 298.

7. A steam-tug making between seven and eight knots an hour was towing a ship by a hawser leading astern two hundred and seventy feet. The course which they were sailing crossed that of a schooner moving at the rate of from two to three knots an hour at a point just ahead of the tug, or between her and the ship. The schooner had a competent man at her wheel, and a lookout, both of whom did their duty faithfully. Her lights were properly set and brightly burning, and she kept her course about northeast. There was a pilot upon the ship, to whose orders the tug was subject. He, however, gave none. The tug did not slow her engine until the schooner was up to her, nor stop it until the schooner was about to strike the hawser. The course of the tug and the ship had then been changed about a point to the south. The ship struck the schooner on her port side, at about the fore-rigging, and sunk her. *Held*, that the ship and the tug, being in contemplation of law but one vessel under steam, were bound to keep out of the way of the schooner, and are liable for the damages which she sustained. *The "Civilta" and the "Restless,"* 699.
8. The form of decree sanctioned in *The Alabama and the Gamecock* (92 U. S. 695) approved. *Id.*
9. The court, upon the facts set forth in the opinion, holds that two vessels were in fault, in a collision whereby a boat towed by one of them was sunk, and affirms the decree of the court below apportioning the loss between them. *The "Connecticut,"* 710.
10. The court promulgates a rule declaring what matters the record shall contain in cases of admiralty and maritime jurisdiction, where the reviewing power of the court is limited to questions of law. *The "Adriatic,"* 730.

AFFIRM, MOTION TO. See *Practice*, 26.

AGENT. See *Principal and Agent.*

AMENDMENTS. See *Practice*, 1, 2, 15, 16.

ANTE-NUPTIAL SETTLEMENT.

An ante-nuptial settlement of lands, though made by the settler with the design of defrauding his creditors, will not be set aside in the absence of the clearest proof of his intended wife's participation in the fraud. *Prewit* v. *Wilson*, 22.

APPEAL.

1. Upon a petition filed by A., alleging that he was the owner of an undivided half of certain real estate which was not susceptible of division, and praying for a partition thereof by sale, the court below decreed that he was entitled to one-half of the property, and referred the case to a master, "to proceed to a partition according

APPEAL (*continued*).
to law, under the direction of the court." *Held*, that this is not a final decree, and that an appeal does not lie therefrom. *Green* v. *Fisk*, 518.
2. No appeal lies from the decree of the Circuit Court entered in accordance with the mandate of this court. *Humphrey* v. *Baker*, 736.
3. Where salvors united in a claim for a single salvage service, jointly rendered by them, the owner of the property is entitled to an appeal where the sum decreed exceeds $5,000, although the Circuit Court deemed it proper to apportion the recovery among the salvors according to their respective merits. *The "Connemara,"* 754.

APPELLEE, ASSIGNMENT OF ERRORS BY. See *Practice*, 28.

ARKANSAS. See *County Warrants; Railroad Companies, Subscriptions to the Capital Stock of*, 3.

ARMY, OFFICER OF THE. See *Officer of the Army or the Navy, Removal of.*

ASSETS, EQUITABLE MARSHALLING OF. See *Partnership*, 1, 2.

ASSIGNEE IN BANKRUPTCY. See *Bankruptcy*, 1; *Partnership*, 3.
The right to sue for and subject to the payment of his debts, effects fraudulently transferred by a party who was subsequently adjudicated a bankrupt, is vested alone in his assignees, and their failure to enforce it within the time prescribed by the bankrupt law does not transfer that right to his creditors. *Moyer* v. *Dewey*, 301.

ASSIGNMENT. See *Partnership*, 1, 2.

ASSISTANT TREASURER OF THE UNITED STATES. See *Internal Revenue Stamps*, 1.

ASSUMPSIT. See *Practice*, 15.

ATTACHMENT, WRIT OF. See *Jurisdiction*, 16.

AUDIT, BOARD OF. See *District of Columbia*, 2.

BAILMENT. See *Pledge.*

BANKRUPTCY. See *Assignee in Bankruptcy; Limitations, Statute of*, 1; *Partnership*, 1, 2.
1. In order to render a mortgage of real estate made by an insolvent debtor void as a preference and a fraudulent conveyance, within the meaning of the thirty-fifth section of the Bankrupt Act of March 2, 1867, c. 176 (14 Stat. 534), it must be affirmatively shown by his assignee in bankruptcy that the grantee had reasonable cause to believe that the grantor was insolvent at the time he executed the mortgage, and that it was made with intent to defeat the bankrupt law. *Barber* v. *Priest*, 293.
2. *Grant* v. *National Bank* (97 U. S. 80) approved. *Id.*
3. A discharge in bankruptcy is personal to the party to whom it is granted. *Moyer* v. *Dewey*, 301.

BIAS, CHALLENGE OF JUROR FOR. See *Criminal Law*, 3.

BIGAMY. See *Criminal Law*, 1–5.

BILLS OF EXCHANGE AND PROMISSORY NOTES.

Payment of a promissory note, executed at New Orleans March 26, 1862, will be enforced in lawful money where payments on account of the principal and interest were in that medium, and where, before the commencement of the suit, no claim was made that, by the agreement or the understanding of the parties, the term "dollars" was to be construed as meaning "Confederate dollars." *Cook* v. *Lillo*, 792.

BOND. See *Contracts*, 4; *Mortgage*, 8; *Municipal Bonds; Supersedeas.*

BOUNDARIES. See *Monuments.*

BRAIDS. See *Customs Duties*, 3.

BURDEN OF PROOF. See *Bankruptcy*, 1.

CALIFORNIA. See *Constitutional Law*, 28.

CAPTURED AND ABANDONED PROPERTY. See *Suit against the United States.*

CASES EXPLAINED, QUALIFIED, OR OVERRULED.

Anderson v. *Dunn*, 6 Wheat. 204. See *Kilbourn* v. *Thompson*, 168.

County of Moultrie v. *Savings Bank*, 92 U. S. 631. See *Railroad Company* v. *Falconer*, 821.

Meriwether v. *Garrett*, 102 U. S. 472. See *Wolff* v. *New Orleans*, 358.

Parsons v. *Jackson*, 99 U. S. 434. See *Railway Company* v. *Sprague*, 756.

The Kansas Indians, 5 Wall. 737. See *Pennock* v. *Commissioners*, 44.

CAUSES, REMOVAL OF. See *Injunction.*

1. The second clause of the second section of the act of March 3, 1875, c. 137 (18 Stat., part 3, p. 470), construed, and *held*, that, when in any suit mentioned therein there is a controversy wholly between citizens of different States, which can be fully determined as between them, then either one or more of the plaintiffs or the defendants actually interested in such controversy may, on complying with the requirements of the statute, remove the entire suit. *Barney* v. *Latham*, 205.
2. The right of removal depends upon the case disclosed by the pleadings when the petition therefor is filed, and is not affected by the fact that a defendant who is a citizen of the same State with one of the plaintiffs may be a proper, but not an indispensable, party to such a controversy. *Id.*
3. A final decree of the proper court dissolved an insolvent life insurance company of Missouri, and, as provided by the statutes in force, vested, for the use and benefit of creditors and policy-holders, its entire property in A., a citizen of that State and superintendent of her insurance department. *Held*, 1. That the statutes being in force when the charter of the company was granted, are, in legal

CAUSES, REMOVAL OF (*continued*).
effect, a part thereof. 2. That a suit having been previously instituted in a court of Louisiana by citizens of the latter State against the company, A. was, on being admitted a party thereto, entitled, by reason of his citizenship, to remove it to the Circuit Court of the United States. *Relfe* v. *Rundle*, 222.

4. A., a citizen of Louisiana, filed a bill in a court of that State, praying for an injunction to restrain B., who had recovered judgment against C. in that court, and sued out thereon a *fieri facias*, from levying the writ upon a tract of land whereof A. was the owner and actual possessor by a good and valid title from C. The judgment declares that an authentic act of mortgage, executed by C. and covering that and other tracts, was rendered executory, and that all the lands should be seized to satisfy it. The act was not reinscribed. A. was not a party to the judgment, nor was any demand made of, or notice given to, him. B. was a citizen of Mississippi, and filed a petition for the removal of the suit. *Held*, that the amount in controversy being sufficient, the suit was removable, under the act of March 3, 1875, c. 137, 18 Stat., pt. 3, p. 470. *Bondurant* v. *Watson*, 281.

5. The citizenship of the parties need not be averred in the petition for removal where it is shown by the record. *Id.*

6. A., a citizen of Massachusetts, commenced a suit, in a court of that State, against the executors of B., two of whom were citizens of Massachusetts and one a citizen of New York, to enforce a liability of the testator. The executors appeared and filed a joint answer. *Held*, that the controversy, not being divisible, nor wholly between citizens of different States, could not be removed into the Circuit Court of the United States. *Blake* v. *McKim*, 336.

7. The presumption that a State recognizes as binding on all her citizens and every department of her government an amendment to the Constitution of the United States, from the time of its adoption, and her duty to enforce it, within her limits, without reference to any inconsistent provisions in her own Constitution or statutes, is strengthened and becomes conclusive in this case, not only by the direct adjudication of the highest court of the State of Delaware that her Constitution had been modified by force of the amendments to the Constitution of the United States, but by the entire absence of any statutory enactment, since their adoption, indicating that she does not recognize, in the fullest legal sense, their effect upon her Constitution and laws. Where, therefore, a negro, indicted in one of her courts for a felony, presented a petition alleging that persons of African descent were, by reason of their race and color, excluded by those laws from service on juries, and praying that the prosecution against him be removed to the Circuit Court of the United States, — *Held*, that the prayer of the petition was properly denied. *Neal* v. *Delaware*, 370.

8. Had the State, since the adoption of the Fourteenth Amendment, enacted any statute in conflict with its provisions, or had her judicial

CAUSES, REMOVAL OF (*continued*).
tribunals repudiated it as a part of the supreme law of the land, or declared that the acts passed to enforce it were inoperative and void. there would have been just ground to hold that the case was one em braced by sect. 641 of the Revised Statutes, and, therefore, removable into the Circuit Court. *Id.*

9. A party to a suit, who, under the act of March 3, 1875, c. 137 (18 Stat., pt. 3, p. 470), was entitled to its removal from the State court wherein it was brought, filed in due time his petition and the requisite bond, and prayed for such removal to the Circuit Court of the United States for the proper district. His petition was denied. *Held*, that, on his entering in the Circuit Court, within the period prescribed by that act, the transcript of the record, that court acquired jurisdiction of the suit, and that all subsequent proceedings of the State court therein are absolutely void. *Kern* v. *Huidekoper*, 485.

10. A sheriff, to whom was directed a *fieri facias* sued upon a judgment against A., levied the writ upon certain goods and chattels, for which replevin was brought in a State court against him by B., a non-resident of the State, claiming to be the owner of them. *Held*, that there is nothing in the character of the suit which precludes its removal by B. to the Circuit Court. *Id.*

11. A suit instituted to try the title of a party to a State office, whereof he is the incumbent, and whereto he was, by the constituted authorities of the State, duly declared to be elected pursuant to her laws, cannot be removed from one of her courts into the Circuit Court of the United States on his petition, setting forth that, by reason of bribery and threats, colored persons who were qualified to vote at the election, and who would have voted for him, were deterred from voting, and that the returning board rejected the votes of the parishes where such illegal practices prevailed. *Dubuclet* v. *Louisiana*, 550.

12. A township in Illinois and a taxpayer thereof, on behalf of himself and other resident tax-payers, filed their bill in a court of that State against certain State, county, and township officers and the "unknown owners and holders" of certain township bonds, each payable in the sum of $1,000. The bill prayed for an injunction to restrain the levy and collection of a tax to pay the principal of the bonds or any interest thereon. A., a citizen of another State, was the owner of all of them. *Held*, that he was entitled, under the act of March 3, 1875, c. 137 (18 Stat., pt. 3, p. 470), to remove the suit to the Circuit Court of the United States. *Harter* v. *Kernochan*, 562.

13. A decree was rendered by the State court against A. by default, although he was not summoned, nor served with a copy of the bill or any notice of the pendency of the suit. On his application within the prescribed period the decree was set aside, and he thereupon filed his petition to remove the cause. *Held*, that it was filed in due time. *Id.*

14. Under the act of March 3, 1875, c. 137 (18 Stat., pt. 3, p. 470), a writ of error is the proper mode for reviewing here the order of the Cir-

CAUSES, REMOVAL OF (*continued*).
cuit Court remanding an action at law removed thereto from a State court, and it lies without regard to the value of the matter in dispute. *Babbitt* v. *Clark*, 606.
15. The removal should not be granted, if the petition therefor be not filed in the State court before or at the term at which the action could be first tried, and before the trial thereof. Where, therefore, a cause, by the practice of the State court, stood for trial upon the issue raised by the petition and answer, the rule-day having expired without filing a reply, and the plaintiff then filed in the clerk's office a reply, without leave or notice, and the cause was continued until the ensuing term, when, before the cause was called for trial, the defendant presented his application for its removal, — *Held*, that the application should not have been granted, and the order of the Circuit Court remanding the cause was proper. *Id.*

CAUSES, SUBMISSION OF. See *Practice*, 1–3.

CHARTER. See *Municipal Bonds*, 17; *Taxation*, 1, 2.
A final decree of the proper court dissolved an insolvent life insurance company of Missouri, and, as provided by the statutes in force, vested, for the use and benefit of creditors and policy-holders, its entire property in A., a citizen of that State and superintendent of her insurance department. *Held*, that the statutes being in force when the charter of the company was granted, are, in legal effect, a part thereof. *Relfe* v. *Rundle*, 222.

CHURCH PROPERTY.
1. Pending a suit brought to control the affairs of a church and obtain possession of its property by a portion of the congregation against its founder and another portion, each claiming to be the lawfully elected trustees, every member who desired to worship at the church was permitted to do so, and it was kept exclusively for church purposes. A decree passed for the complainants. *Held*, that they were not entitled to recover for the use and occupation of the church premises, as no claim therefor was made in their bill, and the defendants derived no pecuniary advantage therefrom. *Bouldin* v. *Alexander*, 330.
2. The referee having found that money had been collected on behalf of the church by the pastor, who held a deed of trust on the church property to secure notes payable to him, this court directs that he be allowed by the court below to produce them in order that the money be applied as a credit thereon, or, upon his failure to do so, or to satisfactorily account for them, that a decree be entered against him for the money. *Id.*

CIGAR RIBBONS. See *Customs Duties*, 3.

CITY. See *Taxation*, 5–7.

COLLATERAL SECURITY. See *National Banks*, 1, 2.

COLLECTOR OF INTERNAL REVENUE. *See Internal Revenue Stamps*, 2.

COLLISION. See *Admiralty*.

COLORED SCHOOLS FOR THE DISTRICT OF COLUMBIA, TRUSTEES OF. See *District of Columbia*, 1.

COMITY. See *Louisiana*, 4; *Minors, Property of*, 1.

COMMERCE.

1. Letters-patent granted by the United States do not exclude from the operation of the tax or license law of a State the tangible property in which the invention or discovery is embodied. *Webber* v. *Virginia*, 344.
2. A statute of Virginia requires that the agent for the sale of articles manufactured in other States must first obtain a license, for which he is required to pay a specific tax for each county in which he sells or offers to sell them, while the agent for the sale of articles manufactured in that State, if acting for the manufacturer, is not required to obtain a license or pay any license tax. *Held*, that the statute is in conflict with the commerce clause of the Constitution of the United States, and void. *Id.*
3. Commerce among the States is not free whenever a commodity is, by reason of its foreign growth or manufacture, subjected by State legislation to discriminating regulations or burdens. *Id.*
4. *Welton* v. *State of Missouri* (91 U. S. 275) and *County of Mobile* v. *Kimball* (102 id. 691) cited and approved. *Id.*

COMMERCIAL PAPER, LIABILITY OF, INDORSER OF. See *Florida*, 3.

COMMISSIONER OF INTERNAL REVENUE. See *Internal Revenue*, 2; *Internal Revenue Stamps*, 1.

COMPLAINANT, DEATH OF THE. See *Practice*, 3.

CONDITION PRECEDENT. See *Municipal Bonds*, 19; *Railroad Companies, Subscriptions to the Capital Stock of*, 10.

CONGRESSIONAL TOWNSHIPS. See *Constitutional Law*, 15.

CONSENT DECREE. See *Railroad Companies, Subscriptions to the Capital Stock of*, 5.

CONSIGNOR. See *Pledge*.

CONSTITUTIONAL LAW. See *Commerce; Florida; Municipal Bonds*, 19; *Railroad Companies, Subscriptions to the Capital Stock of*, 11.

1. A contract between a State and a party, whereby he is to perform certain duties for a specific period at a stipulated compensation, is within the protection of the Constitution; and on his executing it he is entitled to that compensation, although before the expiration of the period the State repealed the statute pursuant to which the contract was made. *Hall* v. *Wisconsin*, 5.

CONSTITUTIONAL LAW (*continued*).

2. If the provisions of a statute which are unconstitutional be so connected with its general scope that, should they be stricken out, effect cannot be given to the legislative intent, the other provisions must fall with them. *Allen* v. *Louisiana*, 80.
3. K., for refusing to answer certain questions put to him as a witness by the House of Representatives of the Congress of the United States, concerning the business of a real-estate partnership of which he was a member, and to produce certain books and papers in relation thereto, was, by an order of the House, imprisoned for forty-five days in the common jail of the District of Columbia. He brought suit to recover damages therefor against the sergeant-at-arms, who executed the order, and the members of the committee, who caused him to be brought before the House, where he was adjudged to be in contempt of its authority. *Held*, that, although the House can punish its own members for disorderly conduct, or for failure to attend its sessions, and can decide cases of contested elections and determine the qualifications of its members, and exercise the sole power of impeachment of officers of the government, and may, where the examination of witnesses is necessary to the performance of these duties, fine or imprison a contumacious witness, — there is not found in the Constitution of the United States any general power vested in either House to punish for contempt. *Kilbourn* v. *Thompson*, 168.
4. An examination of the history of the English Parliament and the decisions of the English courts shows that the power of the House of Commons, under the laws and customs of Parliament to punish for contempt, rests upon principles peculiar to it, and not upon any general rule applicable to all legislative bodies. *Id.*
5. The Parliament of England, before its separation into two bodies, since known as the House of Lords and the House of Commons, was a high court of judicature, — the highest in the realm, — possessed of the general power incident to such a court of punishing for contempt. On its separation, the power remained with each body, because each was considered to be a court of judicature and exercised the functions of such a court. *Id.*
6. Neither House of Congress was constituted a part of any court of general jurisdiction, nor has it any history to which the exercise of such power can be traced. Its power must be sought alone in some express grant in the Constitution, or be found necessary to carry into effect such powers as are there granted. *Id.*
7. The court, without affirming the non-existence of such a power in any case other than those already specified, decides that it cannot be exercised by either House in aid of an inquiry into the private affairs of a citizen. *Id.*
8. The Constitution divides the powers of the government which it establishes into the three departments, — the executive, the legislative, and the judicial, — and unlimited power is conferred on no department or officer of the government. It is essential to the successful work-

CONSTITUTIONAL LAW (*continued*).
ing of the system that the lines which separate those departments shall be clearly defined and closely followed, and that neither of them shall be permitted to encroach upon the powers exclusively confided to the others. *Id.*

9. That instrument has marked out, in its three primary articles, the allotment of power to those departments, and no judicial power, except that above mentioned, is conferred on Congress or on either branch thereof. On the contrary, it declares that the judicial power of the United States shall be vested in one Supreme Court and such inferior courts as the Congress may from time to time ordain and establish. *Id.*

10. The resolution of the House, under which K. was summoned and examined as a witness, directed its committee to examine into the history and character of what was called "the real-estate pool" of the District of Columbia; and the preamble recited, as the grounds of the investigation, that Jay Cooke & Co., who were debtors of the United States, and whose affairs were then in litigation before a bankruptcy court, had an interest in the pool or were creditors of it. The subject-matter of the investigation was judicial, and *not* legislative. It was then pending before the proper court, and there existed no power in Congress, or in either House thereof, on the allegation that an insolvent debtor of the United States was interested in a private business partnership, to investigate the affairs of that partnership, and consequently no authority to compel a witness to testify on the subject. *Id.*

11. It follows that the order of the House, declaring K. guilty of a contempt of its authority, and ordering his imprisonment by the sergeant-at-arms, is void, and affords the latter no protection in an action by K. against him for false imprisonment. *Id.*

12. *Anderson* v. *Dunn* (6 Wheat. 204) commented on, and some of the reasoning of the opinion overruled and rejected. *Id.*

13. The provision of the Constitution, that, for any speech or debate in either House, the members shall not be questioned in any other place, exempts them from liability elsewhere for any vote, or report to or action in their respective Houses, as well as for oral debate. Therefore the plea of the members of the committee that they took no part in the actual arrest and imprisonment of K., and did nothing in relation thereto beyond the protection of their constitutional privilege, is, so far as they are concerned, a good defence to the action. *Id.*

14. This court concurs in opinion with the Supreme Court of Illinois that sect. 5 of art. 9 of the Constitution of that State of 1848 (*supra*, p. 257) imposes a limitation on the power of the legislature to authorize taxation by the municipal corporations or the political subdivisions of the State. *Weightman* v. *Clark*, 256.

15. A congressional township is by the laws of Illinois merely a corporation for school purposes. It cannot, therefore, subscribe for stock in a railroad company, and issue its bonds in payment, nor levy a

CONSTITUTIONAL LAW (*continued*).
tax upon persons and property within its jurisdiction, to aid in building railroads. *Id.*
16. As long as a city exists, laws are void which withdraw or restrict her taxing power so as to impair the obligation of her contracts made upon a pledge expressly or impliedly given that it shall be exercised for their fulfilment. *Von Hoffman* v. *City of Quincy* (4 Wall. 535) cited on this point, and approved. *Wolff* v. *New Orleans*, 358.
17. The adoption of the Fifteenth Amendment rendered inoperative a provision in the then existing Constitution of a State, whereby the right of suffrage was limited to the white race. *Neal* v. *Delaware*, 370.
18. Therefore, a statute confining the selection of jurors to persons possessing the qualifications of electors is enlarged in its operation so as to embrace all those who, by the Constitution of the State, as modified by that amendment, are entitled to vote. *Id.*
19. The presumption should be indulged, in the first instance, that the State recognizes as binding on all her citizens and every department of her government an amendment to the Constitution of the United States, from the time of its adoption, and her duty to enforce it, within her limits, without reference to any inconsistent provisions in her own Constitution or statutes. *Id.*
20. In this case, that presumption is strengthened and becomes conclusive, not only by the direct adjudication of the highest court of the State of Delaware that her Constitution had been modified by force of the amendments to the Constitution of the United States, but by the entire absence of any statutory enactment, since their adoption, indicating that she does not recognize, in the fullest legal sense, their effect upon her Constitution and laws. *Id.*
21. Had the State, since the adoption of the Fourteenth Amendment, enacted any statute in conflict with its provisions, or had her judicial tribunals repudiated it as a part of the supreme law of the land, or declared that the acts passed to enforce it were inoperative and void, there would have been just ground to hold that the prayer of the prisoner for the removal of the prosecution against him presented a case embraced by sect. 641 of the Revised Statutes. *Id.*
22. The exclusion, because of their race and color, of citizens of African descent from the grand jury that found, and from the petit jury that was summoned to try, the indictment, if made by the jury commissioners, without authority derived from the Constitution and laws of the State, was a violation of the prisoner's rights, under the Constitution and laws of the United States, which the trial court was bound to redress; and the remedy for any failure in that respect is ultimately in this court upon writ of error. *Id.*
23. The court reaffirms the doctrines announced in *Strauder* v. *West Virginia* (100 U. S. 303), *Virginia* v. *Rives* (id. 315), and *Ex parte Virginia* (id. 339). *Id.*

CONSTITUTIONAL LAW (*continued*).

24. Under the Constitution of Illinois of 1848, a bill passed by both Houses of the legislature became a law when it was approved and signed by the governor of the State within ten days after its presentation to him; and this, notwithstanding the fact that, when the bill was so approved and signed, the legislature had adjourned *sine die*. *Seven Hickory* v. *Ellery*, 423.

25. A statute of Illinois, legalizing elections held by the voters of a county on the question of issuing negotiable bonds of the county, in aid of certain railroad companies, and authorizing, on conditions therein named, all the townships in counties where the township organization had been adopted, lying on or near to the line of a specified railroad, to subscribe to the stock of the railroad company, and issue negotiable bonds therefor, is a public act, and does not conflict with section 23 of article 3 of the Constitution of 1848, which provides that "no private or local law, which may be passed by the General Assembly, shall embrace more than one subject, and that shall be expressed in the title." *Unity* v. *Burrage*, 447.

26. A general statute of Tennessee required the county courts, when thereunto authorized by a popular vote at an election held for the purpose, to subscribe for stock in a railroad company. A special statute was subsequently passed, which, without requiring the submission of the question of subscription to a popular vote, conferred power on the county courts of the counties on the line of a particular railroad to make, and on the company to receive, a subscription for its stock. *Held*, that the special statute is not in violation of the provisions of sect. 8, art. 1, or of sect. 7, art. 11, of the Constitution of Tennessee of 1834, *supra*, p. 525. *County of Tipton* v. *Locomotive Works*, 523.

27. Neither the act of the legislature of Illinois, entitled "An Act to incorporate the Illinois Southeastern Railway Company," approved Feb. 25, 1867, authorizing townships to make donations to that company, nor the amendatory act of Feb. 24, 1869, authorizing the issue of township bonds, for the amount so donated, is in conflict with the Constitution of the State. *Harter* v. *Kernochan*, 562.

28. The statute of California, approved April 15, 1880, limiting to four years the terms of office of the commissioners required by the act of Congress of June 30, 1864, c. 184 (13 Stat. 325), "to be appointed by the executive of California," to manage the Yosemite Valley and Mariposa Big Tree Grove, is not repugnant to that act, and may be followed by him in making his appointments. *Ashburner* v. *California*, 575.

29. The act of the General Assembly of Missouri, approved March 18, 1871, which provides that "it shall be lawful for the council of any city, or the trustees of any incorporated town, to purchase lands, and to donate, lease, or sell the same to any railroad company upon such terms and conditions as such board may deem proper, and for the purposes of assisting and inducing such railroad company to locate and build machine-shops or other improvements upon such lands,

CONSTITUTIONAL LAW (*continued*).

and, for such purposes, to levy taxes upon the taxable property of such city or town, and to borrow money and to issue the bonds of such city or town for such purposes: *Provided*, a majority of the qualified voters of such town or city, at a special election to be held therein, shall assent to such purchase and donation," is void, it being in conflict with sect. 14 of art. 11 of the Constitution adopted in 1865, which declares that "the General Assembly shall not authorize any county, city, or town to become a stockholder in, or to loan its credit to, any company, association, or corporation, unless two-thirds of the qualified voters of such county, city, or town, at a regular or special election to be held therein, shall assent thereto." *Jarrolt* v. *Moberly*, 580.

30. The provision which prohibits the creation of an indebtedness by a direct loan of municipal credit does not permit the indirect use of such credit for the same purpose. *Id.*

31. In the absence of constitutional restraint, the legislature may pass special laws for the sale or investment of the estates of infants or other persons who are not *sui juris*. *Hoyt* v. *Sprague*, 613.

32. The act of the legislature of Louisiana, approved April 20, 1871, under which certain bonds were issued to the New Orleans, Mobile, and Chattanooga Railroad Company, is in conflict with the constitutional amendment of 1870, which declares "that, prior to the first day of January, 1890, the debt of the State shall not be so increased as to exceed twenty-five millions of dollars," inasmuch as it authorized the creation of a new debt on a new consideration in excess of the prescribed amount. *Williams* v. *Louisiana*, 637.

33. *Williams* v. *Louisiana* (*supra*, p. 637) reaffirmed. *Durkee* v. *Board of Liquidation*, 646.

34. After the bonds in question were issued, the General Assembly of Louisiana passed an act creating the Board of Liquidation, and authorizing it to convert and fund all valid outstanding claims against the State. A subsequent act declared the bonds to be void, and forbade the board to fund them. *Held*, that the act withdraws from the board all authority to act in the premises, and that the obligation of no contract is thereby impaired, inasmuch as there was no previous acceptance by bondholders of the proposition to fund, and no consideration had passed. *Id.*

35. A bill designated as "House Bill No. 231," and having for its title, "An Act to amend an act entitled 'An Act to incorporate the Illinois Grand Trunk Railway,'" regularly passed the House of Representatives of the General Assembly of Illinois. In its passage through the Senate "Illinois" was dropped from the title, and in the message of the House to the Senate and of the Senate to the House, reporting its passage by those bodies respectively, "Illinois" was left out of the title, but the designation as House Bill No. 231 was retained. The journals show no amendment to the title. The bill as above entitled was signed by the presiding officer of each

CONSTITUTIONAL LAW (*continued*).

House. The Constitution of Illinois then in force provides that "every bill shall be read on three different days in each House, . . . and every bill having passed both Houses shall be signed by the speakers of their respective Houses." *Held*, that the act was duly and constitutionally passed. *Walnut* v. *Wade*, 683.

36. The act of the legislature of Nebraska approved Feb. 2, 1875, entitled "An Act authorizing School District Number 56, of Richardson County, to issue bonds for the purpose of erecting a school building, procuring a site therefor, and for setting apart a fund to pay the same," is void, it being in conflict with sect. 1, art. 8, of the Constitution of that State of 1866–67, which declares that "the legislature shall pass no special act conferring corporate powers." *School District* v. *Insurance Company*, 707.

37. A State statute abolishing imprisonment for debt does not, within the meaning of the Constitution, impair the obligation of contracts which were entered into before its enactment. *Penniman's Case*, 714.

CONTEMPT, POWER OF THE HOUSE OF REPRESENTATIVES TO PUNISH FOR. See *Constitutional Law*, 1–13.

CONTINUANCE. See *Practice*, 3.

CONTRACTS. See *Constitutional Law*, 16, 34; *District of Columbia*, 1; *Limitations, Statute of*, 2; *Louisiana*, 4; *Practice*, 11, 12, 29.

1. A contract between a State and a party, whereby he is to perform certain duties for a specific period at a stipulated compensation, is within the protection of the Constitution; and on his executing it he is entitled to that compensation, although before the expiration of the period the State repealed the statute pursuant to which the contract was made. *Hall* v. *Wisconsin*, 5.

2. A party to a contract, the making of which, although prohibited by law, is not *malum in se*, may, while it remains executory, rescind it and recover money by him advanced thereon to the other party who had performed no part thereof. *Spring Company* v. *Knowlton*, 49.

3. The trustees of A., a corporation which was organized under the act of New York of Feb. 17, 1848, for the formation of corporations for manufacturing purposes, and acts amendatory thereof, passed a resolution increasing its capital stock, which was $1,000,000, by the addition of $200,000, allowing each stockholder to take one share of the new stock for every five shares of the original stock which he held, and providing that on his paying in instalments $80 on each share of $100, a certificate as for full-paid stock should be issued to him by the company, and on his failure to pay an instalment of $20 per share on or before a specified date his claim to the new stock should be forfeited, and such forfeited shares divided ratably among the other stockholders who had paid that instalment. A subscription agreement binding the subscribers thereto to take stock and pay $80

CONTRACTS (*continued*).

per share in instalments as they should be called for by the company, and, on failure to pay any instalment, to submit to the forfeiture of all sums theretofore paid, was prepared and signed by B., who, being then a trustee of A. and its vice-president, was an active promoter of the scheme for the increase of the stock. He paid but one instalment of twenty per cent on his new stock, and the latter was, by a resolution of the company, declared to be forfeited. The capital stock of the company was afterwards reduced to its original amount, and, to refund the payments made on the new stock withdrawn, bonds were issued. None of them were tendered to or demanded by B. On A.'s refusing to pay him the amount of that instalment, he brought suit therefor. *Held*, that he was entitled to recover. *Id.*

4. A bond executed Dec. 22, 1871, to an insurance company by B., its agent, and conditioned for the faithful discharge of his duties, contains a provision that it shall continue and remain in force so long as he "shall be the agent of said company, whether under his existing appointment or any future one," and until all liabilities on his part, by reason of such agency, "shall have been discharged." Dec. 23, 1873, a new contract entered into between the company and B., whereby the latter was appointed agent, changes the rate of his commissions and contains the following clause: "This contract abrogates all former ones, so far as new business is concerned." *Held*, that the bond of Dec. 22, 1871, was not abrogated thereby. *Boogher* v. *Insurance Company*, 90.

5. Contracts created by, or entered into under, the authority of statutes are to be interpreted according to the language used in each particular case to express the obligation assumed. *Railroad Companies* v. *Schutte*, 118.

6. A party to a contract, who has performed part of it according to its terms, and is prevented from completing it by the failure of the other party, is entitled to compensation for the work performed. *Chicago* v. *Tilley*, 146.

7. Where there is no contract, express or implied, between the parties, usage or custom cannot make one. *Tilley* v. *County of Cook*, 155.

8. A county and a city within its limits proposed to erect public buildings, the portion appropriated to the uses of each to be paid for by them respectively. They jointly offered a premium for plans. A. furnished one, and received the promised compensation. There was no further contract between the parties. The city and county severally adopted a resolution selecting his plan, subject to such modifications as might thereafter be determined upon if his estimate as to the cost of construction should be verified. He brought suit against them to recover five per cent of the estimated cost of the buildings. *Held*, 1. That he was not entitled to recover. 2. That evidence of the value of his services in making the estimate was properly excluded, inasmuch as he failed to show that they had been rendered at the instance of the defendants. *Id.*

CONTRACTS (*continued*).

9. A consul-general of a foreign government, residing in this country, entered into a contract, whereby, in consideration of a stipulated percentage, he agreed to use his influence in favor of a manufacturing company here with an agent of that government sent to examine and report in regard to the purchase of arms for it. By exerting his influence, sales of arms were made by the company to that government, and he brought suit to recover the percentage. *Held*, that, in a court of the United States there can be no recovery on the contract. *Oscanyan* v. *Arms Company*, 261.
10. The contract entered into July 16, 1868, by the Union Pacific Railroad Company, by direction of the executive committee of the board of directors, with Godfrey and Wardell (*supra*, p. 652), which the latter assigned, without consideration, to a new company, in which a majority of the stock was taken by six directors of the old company, declared to be fraudulent and void. *Wardell* v. *Railroad Company*, 651.
11. The deputy-governor of the branch at Milwaukee of "The National Home for Disabled Volunteer Soldiers" was not permitted by its by-laws to contract for or receive, beyond his stated salary, compensation for services, which, at the request of the building committee of the board of managers, he rendered in the erection of the new buildings for the home at that place. *Yates* v. *National Home*, 674.
12. A., a railroad company, in the execution of its contract with the government, carried the mails from P. to F., the route being partly over its own road and partly over a portion of the road of company B., which also had a contract for carrying the mails over its entire line. After the passage of the act of March 3, 1873, c. 231, the Post-Office Department made frequent adjustments of the amount due to the respective companies, which was from time to time received without protest or objection. B. having received the amount due for conveying all the mails over its road, although over a part of it a portion of them had been carried by A. under its contract, the latter brought suit against the United States to recover compensation for the portion so carried. *Held*, that A.'s acquiescence in the adjustments precluded the maintenance of the suit. *Railroad Company* v. *United States*, 703.
13. The contracts entered into by the United States and the Pacific Mail Steamship Company, for carrying the mails by the latter between San Francisco and certain Asiatic ports, considered. *Held*, 1. That the company has no claim to compensation other than sea postage for carrying them in vessels which had not been accepted by the Postmaster-General. 2. That it is entitled to recover, under the contract of Aug. 23, 1873, for services performed, pursuant to its terms, in vessels which he had, under the contract of Oct. 16, 1866, accepted. 3. That the annulment of the contract by the act of March 3, 1875, c. 128, does not affect the company's claim for such services on a voyage commenced before that date. *Steamship Company* v. *United States*, 721.

CONTRACTS (*continued*).

14. A., the executor of the deceased member of a firm, entered into a contract in writing with B., the surviving partner, whereby he sold and transferred to the latter all the interest of the testator in the effects of the partnership for a valuable consideration, consisting in part of lands. The contract also stipulated that B. should, within five years from its date, if A. so desired, "purchase back" the lands at a certain price in cash. *Held*, that the respective rights and obligations of the parties under the contract were fixed when A., within the five years, duly notified B. to make the purchase at the expiration of them, and that, on tendering to B. within a reasonable time thereafter a proper deed for the lands, A. could maintain a suit for the stipulated price. *Brown* v. *Slee*, 828.

CONVEYANCE. See *Deed*.

CORPORATION, DIRECTORS OF. See *Contracts*, 10.

1. The directors of a corporation are subject to the obligations which the law imposes upon trustees and agents. They cannot, therefore, with respect to the same matters, act for themselves and for it, nor occupy a position in conflict with its interests. *Wardell* v. *Railroad Company*, 651.
2. Hence, a court will refuse to give effect to arrangements by directors of a railroad company to secure, at its expense, undue advantages to themselves, by forming, as an auxiliary to it, a new company, with the understanding that they or some of them shall become stockholders in it, and then that valuable contracts shall be given to it by the railroad company, in the profits of which they, as such stockholders, shall share. *Id.*

CORPORATIONS. See *Constitutional Law*, 14, 15.

COSTS. See *Admiralty*, 2.

Costs are not payable out of the fund in controversy. *National Bank* v. *Whitney*, 99.

COUNTY WARRANTS.

1. A county in Arkansas, when sued on its warrants by a *bona fide* holder thereof for value, may set up any defence to which they were subject in the hands of the original payee. *Wall* v. *County of Monroe*, 74.
2. The same rule is applicable where they are issued to the payee, in lieu of others in his favor cancelled by the county court, after it found them to be just claims against the county. *Id.*
3. Neither the order directing the issue of the original warrants, nor that cancelling them and substituting others in their place, has the force of a judicial determination concluding either the payee of them or the county. *Id.*
4. Such warrants are not negotiable paper in the sense of the law merchant. *County of Ouachita* v. *Wolcott*, 559.
5. Where the county court has fixed, by its order, a time for calling them in for redemption, classification, or other lawful purpose, the holder

COUNTY WARRANTS (*continued*).
who neglects or refuses to present them, as required by the order, and the notice thereof given, conformably to the statute, has no right of action against the county to enforce their payment. *Id.*

COUPONS.
1. The fact that coupons are made payable at a particular place does not make it necessary to aver or prove a presentation of them for payment there. *Walnut* v. *Wade*, 683.
2. Coupons bear interest from their maturity, and, when severed from the bonds, are negotiable, and pass by delivery. *Id.*
3. Overdue and unpaid interest coupons do not of themselves make the bond to which they are attached dishonored paper. *Cromwell* v. *County of Sac* (96 U. S. 51) cited and approved, and *Parsons* v. *Jackson* (99 id. 434) distinguished. *Railway Company* v. *Sprague*, 756.

COURSES AND DISTANCES. See *Monuments.*

COURT AND JURY. See *Criminal Law*, 5; *Practice*, 4, 5, 25, 30; *Principal and Agent.*

COURT, FINDING OF FACT BY THE. See *Practice*, 6–9.
A pleading which would be cured by verdict is good after a finding by the court to which the issue was submitted by the stipulation of the parties. *Adam* v. *Norris*, 591.

COURT, TRIAL BY. See *Jury, Waiver of.*

CREDITORS. See *Ante-nuptial Settlement; Assignee in Bankruptcy; Deed; Partnership*, 3, 4; *Railroad Companies, Subscriptions to the Capital Stock of*, 4; *Wife, Settlement of Lands upon.*

CREDITORS, COMPOSITION WITH. See *Limitations, Statute of*, 1.

CRIMINAL LAW. See *Constitutional Law*, 19–23.
1. On an indictment for bigamy, the first marriage may be proved by the admissions of the prisoner, and it is for the jury to determine whether what he said was an admission that he was actually and legally married according to the laws of the country where the marriage was solemnized. *Miles* v. *United States*, 304.
2. As long as the fact of his first marriage is contested, the second wife is an incompetent witness. Where it has by other evidence been duly established to the satisfaction of the court, she may be admitted to prove her marriage with him. *Id.*
3. On the trial of such an indictment, the United States challenged a juror for "actual bias." Three triers, appointed by the court conformably to the law of Utah, where the indictment was found, tried the challenge, and declared it to be true. *Held*, that their decision being by that law final, he was properly excluded from the panel. *Id.*
4. Against the objection of the prisoner, jurors were interrogated by the United States as to their belief that the practice of polygamy is in

CRIMINAL LAW (*continued*).
obedience to the divine will and command. *Held*, that the objection was properly overruled. *Id.*
5. In a criminal case, the evidence upon which the jury are justified in finding a verdict of guilty must be sufficient to satisfy them of the prisoner's guilt beyond a reasonable doubt. *Held*, that the instruction by the court of original jurisdiction upon this point (*supra*, p. 309) furnishes him no just ground of exception. *Id.*
6. Upon the showing made in this case, the motions to quash the indictment and the panels of jurors should have been sustained. *Neal* v. *Delaware*, 370.

CURIA ADVISARE VULT. See *Practice*, 3.

CUSTOM. See *Contracts*, 7.

CUSTOMS DUTIES.
1. In 1873, A. imported certain manufactured shirtings, not made up, composed of linen and cotton, the latter being the material of chief value and largely predominating. *Held*, that they were, within the meaning of the tariff acts, manufactures of cotton, and, as such, subject to the duty imposed by the first section of the act of March 3, 1865, c. 80. 13 Stat. 491. *Fisk* v. *Arthur*, 431.
2. The ruling in *Solomon* v. *Arthur* (102 U. S. 208), that goods made of mixed materials were not dutiable under the mixed-material clause of the twenty-second section of the act of March 2, 1861, c. 192 (12 Stat. 192), if they came properly within any other description found in the tariff acts, reaffirmed. *Id.*
3. Laces, cigar ribbons, galloons, and braids made substantially of silk, although cotton forms a part thereof, were subject to a duty of sixty per cent *ad valorem*, under sect. 8 of the act of June 30, 1864, c. 171. 13 Stat. 181. *Swan* v. *Arthur*, 597.
4. A. imported certain pictures painted by hand on porcelain. When they are framed or in any manner set, the porcelain, which, being manufactured only as a ground upon which to obtain a good surface to paint, and not for any independent use, is obscured from view, constitutes of itself no article of chinaware, and forms no material part of their value. *Held*, that they are subject to the duty of ten per cent *ad valorem* prescribed by schedule M of sect. 2504 of the Revised Statutes, as paintings not otherwise provided for. *Arthur* v. *Jacoby*, 677.

DAMAGES. See *Admiralty; Jurisdiction.*

DEBT, IMPRISONMENT FOR. See *Constitutional Law*, 37.

DECREE, IMPEACHMENT OF. See *Practice*, 3.

DECREE IN PERSONAM. See *Church Property*, 2.

DEED.
1. A conveyance executed for a valuable and adequate consideration will be upheld against the creditors of the grantor, however fraudu-

DEED (*continued*).
lent his purpose may have been, if the grantee had no knowledge thereof. *Prewitt* v. *Wilson*, 22.
2. An ante-nuptial settlement of lands, though made by the settler with the design of defrauding his creditors, will not be set aside in the absence of the clearest proof of his intended wife's participation in the fraud. *Id.*

DEED, IMPEACHMENT OF. See *Mortgage*, 7.

DEED OF TRUST. See *Church Property*, 2.

DELAWARE. See *Constitutional Law*, 17–23.

DISTILLERY. See *Internal Revenue*, 1.

DISTRICT OF COLUMBIA.
1. In 1870, the Board of Trustees of Colored Schools for the District of Columbia had authority to employ an architect to prepare the plans and specifications for a school-house in Washington, and superintend its construction, and could, as the agent of the District, bind it to pay him for his services. *District of Columbia* v. *Cluss*, 705.
2. The disallowance of his claim by the board of audit constituted by the act of June 20, 1874, c. 337 (18 Stat., pt. 3, p. 116), does not bar his right of recovery. *Id.*
3. The corporation which the act of Feb. 21, 1871, c. 62 (16 Stat. 419), created by the name of the District of Columbia succeeded to the property and liabilities of the corporations which were thereby abolished. *Id.*

DUTIES. See *Customs Duties.*

EQUITY. See *Church Property; Minors, Property of*, 4; *Practice*, 29.

EQUITY OF REDEMPTION. See *Insurable Interest.*

EQUIVALENTS. See *Letters-patent*, 9.

ERROR, WRIT OF. See *Writ of Error.*

ESTOPPEL. See *Minors, Property of*, 4; *Monuments*, 2; *Municipal Bonds*, 6, 8, 17; *Railroad Companies, Subscriptions to the Capital Stock of*, 7; *Res Judicata.*

One S., having money in his hands belonging to a corporation, W., fraudulently diverted it from the use to which the company had appropriated it, and purchased therewith bonds of the P. & G. and of the T. railroads. S. subsequently handed over the bonds to D. and others, purchasers of the railroads from the trustees of the State internal improvement fund of Florida, that D. and his associates might use them in payment, it being the understanding that they were to raise money by mortgage and pay S. what he had advanced on the bonds, with commissions and fees in addition; and S., besides taking stock in the new company to be formed, was to have certain privileges in the election of directors. D. and his associates not being able to raise the balance of the purchase-money remaining

ESTOPPEL (*continued*).

after applying the bonds, S., by giving to the trustees a fraudulent check, got possession of the title-deeds, and caused them to be recorded. Thereupon D., for himself and his associates, executed a paper, purporting to convey the railroads to S., "in trust for the express purpose of enabling said S. — which he hereby agrees and binds himself to do — to convey the same to that incorporation, consisting or to consist as incorporators of said D. and his associates," as soon as the latter should be incorporated as a railroad company by the legislature. The legislature incorporated D. and his associates, and the company at once, without objection from S. or any one in his interest, took possession of the property and operated the railroad as owner. One L., who had succeeded to S. under his contracts, assumed control of the company, and was its principal stockholder. A new railroad company was then incorporated, which absorbed the other and took possession of its property. Both S. and L. were named as incorporators of the new company. The corporation W., whose funds S. had thus embezzled and invested, averred in its bill that the ownership of the property was in it. Through its agents it had also entered into a contract of settlement with S. and L., stipulating that the money it had lost should be paid to it from the proceeds of the sales of certain State bonds to be issued to the railroad company on the faith of the ownership of this property. *Held*, that the corporation W. was estopped from setting up title to the property as against *bona fide* holders of the bonds. *Railroad Companies* v. *Schutte*, 118.

EVIDENCE. See *Ante-nuptial Settlement; Bankruptcy*, 1; *Contracts*, 7, 8; *Criminal Law*, 1, 2; *Mexican Land-Grants*, 1.

1. To a petition for a *mandamus*, to compel A., the clerk of a township, to whom had been delivered a certified copy of a judgment recovered against it to certify the judgment to the supervisor in order that the amount thereof might be placed upon the tax-roll, A. made answer, among other things, that he had resigned his office before the copy was served upon him. *Held*, that evidence that the township board had, after the cause was at issue, appointed his successor, was properly excluded. *Thompson* v. *United States*, 480.
2. A suit was brought to foreclose a mortgage made by husband and wife of land, a part of which belonged to him and a part to her. Her answer sets up that he obtained her signature by physical violence, and that he and the officer who took her acknowledgment, both of whom died before her answer was filed, represented to her that the mortgage did not cover her land. *Held*, that her testimony is not sufficient to impeach the mortgage. *Insurance Company* v. *Nelson*, 544.

EXCEPTIONS, BILL OF. See *Practice*, 25.

EXECUTOR. See *Causes, Removal of*, 6; *Contracts*, 14; *Minors, Property of*, 1, 3; *Partnership*, 3, 4.

EXTRA COMPENSATION. See *Internal Revenue Stamps.*

FACTS, FINDING OF. See *Practice*, 6–9, 13, 25, 30.

FALSE IMPRISONMENT, ACTION FOR. See *Constitutional Law*, 3–13.

FIFTEENTH AMENDMENT. See *Constitutional Law*, 17–19.

FINAL DECREE. See *Appeal*, 1.

FLORIDA.

1. The circumstances stated under which bonds of Florida, payable to bearer, issued in aid of certain railroad companies, signed by her governor and her treasurer, and sealed with her seal, were sold by the active efforts of the governor and came into the hands of subjects of Holland. Most of the sales were in that country. *Held*, that inasmuch as the bonds, though fraudulent in their inception, were put upon the market and sold in a foreign country to a people largely unacquainted with the English language, a case is presented which justifies the court in treating the owners of them as purchasers for value and in good faith, and entitled to relief accordingly. *Railroad Companies* v. *Schutte*, 118.

2. One S., having money in his hands belonging to a corporation, W., fraudulently diverted it from the use to which the company had appropriated it, and purchased therewith bonds of the P. & G. and of the T. railroads. S. subsequently handed over the bonds to D and others, purchasers of the railroads from the trustees of the State internal improvement fund, that D. and his associates might use them in payment, it being the understanding that they were to raise money by mortgage and pay S. what he had advanced on the bonds, with commissions and fees in addition; and S., besides taking stock in the new company to be formed, was to have certain privileges in the election of directors. D. and his associates not being able to raise the balance of the purchase-money remaining after applying the bonds, S., by giving to the trustees a fraudulent check, got possession of the title-deeds, and caused them to be recorded. Thereupon D., for himself and his associates, executed a paper, purporting to convey the railroads to S., "in trust for the express purpose of enabling said S. — which he hereby agrees and binds himself to do — to convey the same to that incorporation, consisting or to consist as incorporators of said D. and his associates," as soon as the latter should be incorporated as a railroad company by the legislature. The legislature incorporated D. and his associates, and the company at once, without objection from S. or any one in his interest, took possession of the property and operated the railroad as owner. One L., who had succeeded to S. under his contracts, assumed control of the company, and was its principal stockholder. A new railroad company was then incorporated, which absorbed the other and took possession of its property. Both S. and L. were named as incorporators of the new company. The corporation W.,

FLORIDA (*continued*).

whose funds S. had thus embezzled and invested, averred in its bill that the ownership of the property was in it. Through its agents it had also entered into a contract of settlement with S. and L., stipulating that the money it had lost should be paid to it from the proceeds of the sales of certain State bonds to be issued to the railroad company on the faith of the ownership of this property. *Held*, that the corporation W. was estopped from setting up title to the property as against *bona fide* holders of the bonds. *Id.*

3. The legislation under which certain bonds were issued by the State of Florida in aid of railroads having been pronounced unconstitutional by the Supreme Court of that State, this court passes upon the liability of the railroad company as guarantors of such bonds,—the case upon the facts being within the rule of the liability of an indorser of commercial paper. *Id.*

4. The State, by the terms of the statute, having a lien on the property of the railroad company as trustee for the holders of the bonds, it does not follow, because the provisions of the statute in respect to the execution and exchange of the State bonds is unconstitutional, that the statutory lien is void also. The unconstitutional part of the statute may in this instance be stricken out, and the statutory mortgage left in full force. *Id.*

5. A suit was brought by the State of Florida against the F. C. Railroad Company, alleging default in the payment of interest due on the company's bonds given in exchange for State bonds, and seeking to enforce the statutory lien by the sale of the roads and the application of the proceeds to the holders of the State bonds. The company answered, setting up fraud, the unconstitutionality of the law touching the State bonds, and averring that the railroad bonds were not a lien. The Supreme Court of the State dismissed the bill because it was not proved that any of the State bonds were in the hands of *bona fide* holders. The point as to the statutory authority, however, to exchange the bonds and create a lien, was directly made by the pleadings, and, after full argument, elaborately considered by the court. *Held*, that the decision on this point was in no just sense *obiter*. *Id.*

FORECLOSURE. See *Louisiana*, 4; *Mortgage*, 7, 8; *Res Judicata; Supersedeas*, 1.

FORFEITURE.

The ruling that when an act has been done which the law declares shall work the forfeiture of property, the right of the government at once attaches to pursue and seize the property whenever and wherever it may be found and assert the forfeiture, reaffirmed. *Henderson's Distilled Spirits*, 14 Wall. 44, cited and approved. *Thacher's Distilled Spirits*, 679.

FRAUD. See *Ante-nuptial Settlement; Assignee in Bankruptcy; Deed; Wife, Settlement of Lands upon.*

FRAUDULENT CONVEYANCE. See *Bankruptcy*, 1.

FUTURE ADVANCES, MORTGAGE TO SECURE. See *Mortgage*, 1–3.

GALLOONS. See *Customs Duties*, 3.

GRAND JURY, SELECTION OF. See *Constitutional Law*, 22; *Criminal Law*, 6.

GRANT. See *Land-Grant*.

GRANT, MONUMENTS CALLED FOR IN. See *Monuments*.

GRANTOR AND GRANTEE. See *Bankruptcy*, 1; *Deed*, 1.

GUARANTY. See *Warehouseman*.

GUARDIAN. See *Minors, Property of*, 1, 3.

GUARDIAN AD LITEM. See *Jurisdiction*, 13, 14.

HOMESTEAD SETTLEMENT. See *Land-Grants*, 5.

HOUSE OF REPRESENTATIVES, POWER OF, TO PUNISH FOR CONTEMPT. See *Constitutional Law*, 3–13.

HUSBAND AND WIFE. See *Ante-nuptial Settlement; Criminal Law*, 1, 2; *Mortgage*, 7; *Wife, Settlement of Lands upon*.

ILLINOIS. See *Causes, Removal of*, 12; *Constitutional Law*, 14, 27, 35; *Interest; Municipal Bonds*, 17; *Public Act; Railroad Companies, Subscriptions to the Capital Stock of*, 1, 6.

1. Under the Constitution of Illinois of 1848, a bill passed by both Houses of the legislature became a law when it was approved and signed by the governor of the State within ten days after its presentation to him; and this, notwithstanding the fact that, when the bill was so approved and signed, the legislature had adjourned *sine die*. *Seven Hickory* v. *Ellery*, 423.
2. The word "inhabitants," where it occurs in the first section of the act of the General Assembly of Illinois, entitled "An Act to amend an act entitled 'An Act to incorporate the Illinois Grand Trunk Railway,'" means legal voters. *Walnut* v. *Wade*, 683.

IMMUNITY FROM TAXATION. See *Taxation*, 1–4, 8.

IMPORTS, DUTIES ON. See *Customs Duties*.

INDIANA. See *Lands taken for Public Use*.

INDICTMENT. See *Causes, Removal of*, 7; *Constitutional Law*, 22; *Criminal Law*.

INFANT. See *Jurisdiction*, 13, 14; *Minors, Property of*.

INJUNCTION. See *Admiralty*, 8; *Causes, Removal of*, 12; *Taxation*, 11–13.

After the plaintiff removed to the proper Circuit Court of the United States a suit in replevin brought in a State court, the latter pro-

INJUNCTION (*continued*).
ceeded to try it and render judgment for a *retorno habendo*. An action having been thereupon brought in the State court against him and his sureties on the replevin bond, they filed their bill in the Circuit Court, praying that the plaintiff in that action be enjoined from further prosecuting it. *Held*, that the Circuit Court properly granted the prayer of the bill. *Dietzsch* v. *Huidekoper*, 494.

INSOLVENT CORPORATION. See *Railroad Companies, Subscriptions to the Capital Stock of*, 4–7.

INSTRUCTIONS TO JURY. See *Practice*, 4, 5, 25, 30.

INSURABLE INTEREST.
1. The owner of the equity of redemption has an insurable interest equal to the value of the buildings on the land. *Insurance Company* v. *Stinson*, 25.
2. A party having a mechanic's lien on buildings by him erected on land then covered by mortgage has an insurable interest, limited only by their value and the amount of his claim. His discontinuance of his suit to enforce the lien after their destruction is not matter of defence to his action on the policy. *Id.*

INSURANCE. See *Insurable Interest.*

INTEREST. See *Coupons*, 2; *Usury.*
The court enforces the ruling of the Supreme Court of Illinois, that a note given in that State for a sum of money at a stipulated rate of interest not exceeding ten per cent per annum, bears that rate as long as the principal remains unpaid. *Ohio* v. *Frank*, 697.

INTERNAL REVENUE. See *Internal Revenue Stamps.*
1. While a distillery, the capacity of which was estimated at 416.90 bushels of grain each twenty-four hours, was in full operation, A., the owner thereof, made application, under sect. 3311, Rev. Stat., to have the capacity reduced to 207.45 bushels, by closing six tubs. According to the practice prevailing in that collection district, two tubs were closed a day, commencing May 2, 1876. On May 2 and 3 A. mashed 207.45 bushels, but distilled beer from 415.96 bushels, which he had mashed April 30 and May 1. Thereafter he used 207.45 bushels daily. All the spirits produced by him during May were reported by him, and the tax thereon duly paid. *Held*, 1. That the producing capacity of the distillery was not in law reduced to 207.45 bushels per day until May 4. 2. That for the beer distilled from the 415.96 bushels of grain mashed April 30 and May 1, A. was not liable to be taxed as for material used by him in excess of the producing capacity of his distillery on May 2 and 3. *Weitzel* v. *Rabe*, 340.
2. The regulation prescribed by the Commissioner of Internal Revenue, that "whenever any rectifier proposes to empty any spirits, for the purpose of rectifying, purifying, refining, redistilling, or compounding the same, he will file with the collector a notice or statement giving

INTERNAL REVENUE (*continued*).

the number of casks or packages, the serial number of each, the number of wine and proof gallons in each, the kind of stamps and serial numbers of each, the particular name of such spirits as known to the trade, the proof, by whom produced, the district where produced, by whom inspected, and the date of inspection," is within the purview of the power conferred upon that officer by sect. 3249 of the Revised Statutes, "to prescribe rules and regulations to secure a uniform and correct inspection, weighing, marking, and gauging of spirits." *Thacher's Distilled Spirits*, 679.

INTERNAL REVENUE STAMPS.

1. An assistant treasurer of the United States to whom, without prepayment therefor, the Commissioner of Internal Revenue furnishes for sale and distribution sealed packages of adhesive stamps, is not entitled to commissions or extra compensation for selling them. *Folger* v. *United States*, 30.
2. A collector of internal revenue gave bond, Sept. 16, 1864, with sureties to the United States, conditioned for the payment of the money received by him for stamps sold, and the return of those not sold, which had been or might be delivered to him under the act of March 3, 1863, c. 74. That act was repealed June 30, 1864. *Held*, that the liability of the sureties was limited to the stamps delivered to him before the last-mentioned date. *United States* v. *Hough*, 71.
3. A dealer in tobacco, who is assessed upon his sales thereof when it is in a bonded warehouse, is not liable to be taxed for the revenue stamps required to be affixed thereto before the removal thereof, unless they were at the time of such sales so affixed, whereby they entered into the value of the tobacco and formed a part of the price thereof. *Jones* v. *Van Benthuysen*, 87.

INTER-STATE COMMERCE. See *Commerce*, 3.

IOWA. See *Jurisdiction*, 17; *Land-Grants*, 3–5.

JUDGMENT, BILL TO ENJOIN. *See Practice*, 29.

JUDGMENT BY DEFAULT. See *Causes, Removal of*, 13.

JUDICIAL DECISION. See *Florida*, 5.

It cannot be said that a case is not authority on one point, because, although that point was properly presented and decided in the regular course of the consideration of the cause, something else was found in the end which disposed of the whole matter. *Railroad Companies* v. *Schutte*, 118.

JURISDICTION. See *Appeal; Causes, Removal of; Constitutional Law*, 22; *Practice*, 17; *Res Judicata; Writ of Error*.

I. OF THE SUPREME COURT.

1. *Quære*, Does the act of June 1, 1872, c. 255 (17 Stat. 196; Rev. Stat., sect. 914), authorize the review here of an action at law, wherein, pursuant to the practice of the courts of the State in which the Cir-

JURISDICTION (*continued*).

cuit Court was held, the facts were found by a referee. *Boogher* v. *Insurance Company*, 90.

2 Sect. 700 of the Revised Statutes is the only enactment providing for the review here of a civil cause where an issue of fact has been tried in the Circuit Court otherwise than by a jury. *Id.*

3. In order to give this court jurisdiction to determine whether the facts found by the referee, and confirmed by the court below, are sufficient to support the judgment, they must be treated as the finding of the court. Otherwise, there has not been such a judicial determination of them as to make them conclusive here. *Id.*

4. This court cannot, by *mandamus*, compel an inferior court to reverse its decision made in the exercise of its legitimate jurisdiction. *Ex parte Burtis*, 238.

5. A judgment or a decree of the Supreme Court of the District of Columbia cannot be re-examined here, unless the matter in dispute, exclusive of costs, exceeds the value of $2,500. *Dennison* v. *Alexander*, 522.

6. This court has authority, under sect. 700 of the Revised Statutes, to determine, as in case of a special verdict, whether the facts set forth in an agreed statement whereon the cause was submitted for trial are sufficient in law to support the judgment, although the finding of the Circuit Court on them be in form general. *Supervisors* v. *Kennicott*, 554.

7. In a suit brought, in one of her courts, by the State of Louisiana, seeking to restrain payment on the bonds issued to the New Orleans, Mobile, and Chattanooga Railroad Company, under an act of the legislature approved April 20, 1871, and praying for relief, upon the ground that the act was in violation of the constitutional amendment of 1870, which declares "that, prior to the first day of January, 1890, the debt of the State shall not be so increased as to exceed twenty-five millions of dollars," which limit, it was claimed, had been attained before the passage of the act, a holder of some of the bonds, who was permitted to intervene, set up that they were issued in discharge and release of valid and then subsisting obligations of the State, which, prior to the adoption of the amendment, had been created under her legislation. *Held*, that this court has jurisdiction to determine whether the amendment as construed by the court below, and applied to the facts of the case, impairs the obligation of a contract. *Williams* v. *Louisiana*, 637.

8. In a suit for partition, the value of the undivided part in controversy, and not of the lands, determines the appellate jurisdiction of this court. *McCarthy* v. *Provost*, 673.

9. The act of March 3, 1875, c. 137 (18 Stat., pt. 3, p. 470), did not change the jurisdiction of this court to review the final judgment or decree of the Circuit Court. *Whitsitt* v. *Railroad Company*, 770.

10. The judgment of the Circuit Court, on a plea to the jurisdiction, will not be reviewed here upon a petition for a *mandamus*. *Ex parte Railway Company*, 794.

JURISDICTION (*continued*).

II. OF THE CIRCUIT COURT.

11. A right arising under or a liability imposed by either the common law or the statute of a State may, where the action is transitory, be asserted and enforced in any circuit court of the United States having jurisdiction of the subject-matter and the parties. *Dennick* v. *Railroad Company*, 11.

12. A. died in New Jersey from injuries there received, for which, if death had not ensued, B., the party inflicting them, would have been liable to an action for damages. The statute of that State (*supra*, p. 12) provides that such an action may be brought against the party by the personal representative of the deceased. C., appointed, under the laws of New York, administratrix of A., brought, in a court of the latter State, a suit against B., which, by reason of the citizenship of the parties, was removed to the Circuit Court of the United States. *Held*, 1. That the suit can be maintained, the right of action not being limited by the statute to a personal representative of the deceased appointed in New Jersey and amenable to her jurisdiction. 2. That distribution of moneys recovered by C. from B. may be enforced by the courts of New York in the manner prescribed by that statute. *Id.*

13. Where a suit is brought, not to enforce a claim or lien upon property, but to cancel a purely personal contract, the Circuit Court cannot acquire jurisdiction of the defendant unless he appear or there be personal service of process upon him within the district. If he is an infant, the decree against him is void on its face, the record showing affirmatively the non-service of process, although a guardian *ad litem* was appointed for him in his absence. *Insurance Company* v. *Bangs*, 435.

14. The necessity for such service on the infant is not obviated by the State statute requiring his general guardian "to appear for and represent his ward in all legal suits and proceedings, unless when another person is appointed for the purpose as guardian or next friend." *Id.*

15. The Circuit Court has jurisdiction of suits by or against a national bank, without regard to the citizenship of the parties. *County of Wilson* v. *National Bank*, 770.

16. An attachment cannot be sued out of the Circuit Court against the property of the defendant in an action where the court has not acquired jurisdiction of the person. *Ex parte Railway Company*, 794.

17. This ruling is applicable to the Circuit Court of the United States sitting in Iowa, notwithstanding the act of June 4, 1880, c. 120. 21 Stat. 155. *Id.*

III. IN GENERAL.

18. A court which has once rightfully obtained jurisdiction of the parties may retain it until complete relief is afforded within the general scope of the subject-matter of the suit. *Ward* v. *Todd*, 327.

JUROR, CHALLENGE OF. See *Criminal Law*, 8, 4.

JURORS, SELECTION OF. See *Causes, Removal of*, 7, 8; *Constitutional Law*, 18, 22.

JURY, WAIVER OF. See *Practice*, 8, 9.

1. A stipulation in writing, signed by the parties and filed with the clerk, that the cause shall be tried by the court, is equivalent to their waiver of a jury. *Bamberger* v. *Terry*, 40.
2. A stipulation, signed by the parties or their attorneys, and filed with the clerk of the Circuit Court, submitting a civil cause for trial on an agreed statement of facts, is "a stipulation in writing waiving a jury," within the meaning of sect. 649 of the Revised Statutes. *Supervisors* v. *Kennicott*, 554.

KANSAS, LANDS HELD IN, BY INDIAN HALF BLOODS. See *Taxation*, 3, 4.

LACES. See *Customs Duties*, 3.

LACHES. See *Limitations, Statute of*, 2.

LAND-GRANTS. See *Mexican Land-Grants*.

1. The grant of the right of way which the act of July 23, 1866, c. 212 (14 Stat. 210), makes to the St. Joseph and Denver City Railroad Company, "to the extent of one hundred feet in width on each side of said road where it may pass through the public domain," is absolute and *in præsenti*, and a party subsequently acquiring a parcel of such lands takes it subject to that right. *Railroad Company* v. *Baldwin*, 426.
2. *Quære*, Where Congress has conferred upon a railroad corporation, organized under the laws of a State, the right of way over the public lands in a Territory, can the State, subsequently created out of that Territory, prevent the corporation from enjoying that right. *Id.*
3. The grant made to Iowa by the act of May 15, 1856, c. 28 (11 Stat. 9), to aid in the construction of a railroad from Davenport to Council Bluffs, is *in præsenti*, and, with certain exceptions therein specified, it vested in the State the title to every section of public land designated by odd numbers for six miles in width on each side of the road, when the line thereof should be definitely fixed. *Grinnell* v. *Railroad Company*, 739.
4. The act authorized the State, subject to the approval of the Secretary of the Interior, to select, within the limit of fifteen miles of the road, land in alternate sections equal in amount to that which, within the six-mile limit, had been sold or otherwise appropriated by the United States. *Quære*, Does the right to any particular section or part of section, beyond the six-mile limit, vest in the State before the selection of it has been reported to and approved by the proper officer. *Id.*
5. After the lands had been duly certified to the State or to the railroad company, to which she transferred them, the legal title thereto was

LAND-GRANTS (*continued*).

subject to be defeated only by the United States, should there be a breach of any condition annexed to the grant, and it was not divested by a change of the location of part of the line of road authorized by the act of June 2, 1864, c. 103 (13 Stat. 95), although they are not situate within twenty miles of the relocated line. Subsequent settlers could, therefore, acquire no right thereto under the pre-emption or the homestead laws. *Id.*

LANDS, SALE OF. See *Contracts*, 14.

LANDS TAKEN FOR PUBLIC USE.

1. Sect. 7, art. 1, of the Constitution of Indiana, adopted in 1816, provides "that no man's particular services shall be demanded, or property taken or applied to public use, without the consent of his representatives, or without a just compensation being made therefor." Under an act of the General Assembly, "to provide for a general system of internal improvements," approved Jan. 27, 1836, the board thereby created was authorized to enter upon, take possession of, and use lands. *Held*, that the right to enter and use them was complete as soon as they were actually appropriated under the authority of that act, but that the title to them did not, without the consent of the owner, vest in the State until just compensation was made to him therefor. *Kennedy* v. *Indianapolis*, 599.
2. The decisions of the Supreme Court of Indiana upon this point cited and examined. *Id.*
3. In this case nothing was paid, it being considered that the benefits resulting from the construction of the contemplated work would furnish the owner just compensation for the land taken. The work was never constructed, and the State sold the property. *Held*, that no title passed to the purchaser. *Id.*

LAST WILL AND TESTAMENT. See *Partnership*, 1.

LAW MERCHANT. See *County Warrants*, 4.

LEGACY. See *Partnership*, 1, 2.

LETTERS-PATENT.

1. Letters-patent No. 79,989, granted July 14, 1868, to Hiram Y. Lazear, for an improvement in gas-heaters, are valid. *Sharp* v. *Stamping Company*, 250.
2. Letters-patent granted by the United States do not exclude from the operation of the tax or license law of a State the tangible property in which the invention or discovery is embodied. *Webber* v. *Virginia*, 344.
3. The invention embraced by letters-patent No. 38,924, granted June 16, 1863, to George Wicke, for an improvement in machines for nailing boxes, is a new combination of old elements, all of which are necessary to the validity of his letters. *Wicke* v. *Ostrum*, 461.
4. The fourth and fifth claims of those letters, fairly construed, are for the combination of the cam, gate, and treadle of the adjustable car-

LETTERS-PATENT (*continued*).

riage, table, and slide, with the elements of the other claims, and they are not infringed by machines manufactured substantially in accordance with letters-patent No. 172,579, granted Jan. 25, 1876, to Henry P. Ostrum, for an improvement in machines for nailing boxes. *Id.*

5. Under the patent laws in force in 1866, letters-patent became absolutely void on the surrender of them. *Peck* v. *Collins*, 660.
6. The fifty-third section of the act of July 8, 1870, c. 230 (16 Stat. 205; Rev. Stat., sect. 4916), declares that the surrender "shall take effect upon the issue of the amended patent." *Semble*, that the effect of an adverse decision on the title of the patentee to the invention would be as fatal to the original letters as to his right to a reissue. *Id.*
7. Reissued letters-patent are void, if they embrace a broader claim than that for which the original letters were issued. *Manufacturing Company* v. *Corbin*, 786.
8. Reissued letters-patent No. 4289, granted March 7, 1871, to George Crouch, for an improvement in straps for shawls, are void, by reason of the prior knowledge and public use of the invention which they describe. *Crouch* v. *Roemer*, 797.
9. The substitution of a known equivalent for one of the elements of a former structure is not patentable. *Id.*

LEX REI SITÆ. See *Minors, Property of*, 1.

LIABILITY, LIMITATION OF. See *Admiralty*, 1-4.

LICENSE. See *Commerce*.

LIEN. See *Florida*, 4; *Insurable Interest; Partnership*, 3, 4; *Taxation*, 8, 9.

LIMITATION OF LIABILITY. See *Admiralty*, 1-4.

LIMITATIONS, STATUTE OF. See *Prescription*.

1. An action on a debt or claim is not barred by a composition between a debtor and his creditors, under sect. 17 of the act of June 22, 1874, c. 390 (18 Stat., pt. 3, p. 183), if it would not be barred by his discharge under the bankrupt law. *Wilmot* v. *Mudge*, 217.
2. A., pursuant to his contract, surrendered to a railroad company coupons attached to some of its bonds, whereof he was the holder, and took in exchange therefor certificates of preferred stock. The road, with its franchises, was subsequently sold by the trustees of the Internal Improvement Fund of Florida, to pay the bonds, whereof those, which he held, constituted a part. Eight years after the sale he brought suit to rescind the contract upon the ground of fraud, all the particulars of which were as well known to him when the sale was made as at any subsequent time. *Held*, that his right to relief was barred by his laches and by the Statute of Limitations. *Coddington* v. *Railroad Company*, 409.

LIMITATIONS, STATUTE OF (*continued*).

3. The Statute of Limitations is a bar to a suit brought four years after a bank in South Carolina had permanently suspended specie payments, by a holder of its notes to enforce the individual liability of the stockholders. *Terry* v. *McLure*, 442.
4. *Carrol* v. *Green* (92 U. S. 509) and *Godfrey* v. *Terry* (97 id. 171) cited and approved. *Id.*

LIS PENDENS. See *Louisiana*, 4.

LOUISIANA. See *Causes, Removal of*, 2; *Constitutional Law*, 32–34; *Pledge; Usury.*

1. The failure to inscribe or to reinscribe a mortgage of lands in Louisiana does not affect its validity as against the parties thereto or their heirs. *Cucullu* v. *Hernandez*, 105.
2. To secure the payment of his note, A., the owner of lands, executed a mortgage of them, which was duly inscribed, but never reinscribed. He subsequently conveyed them to B., who contracted to pay the note as part of the purchase-money, and, to secure it and the remainder of the purchase-money, granted a mortgage of them with vendor's privilege, in the act of sale to him, which was in due time inscribed and reinscribed. After the note was overdue, B. paid interest thereon from time to time; and, to compel him to perform his contract, A. brought suit, which was pending at the time that he filed his bill of foreclosure against B. and C., the latter being the transferee of the note and mortgage executed by A. *Held*, 1. That the prescription as to the note was, against A. and B., interrupted by the payment of the interest, and was suspended during the continuance of that suit. 2. That, notwithstanding the lapse of more than ten years since the inscription of that mortgage, C. is entitled to priority of payment out of the proceeds of the sale of the lands. *Id.*
3. A party, after contesting, by prolonged litigation, a claim against him, is not entitled to the benefit of art. 2652 of the Civil Code of Louisiana, and cannot cancel it by paying what it cost the party to whom it was transferred. *Id.*
4. This court enforces, as a rule of property applicable to Louisiana, the decision of the Supreme Court of that State, that a mortgage of lands has no effect as to third persons, unless it be inscribed in the proper public office, and that, save in the single case of a minor's mortgage upon the property of his tutor, every mortgage ceases to be effectual against third parties, unless it be reinscribed within ten years from the date of its original inscription, and that neither the pact *de non alienando* nor the pendency of a suit to foreclose dispenses with the necessity of so inscribing or reinscribing it. *Bendurant* v. *Watson*, 281.

LOUISIANA, MISSOURI, CITY OF. See *Mandamus*, 2.

MAILS, TRANSPORTATION OF THE. See *Contracts*, 12, 13.

MANDAMUS. See *Evidence*, 1; *Taxation*, 6.

1. This court cannot, by *mandamus*, compel an inferior court to reverse its decision made in the exercise of its legitimate jurisdiction. *Ex parte Burtis*, 238.
2. In addition to the tax of one and one-half per cent, authorized by sect. 2, art. 3, of her charter, the city of Louisiana, Mo., may, by *mandamus*, be compelled to levy, assess, and collect a special tax, not exceeding one per cent per annum, to pay a judgment rendered against her, whereon an execution has been issued and returned *nulla bona*. *Louisiana* v. *United States*, 289.
3. After making a return to the alternative *mandamus* sued out against him by a judgment creditor of a township, the township supervisor cannot set up the non-service of any notice in the cause. *Edwards* v. *United States*, 471.
4. The judgment of the Circuit Court upon a plea to the jurisdiction, will not be reviewed here upon a petition for a *mandamus*. *Ex parte Railway Company*, 794.

MANDATE, DECREE IN ACCORDANCE WITH. See *Appeal*, 2.

MARRIAGE, PROOF OF. See *Criminal Law*, 1, 2.

MARSHALLING OF ASSETS. See *Partnership*, 3, 4.

MECHANIC'S LIEN. See *Insurable Interest*.

MEXICAN LAND-GRANTS.

1. A patent issued upon a confirmed Mexican grant is in the nature of a conveyance by way of quitclaim. It is conclusive only as between the parties thereto, and is evidence that, as against the United States, the validity of the grant has been established. *Miller* v. *Dale* (92 U. S. 473) cited and approved. *Adam* v. *Norris*, 591.
2. Where a survey and a patent thereon are founded upon a superior Mexican grant, the rights of a party thereunder are not concluded by a prior survey to other claimants. *Id.*
3. A patent issued upon a survey of a grant was returned by the grantee to the Commissioner of the General Land-Office, who ordered another survey. *Held*, that the patent issued upon the last survey is not rendered invalid because, in addition to lands not covered by the prior patent, it purports to convey those which were so covered. *Id.*

MICHIGAN. See *Public Officer, Resignation of*, 1.

MINERAL LANDS.

E. and R., two mining companies, in settlement of the differences between them respecting the possession of certain ground and the ores therein contained in the Eureka Mining District in Nevada, entered into an agreement establishing between specified points on the earth's surface a boundary line between their respective claims, and stipulating that E. would convey to R. all the mining ground and claim lying northwesterly of said line, including "all veins, lodes,

MINERAL LANDS (*continued*).

ledges, deposits, dips, spurs, and angles on, in, or under the same contained," and that R. would convey to E., with a covenant of warranty against its own acts, all its right, title, and interest in and to any and all the land or mining ground situated on the southeasterly side of said line, and in and to "all ores, precious metals, veins, lodes, ledges, deposits, dips, spurs, and angles on, in, or under the said land or mineral ground." The agreement further declared that it was the object and intention of the parties to confine the workings of R. "to the northwesterly side of the said line continued downward to the centre of the earth." *Held*, that the agreement must be construed as extending the boundary line downwards through the dips of the veins or lodes wherever they may go in their course towards the centre of the earth. *Richmond Mining Company* v. *Eureka Mining Company*, 839.

MINORS, PROPERTY OF.

1. The property of minors, equally with that of adults, is subject to the *lex rei sitæ*, though the minors reside in another State or country. The local law may provide for the guardianship of such property, and for its administration and investment. By comity only will anything be conceded to the claims of the guardian of the domicile; although it is usual, by comity, to appoint, if due application be made for that purpose, the same person guardian who was appointed by the domiciliary court. *Hoyt* v. *Sprague*, 613.
2. In the absence of constitutional restraint the legislature may pass special laws for the sale or investment of the estates of infants or other persons who are not *sui juris*. *Id.*
3. Where an executor and guardian in Rhode Island, by virtue of such a special law, and by order of the Probate Court, conveyed the property of infants to a manufacturing corporation, by way of investment in its capital stock, — *Held*, that the conveyance and investment were protected by the law, and that no account could be demanded except for the stock and its dividends. *Id.*
4. Where minors were interested in a manufacturing establishment, as beneficiaries under a deceased partner, and the administrator, who was also their guardian, without any fraud, but with entire good faith, allowed the business to be continued by the surviving partners for several years, without filing any inventory or account; and the property suffered no deterioration, but increased in value, and was then, by virtue of a special law, transferred to a corporation created for the purpose; and the beneficiaries, after that, for more than seven years subsequently to coming of age, received dividends on their share of the stock and annual stated accounts, — *Held*, that, by reason of such acquiescence, they could not sustain a bill in equity for an account of the estate. *Id.*

MISSOURI. See *Constitutional Law*, 29, 30; *Mandamus*, 2; *Municipal Bonds*, 9, 10; *Practice*, 8; *Railroad Companies, Subscriptions to the Capital Stock of*, 1.

MONUMENTS.

1. The general rule that monuments control courses and distances reasserted in reference to lands situated in New Hampshire. *Land Company* v. *Saunders*, 316.
2. A well-known tract of land, embraced in an old patent, and long referred to by name in the laws of the State, containing settlements which had been subject to the census and tax laws, if called for in a subsequent grant made by the State, as the boundary of a new grant, is such a monument as will draw to it the limits of such subsequent grant, although its exterior lines were never actually run and located on the ground; and the State will be precluded from injecting a still later grant between the two prior ones. *Id.*
3. The premises in a grant were described as beginning at a fixed point, and thence "running east seven miles and one hundred and seventeen rods to Hart's Location; thence southerly by the westerly boundary of said location to a point so far south that a line drawn thence due south shall strike the northwest corner of the town of Burton; thence south to said northwest corner of Burton; thence westerly," &c., to the beginning. *Held*, 1. That if, when the grant was made, there was a tract well known as Hart's Location, lying easterly and in the vicinity of the land granted, and if it had a westerly boundary to which the granted tract could, by any reasonable possibility, extend, then Hart's Location was a monument which controlled the courses and distances of the survey; and this, though the western boundary of Hart's Location had never been actually surveyed on the ground; and though the northwest corner of Burton did not lie due south from any part of said western boundary. 2. That, in such case, the connection between the two monuments — the western boundary of Hart's Location and the northwest corner of Burton — would be the shortest line between them, though the course should be different from that named in the grant. *Id.*

MORTGAGE. See *Bankruptcy*, 1; *Res Judicata.*

1. A national bank may enforce against the mortgagor and parties claiming under him with notice a mortgage of lands executed to it as collateral security for his then existing indebtedness to it, and such as he might thereafter incur. *National Bank* v. *Whitney*, 99.
2. An objection to the taking of such a mortgage as security for future advances can only be urged by the United States. *Id.*
3. In New York, a mortgage for a past indebtedness, if taken without notice of one for an indebtedness to be subsequently incurred, has precedence, if it be first recorded. *Id.*
4. The failure to inscribe or to reinscribe a mortgage of lands in Louisiana does not affect its validity as against the parties thereto or their heirs. *Cucullu* v. *Hernandez*, 105.
5. To secure the payment of his note, A., the owner of lands, executed a mortgage of them, which was duly inscribed, but never reinscribed.

MORTGAGE (*continued*).

He subsequently conveyed them to B., who contracted to pay the note as part of the purchase-money, and, to secure it and the remainder of the purchase-money, granted a mortgage of them with vendor's privilege, in the act of sale to him, which was in due time inscribed and reinscribed. After the note was overdue, B. paid interest thereon from time to time; and, to compel him to perform his contract, A. brought suit, which was pending at the time that he filed his bill of foreclosure against B. and C., the latter being the transferee of the note and mortgage executed by A. *Held*, 1. That the prescription as to the note was, against A. and B., interrupted by the payment of the interest, and was suspended during the continuance of that suit. 2. That, notwithstanding the lapse of more than ten years since the inscription of that mortgage, C. is entitled to priority of payment out of the proceeds of the sale of the lands. *Id.*

6. This court enforces, as a rule of property applicable to Louisiana, the decision of the Supreme Court of that State, that a mortgage of lands has no effect as to third persons, unless it be inscribed in the proper public office, and that, save in the single case of a minor's mortgage upon the property of his tutor, every mortgage ceases to be effectual against third parties, unless it be reinscribed within ten years from the date of its original inscription, and that neither the pact *de non alienando* nor the pendency of a suit to foreclose dispenses with the necessity of so inscribing or reinscribing it. *Bondurant* v. *Watson*, 281.

7. A suit was brought to foreclose a mortgage made by husband and wife of land, a part of which belonged to him and a part to her. She answered, setting up that he obtained her signature by physical violence, and that he and the officer who took her acknowledgment, both of whom died before her answer was filed, represented to her that the mortgage did not cover her land. *Held*, that her testimony is not sufficient to impeach the mortgage. *Insurance Company* v. *Nelson*, 544.

8. A mortgage executed by a railway company, to secure its bonds, provides that, in case of default for six months in the payment of the interest upon either of them, the entire amount of the debt secured "shall forthwith become due and payable," and that the lien of the mortgage may be at once enforced. The bonds themselves declare that, "in case of the non-payment of any half-yearly instalment of interest which shall have become due and been demanded, and such default shall have continued six months after demand," the principal of the bond shall be become due, with the effect provided in the mortgage. *Held*, that, the mortgage being a mere security, the terms of the bonds must control in determining when the principal is payable. *Railway Company* v. *Sprague*, 756.

MORTGAGED LANDS, INSURABLE INTEREST IN BUILDINGS THEREON. See *Insurable Interest.*

MOTION TO QUASH. See *Criminal Law*, 6.

MUNICIPAL BONDS. See *Constitutional Law*, 27, 32, 34, 36; *Coupons*, 3; *Pleading*, 7.

1. Where a municipal corporation, being thereunto authorized upon the performance of certain prerequisites, has issued its bonds, which get into circulation as commercial securities, — *Held*, that they are *prima facie* binding on the corporation according to the terms and conditions expressed on their face, and that, in an action on them, or the coupons thereto attached, the plaintiff need not aver such performance. *Lincoln* v. *Iron Company*, 412.
2. Where a county subscribed to the capital stock of a railway company, and issued its bonds therefor, the creditors of the company, on its becoming insolvent, are entitled to enforce the liability of the county on the bonds which are due and unpaid. *County of Morgan* v. *Allen*, 498.
3. The court reaffirms the doctrine announced in *Sawyer* v. *Hoag* (17 Wall. 619) and subsequent cases, that the assets of an insolvent company, including the moneys due from a shareholder on his subscription to its capital stock, constitute a fund for the payment of its creditors, and that he cannot, to their prejudice, be released from his liability by any arrangement between it and him which is not fair and honest and for a valuable consideration. The doctrine is applicable where the debt created by the subscription of a county is evidenced by its bonds, and they were surrendered to it in fraud of the rights of creditors, although the surrender was made pursuant to a consent decree in a suit to which they were not parties. *Id.*
4. In consideration of the facts and of the decisions of the Supreme Court of Illinois, in cases involving the same question, the court holds that the subscription by the county court, on behalf of the county of Morgan in that State, to the capital stock of the Illinois River Railroad Company, is valid, and that the bonds, having by its order and in conformity with the terms of its subscription, been delivered to the company, are binding upon the county, and constitute a part of the assets of the company to which its creditors can resort for payment. *Id.*
5. The trustees named in a deed of mortgage executed by that company, to secure the holders of its bonds, brought a foreclosure suit, and, under the decree rendered, became the purchasers of the mortgaged property, which they conveyed to a new company chartered by the legislature. In a suit in a State court, to which they were made defendants, they set up that they were entitled to the possession of the county bonds for delivery to the new company. *Held*, that a decree against them does not estop the creditors of the old company, who were secured by that mortgage, from asserting their right to subject the county bonds to the payment of their claims, the proceeds of the sale of the mortgaged property being insufficient for the purpose. *Id.*

MUNICIPAL BONDS (*continued*).

6. A county, having lawful authority, issued its bonds in payment of its subscription to a railroad company. Between the latter and another company a consolidation was about to take place, upon condition that the county court would, on an extension of time being granted, levy and collect a tax sufficient to pay the amount due on the bonds. The county court accepted the proposition, and gave the requisite assurance. The consolidation thereupon took place. *Held*, that the county was estopped from denying the validity of the bonds in the hands of a *bona fide* holder, to whom they were transferred for value by the consolidated company. *County of Tipton* v. *Locomotive Works*, 523.
7. The bonds of the township of Harter, dated April 1, 1880, signed by the supervisor and countersigned by the clerk of the township, reciting that they are issued in pursuance of the authority conferred by those acts and an election of the legal voters of the township, held on the tenth day of November, 1868, under their provisions, are valid obligations of the township, although the donation was voted to the Illinois Southeastern Railway Company, and they were delivered to a corporation formed, pursuant to law, by the consolidation of that company with another. *Harter* v. *Kernochan*, 562.
8. As the records of the township show that the bonds were directed to be issued and delivered to the new company, the township is, as against a *bona fide* holder of them for value, estopped from denying their validity. *Id.*
9. The act of the General Assembly of Missouri of Feb. 16, 1872, forbidding, under certain penalties therein prescribed, the officers of a municipality in its behalf to loan the credit thereof, or donate to or subscribe stock in any railroad or other company, without the previous assent of two-thirds of the qualified voters, is merely prohibitory in its character, and confers no authority on those officers when such assent was given. *Jarrolt* v. *Moberly*, 580.
10. *Held*, therefore, that the bonds of the "municipal corporation of the inhabitants of the town of Moberly," in the county of Randolph, in the State of Missouri, dated May 1, 1872, and reciting that they are "issued in pursuance of an election held in said town on the twenty-sixth day of March, A.D. 1872, to decide whether said town should purchase and donate to the St. Louis, Kansas City, and Northern Railway Company two hundred acres of land for machine-shop purposes, the result of said election being two hundred and twenty-eight votes for the purchase and donation and one vote against the purchase and donation; and, in pursuance to orders of the board of trustees of the inhabitants of the town of Moberly, made on the eighteenth day of April, A. D. 1872, which orders were made in accordance with an act of the General Assembly of the State of Missouri, entitled 'An Act to authorize cities and towns to purchase lands, and to donate, lease, or sell the same to railroad companies,' approved March 18, A. D. 1870," are void. *Id.*

MUNICIPAL BONDS (*continued*).

11. The rulings in *Harter* v. *Kernochan* (*supra*, p. 562) reaffirmed. *Bonham* v. *Needles*, 648.
12. Although the records of a township, which was authorized by the statutes of Illinois to make a donation to a railroad company, and issue bonds in payment thereof, contain no evidence of a meeting of the township, whereat the qualified voters assented to the issue of bonds in payment of a donation, for which they have previously voted, the recital in the bonds, that they were issued in pursuance of those statutes, is conclusive upon the township in a suit brought against it by a *bona fide* holder, to enforce the payment of them. *Id.*
13. After the voters of a town in Illinois have, at an election held pursuant to the act of the General Assembly, entitled "An Act to amend an act entitled 'An Act to incorporate the Illinois Grand Trunk Railway,'" voted in favor of a donation to aid in the construction of a railroad, the supervisor and clerk are the proper authorities to subscribe for the stock of the company and issue the bonds of the township therefor. *Walnut* v. *Wade*, 683.
14. A *bona fide* holder of the bonds is not bound to look beyond their recitals and the legislative enactment under which they were issued. *Id.*
15. The fact that the coupons are made payable at a particular place does not make it necessary to aver or prove a presentation of them for payment there. *Id.*
16. Coupons bear interest from their maturity, and, when severed from the bonds, are negotiable, and pass by delivery. *Id.*
17. The charter of a railroad company in Illinois allowed counties, &c., to subscribe to the stock of the corporation and issue bonds in payment, if a majority of voters, at an election called by the *county court*, should favor the subscription. The voters of a county, which had adopted a township organization, voted in favor of subscribing to the stock of the company at an election called by its *board of supervisors*. A subsequent statute, relating to the company, provides that "all elections held for the purpose of voting said stock, and the manner in which said stock was voted, are hereby legalized in all respects, and the stock to be subscribed in the manner the same was voted." On the authority of this act and the election, the board of supervisors issued bonds of the county. At this time a county court existed in the county. Before the bonds fell due, a statute was passed authorizing municipal corporations, &c., to fund their bonds, which, in brief, declared that in cases where a county, &c., had issued bonds for subscription to railroad companies, &c., "which are now binding or subsisting legal obligations," and "which are properly authorized by law," the county, &c., might, on surrender of such bonds, issue new ones, with the provision that the issue should first be authorized by a vote of the majority of the legal voters of the county, &c. Conformably to this provision, and pursuant to such a vote, the board of supervisors issued, in exchange

MUNICIPAL BONDS (*continued*).

for the old bonds, funding bonds having a longer period to run and bearing a lower rate of interest. In a suit against the county by a holder of funding bonds, which he had received in exchange for surrendered bonds, — *Held*, 1. That the vote of the people at the last election recognized the original bonds as binding and subsisting obligations, and that the county is therefore estopped from setting up that they were invalid because voted for at an election called by the board of supervisors instead of by the county court. 2. That where, at an election held according to law, the people of a county authorized their proper representatives to treat certain outstanding county obligations as properly authorized by law for the purpose of settling with the holders, and the settlement has been made, the validity of the obligations can no longer be contested. *County of Jasper* v. *Ballou*, 745.

18. A bond, whereby a county acknowledges its indebtedness in a certain sum, payable, at a time therein mentioned, to company A. or the holder, if it "be transferred by the signature" of its president, is negotiable, and, on his transfer thereof by indorsement to "bearer," the latter may in his own name sue thereon. *County of Wilson* v. *National Bank*, 770.

19. A town in New York was authorized, upon certain conditions, to subscribe for railway stock, and sell its bonds at not less than their par value to raise funds wherewith to pay therefor. The subscription was made: but the commissioners issued to the company, in exchange for its stock, bonds in which that fact is recited. Such an exchange was not authorized by the statute, and, under the decisions of the courts of that State, a holder of the bonds, who had notice that they had been so exchanged, could not enforce the payment of them. After the passage of the act of April 28, 1871 (*supra*, p. 809), A. purchased them for value, and brought suit upon certain coupons detached therefrom. *Held*, that the legislature had the constitutional power to pass the act, and that the bonds were thereby validated. *Thompson* v. *Perrine*, 806.

20. The court declines to follow *Horton* v. *Town of Thompson* (71 N. Y. 513), in which the same point is involved. *Id.*

MUNICIPAL CORPORATIONS. See *Constitutional Law*, 14, 15.

MUNICIPAL CORPORATIONS, SUBSCRIPTIONS FOR STOCK BY.

A popular vote in favor of a municipal subscription for stock of a railroad company cast at an election held without authority of law does not bind the municipality nor confer the power to make the subscription. *Allen* v. *Louisiana*, 80.

NATIONAL BANKS. See *Jurisdiction*, 15; *Taxation*, 12, 13.

1. A national bank may enforce against the mortgagee and parties claiming under him with notice a mortgage of lands executed to it as collateral security for his then existing indebtedness to it,

NATIONAL BANKS (*continued*).
and such as he might thereafter incur. *National Bank* v. *Whitney*, 99.
2. An objection to the taking of such a mortgage as security for future advances can only be urged by the United States. *Id.*
3. The title to shares of the capital stock of a national bank passes when the owner delivers his stock certificate to the purchaser, with authority to him or any one whom he may name to transfer them on the books of the bank. *Johnston* v. *Laflin*, 800.
4. In good faith, and without intent to evade his responsibility as a stockholder, A., the owner of such shares, sold them to a broker, to whom he delivered his stock certificate and a power to transfer them, leaving blanks for the names of the attorney and transferee. The broker sold them to B., the president of the bank, who gave his individual check in payment therefor, and received the certificate and power. By the directions of B., a book-keeper of the bank inserted his own name as attorney, and transferred the stock to B. as "trustee" on the official stock register. The entries in the stock ledger and other books of the bank show that B. purchased the stock for it, and reimbursed himself with its funds. The book-keeper had actual knowledge of all the facts. In a suit brought by the receiver of the bank, to compel B. to retransfer the shares, and A. to repay the price therefor, and to have the latter declared a stockholder in regard to them, — *Held*, that as the book-keeper was the agent of the bank, his knowledge of the transaction could not be imputed to A., and that the suit could not be maintained. *Id.*

NATIONAL HOME FOR DISABLED VOLUNTEER SOLDIERS, DEPUTY GOVERNOR OF. See *Contracts*, 11.

NAVY, OFFICER OF THE. See *Officer of the Army or the Navy, Removal of.*

NEBRASKA. See *Constitutional Law*, 36.

NEGOTIABLE PAPER. See *County Warrants*, 4; *Coupons*, 2; *Municipal Bonds*, 18; *Warehouseman.*

NEW HAMPSHIRE. See *Monuments.*

NEW YORK. See *Mortgage*, 3; *Municipal Bonds*, 19; *Railroad Companies, Subscriptions to the Capital Stock of*, 10, 11.

OBITER DICTUM. See *Judicial Decision.*

OFFICER OF THE ARMY OR THE NAVY, REMOVAL OF.
1. The President has the power to supersede or remove an officer of the army or the navy by the appointment, by and with the advice and consent of the Senate, of his successor. *Blake* v. *United States*, 227.
2. It was not the purpose of the fifth section of the act of July 13, 1866, c. 176 (12 Stat. 92), to withdraw that power. *Id.*

PACT DE NON ALIENANDO. See *Louisiana*, 4.

PARTIES. See *Causes, Removal of*, 2; *Jurisdiction*, 15; *Res Judicata.*

PARTITION. See *Appeal*, 1; *Jurisdiction*, 8.

PARTNERSHIP. See *Contracts*, 14; *Minors, Property of.*

1. The last will and testament of A. directs that his interest in a firm, whereof he was a member at the time of his death, "be continued therein, and be chargeable for its debts and liabilities," but that his "other property shall not be so chargeable." *Held*, that the general assets of his estate are not bound for the debts of the firm which were contracted subsequently to his death. *Jones* v. *Walker*, 444.
2. The profits arising from that interest were, pursuant to the will, paid from time to time, the firm being then free from debt, and its capital undiminished. It afterwards became bankrupt. *Held*, that the legatees receiving them were not liable to the assignee in bankruptcy therefor. *Id.*
3. If the executor of a deceased partner consents to the surviving partners continuing the business with the assets of the firm, his lien on property thereafter acquired will be postponed to that of creditors, when a case arises for an equitable marshalling of assets; as, where the surviving partners make a general assignment for the benefit of creditors. *Hoyt* v. *Sprague*, 613.
4. In such case, the beneficiaries of the deceased partner's estate cannot have priority over the claims of creditors upon the partnership assets. *Id.*

PATENT OF THE UNITED STATES FOR LAND. See *Mexican Land-Grants.*

PERSONAL REPRESENTATIVE. See *Jurisdiction*, 12.

PICTURES PAINTED ON PORCELAIN. See *Customs Duties*, 4.

PLEADING. See *Admiralty*, 1; *Causes, Removal of*, 2, 3; *Church Property*, 1; *Judicial Decision; Practice*, 1, 2, 12, 14, 24, 27; *Taxation*, 12, 13.

1. Where a municipal corporation, being thereunto authorized upon the performance of certain prerequisites, has issued its bonds, which get into circulation as commercial securities, — *Held*, that they are *prima facie* binding on the corporation according to the terms and conditions expressed on their face, and that, in an action on them, or the coupons thereto attached, the plaintiff need not aver such performance. *Lincoln* v. *Iron Company*, 412.
2. Want of such performance, when in any case available to defeat a recovery, must be set up by the corporation. *Id.*
3. A statute was declared to be a public act. A subsequent statute, supplementary thereto and amendatory thereof, is also a public act, and need not be specially pleaded. *Unity* v. *Burrage*, 447.
4. After making a return to the alternative *mandamus* sued out against

PLEADING (*continued*).

him by a judgment creditor of a township, the township supervisor cannot set up the non-service of any notice in the cause. *Edwards* v. *United States*, 471.

5. To a petition for a *mandamus*, to compel A., the clerk of a township, to whom had been delivered a certified copy of a judgment recovered against it to certify the judgment to the supervisor in order that the amount thereof might be placed upon the tax-roll, A. made answer, among other things, that he had resigned his office before the copy was served upon him. *Held*, that the appointment of his successor, after the institution of the proceedings, should, if available as a matter of defence, have been set up by a plea of *puis darrein continuance* or its equivalent. *Thompson* v. *United States*, 480.
6. Where a party, pursuant to leave, files a plea to the jurisdiction of the court, his former plea to the merits is thereby withdrawn. *Kern* v. *Huidekoper*, 485.
7. A company who, under a contract with a city, was constructing water-works, executed a mortgage on them, to secure certain bonds and the coupons thereto attached, which stipulates that if the company shall fail, for the space of ninety days, to pay the coupons when they shall become due, provided such failure is not caused by the city under the contract, all of the bonds shall become due, and the lien of the mortgage may be enforced for the whole debt. Coupons remained due and unpaid for the specified period. *Held*, that the bill need not negative the failure of the city, but that such failure, if it existed, must be set up as matter of defence. *Water-works Company* v. *Barret*, 516.
8. A pleading which would be cured by verdict is good after a finding by the court to which the trial of the issue was submitted by the stipulation of the parties. *Adam* v. *Norris*, 591.
9. The fact that coupons are made payable at a particular place does not make it necessary to aver or prove a presentation of them for payment there. *Walnut* v. *Wade*, 683.

PLEDGE.

1. Where a factor has against his consignor no interest in the consigned property, he cannot pledge it for his own debt. Such a pledge, although accompanied by a warehouse receipt setting forth that the property is deliverable to the pledgee, is, under the laws of Louisiana, invalid, and confers upon him no title adverse to that of the consignor. *Insurance Company* v. *Kiger*, 352.
2. In such a case, the obligation imposed by those laws upon the warehouseman is discharged by his surrender of the property pursuant to judicial process sued out by such consignor, notice of which he gave to the pledgee. *Id.*

PLEDGEE. See *Pledge*.

POLYGAMY. See *Criminal Law*.

PORCELAIN, PICTURES PAINTED ON. See *Customs Duties*, 4.

PRACTICE. See *Admiralty*, 5, 10; *Appeal*, 2; *Causes, Removal of*, 5, 14, 15; *Criminal Law*, 3, 4; *Jurisdiction*, 6, 18; *Minors, Property of*, 1; *Mandamus; Pleading*, 8; *Principal and Agent; Supersedeas*, 2; *Taxation*, 9; *Writ of Error*, 1.

1. The court is authorized by sect. 954 of the Revised Statutes to allow, at any time during the trial, amendments in the pleadings; and where it has done so, it must, in its discretion, determine whether the submission of the cause ought to be vacated. *Bamberger* v. *Terry*, 40.
2. Where the plaintiff is permitted to amend his declaration so as to avoid a variance between it and the proofs, and it appears that neither the nature nor the merits of the issue are thereby changed, the defendant is not entitled to an order setting aside the submission of the cause for trial. *Id.*
3. Where the complainant dies after the term at which the cause on its submission for final hearing upon the pleadings and proofs was continued by an order of *curia advisare vult*, the decree in his favor entered as of that term cannot be impeached by the defendants upon the ground that it was rendered subsequently to his death. *Mitchell* v. *Overman*, 62.
4. A prayer for instructions which are presented as a whole, is properly refused if any of them is erroneous. *United States* v. *Hough*, 71.
5. It is error to instruct touching the law applicable to facts of which there is no evidence. *Jones* v. *Van Benthuysen*, 87.
6. *Quære*, Does the act of June 1, 1872, c. 255 (17 Stat. 196; Rev. Stat., sect. 914), authorize the review here of an action at law, wherein, pursuant to the practice of the courts of the State in which the Circuit Court was held, the facts were found by a referee. *Boogher* v. *Insurance Company*, 90.
7. Sect. 700 of the Revised Statutes is the only enactment providing for the review here of a civil cause where an issue of fact has been tried in the Circuit Court otherwise than by a jury. *Id.*
8. The Practice Act of Missouri declares that an issue of fact in any action may, upon the written consent of the parties, be referred. Where, therefore, the record states that, after a case was called for trial and a jury sworn to try the issue joined, a juror was, by "consent of parties," withdrawn, and the case referred to A., this court must assume that such consent, as well as that to waive a jury, was in writing. *Id.*
9. In order to give this court jurisdiction to determine whether the facts found by the referee, and confirmed by the court below, are sufficient to support the judgment, they must be treated as the finding of the court. Otherwise, there has not been such a judicial determination of them as to make them conclusive here. *Id.*
10. The ruling that, where any portion of the charge to the jury is correct, an exception to the entire charge will not be sustained, reaf-

PRACTICE (*continued*).
firmed, and held to be applicable to a general exception taken to the report of a referee. *Id.*
11. Where it is shown by the opening statement of counsel for the plaintiff that the contract on which the suit is brought is void, as being either in violation of law or against public policy, the court may direct the jury to find a verdict for the defendant. *Oscanyan* v. *Arms Company*, 261.
12. A court is, in the due administration of justice, bound to refuse its aid to enforce such a contract, although its invalidity be not specially pleaded. *Id.*
13. This court cannot re-examine questions of fact upon a writ of error. *Miles* v. *United States*, 304.
14. A verdict cures a defective statement of a title or cause of action. *Lincoln* v. *Iron Company*, 412.
15. A verdict in assumpsit, the plea being *non assumpsit*, "that the defendant is guilty in manner and form as alleged in the declaration," is amendable, and judgment may be rendered thereon for the damages thereby assessed. *Id.*
16. Eight years after a bill in equity had been filed, and on the day it was dismissed, on a final hearing upon the pleadings and proofs, an amended bill was filed without leave. *Held*, that it must be disregarded in the consideration of the case here. *Terry* v. *McLure*, 442.
17. Where a State court, proceeding to the trial of a suit which had been removed therefrom, renders judgment against the party, whose petition for a removal it erred in refusing to grant, he may raise here the question as to the jurisdiction of that court, notwithstanding the fact that he appeared at the trial and insisted upon the merits of his cause of action or defence. *Kern* v. *Huidekoper*, 485.
18. Where a party, pursuant to leave, files a plea to the jurisdiction of the court, his former plea to the merits is thereby withdrawn. *Id.*
19. An order made by the court below, pursuant to the consent of parties, is binding upon them here. *Water-works Company* v. *Barret*, 516.
20. A cause, not presenting questions entitling it to precedence, will not, over the objection of a party thereto, be advanced in order that it may be heard with another case standing before it on the docket. *Louisiana* v. *New Orleans*, 521.
21. Where in a case in admiralty the decree below, determining the liability of the respective vessels in a collision, was rendered before the act of Feb. 16, 1875, c. 77 (18 Stat., pt. 3, p. 315), took effect, this court, the case being properly here on appeal, will re-examine the evidence, and, if the appellant does not show that in the concurring action of the courts below error was committed to his prejudice, the decree will be affirmed. *The "Richmond,"* 540.
22. Where, after such a decree, and the taking effect of that act, the

PRACTICE *(continued)*.

ascertainment of the amount of damages sustained by the vessel not in fault was referred to a master, the action of the Circuit Court upon exceptions to his report, all of which relate to questions of fact, will not be reviewed here. *Id.*

23. Under the circumstances of this case, the court declines to accept the submission of the cause against the wishes of those who, being collaterally interested in the decision which may be made, united in the employment of counsel to present their defence, and contributed to a common fund for the payment of the expenses of the litigation. *Smelting Company* v. *Kemp*, 666.
24. Where matters of set-off are pleaded by the defendant in a suit brought by the United States, the refusal of the court below to direct the jury to certify the amount which they may find due to him from the plaintiff will not be reviewed here. *Schaumburg* v. *United States*, 667.
25. Where the bill of exceptions sets forth all the facts, and states that they were proved, this court, if the law arising upon them is for the plaintiff, will not reverse the judgment, because a peremptory instruction was given to return a verdict in his favor. *Arthur* v. *Jacoby*, 677.
26. Where the appellee has a color of right to the dismissal of an appeal, he may unite with a motion therefor one to affirm the decree. *Hinckley* v. *Morton*, 764.
27. A bill of review is the appropriate mode of correcting errors apparent on the face of the record, and it was in this case filed in time, less than two years having elapsed since the original decree was passed. *Clark* v. *Killian*, 766.
28. The court will not consider errors assigned by the appellee. *Id.*
29. Where there has been no newly discovered evidence, a bill in equity will not lie to cancel a contract or enjoin a judgment thereon, where the complainant, against whom it was rendered, sets up as grounds of relief matters which he had full opportunity to plead in the action at law. *Life Insurance Company* v. *Bangs*, 780.
30. Where, upon the undisputed facts of the case, the plaintiff is not entitled to recover, the court may instruct the jury to find a verdict for the defendant. *National Bank* v. *Insurance Company*, 783.
31. The judgment of the Circuit Court, upon a plea to the jurisdiction, will not be reviewed here upon a petition for a *mandamus*. *Ex parte Railway Company*, 794.

PRE-EMPTION. See *Land-Grants*, 5.

PREFERENCE. See *Bankruptcy*, 1.

PRESCRIPTION.

Payments made by a purchaser of lands in Louisiana on account of a debt due by his vendor which he has assumed as part of the price thereof, and which is a charge thereon, interrupt the prescription as to that debt both as to the vendor and the purchaser, and so long as

PRESCRIPTION (*continued*).
a suit by the vendor against the latter to compel him to pay the debt remains pending the prescription is suspended. *Cucullu* v. *Hernandez*, 105.

PRESUMPTION. See *Constitutional Law*, 19, 20; *Taxation*, 9.

PRINCIPAL AND AGENT. See *National Bank*, 4.
Pursuant to orders received from A., the owner of the Corn Exchange Elevator at Oswego, who was engaged in storing grain for the public and doing business on his own account, B. bought for him two cargoes of wheat, and drew sight and time drafts for the purchase-money. C., a bank at Milwaukee, bought the drafts and received the bills of lading. The latter describe B. as the shipper, and, by their terms, each cargo was to be delivered at Oswego to the account or order of D., cashier of C., care of the City Bank. C. thereupon enclosed the drafts and bills of lading to the City Bank, saying, "On payment of the drafts you will deliver the cargo to the order of A. If not paid, please hold and advise by telegraph." The bank acknowledged their receipt, and presented the sight-drafts to A., who paid them, and accepted the time-drafts. Upon the arrival of the wheat at Oswego, the master of each vessel reported to the cashier of the City Bank, who, knowing that A. was the owner of the Corn Exchange Elevator, indorsed the bills of lading: "Deliver to the Corn Exchange Elevator for account of D., cashier, Milwaukee, subject to the order of the City Bank, Oswego." After the wheat had been so delivered, A. sold and shipped it. In its account with C., the City Bank made a charge for its trouble beyond the customary percentage for collecting and remitting the proceeds of the drafts. Before the time-drafts became due, A. failed. They were duly protested for non-payment, and have not been paid. In an action by C. against the City Bank, — *Held*, 1. That the City Bank, in receiving and acknowledging the drafts and bills of lading, with the accompanying instructions, became the agent of C. in the business which it had undertaken. 2. That whether, in discharging its duties as such agent, it exercised reasonable diligence and care, is a question for the jury, which the court below should not have withdrawn from them and decided. *National Bank* v. *City Bank*, 668.

PRISONER, ADMISSIONS OF. See *Criminal Law*, 1.

PROCESS, SERVICE OF. See *Causes, Removal of*, 13; *Jurisdiction*, 13, 14.

PUBLIC ACT.
1. A statute of Illinois, legalizing elections held by the voters of a county on the question of issuing negotiable bonds of the county, in aid of certain railroad companies, and authorizing, on conditions therein named, all the townships in counties where the township organization had been adopted, lying on or near to the line of a specified railroad, to subscribe to the stock of the railroad company, and

PUBLIC ACT *(continued)*.
issue negotiable bonds therefor, is a public act. *Unity* v. *Burrage*, 447.
2. Such a statute does not conflict with section 23 of article 3 of the Constitution of 1848, which provides that "no private or local law, which may be passed by the General Assembly, shall embrace more than one subject, and that shall be expressed in the title." *Id.*

PUBLIC LANDS. See *Land-Grants*.

PUBLIC OFFICER, RESIGNATION OF. See *Evidence*, 1.
1. The common-law rule is in force in Michigan, that the resignation of a public officer is not complete until the proper authority accepts it, or does something tantamount thereto, such as to appoint a successor. *Edwards* v. *United States*, 471.
2. *Semble*, that proceedings against the clerk of a township, to enforce its duty of levying the amount of such a judgment, are against it, and do not abate by his resignation and the appointment of his successor. *Thompson* v. *United States*, 480.

PUBLIC POLICY. See *Contracts*, 9; *Practice*, 11, 12.

PUIS DARREIN CONTINUANCE, PLEA OF. See *Pleading*, 5.

QUITCLAIM. See *Mexican Land-Grants*, 1.

RAILROAD COMPANIES, CONSOLIDATION OF. See *Municipal Bonds*, 7, 8.

RAILROAD COMPANIES, SUBSCRIPTIONS TO THE CAPITAL STOCK OF. See *Constitutional Law*, 15, 26, 29, 30; *Municipal Bonds; Public Act*, 1.
1. Neither the charter of the city of Louisiana, Missouri, approved March 12, 1870, construed with art. 10, sect. 14, of the State Constitution adopted in 1865, nor sect. 17, chap. 63, of the General Statutes of 1865, taken in connection with an amendment to that chapter adopted as sect. 52, March 24, 1870, authorized the city to subscribe to the capital stock of a railroad company organized under the laws of Illinois. *Allen* v. *Louisiana*, 80.
2. A popular vote in favor of a municipal subscription for stock of a railroad company cast at an election held without authority of law does not bind the municipality nor confer the power to make the subscription. *Id.*
3. An act of the legislature of Arkansas, passed in 1868, authorizes any county to subscribe to the stock of any railroad company in that State, provided the subscription shall not exceed $100,000, and the consent of the inhabitants of the county thereto shall first be obtained at an election held for that purpose. At an election held under that act, the voters of a county voted to subscribe $100,000 to the stock of company A. and $100,000 to the stock of company B. *Held*, 1. That the act does not restrict the county to a single subscription. 2. That the power to subscribe is general, limited only

RAILROAD COMPANIES, SUBSCRIPTIONS TO, &c. (*continued*).
by the subscription of $100,000 to the stock of any one company *County of Chicot* v. *Lewis*, 164.

4. Where a county subscribed to the capital stock of a railway company, and issued its bonds therefor, the creditors of the company, on its becoming insolvent, are entitled to enforce the liability of the county on the bonds which are due and unpaid. *County of Morgan* v. *Allen*, 498.

5. The court reaffirms the doctrine announced in *Sawyer* v. *Hoag* (17 Wall. 619) and subsequent cases, that the assets of an insolvent company, including the moneys due from a shareholder on his subscription to its capital stock, constitute a fund for the payment of its creditors, and that he cannot, to their prejudice, be released from his liability by any arrangement between it and him which is not fair and honest and for a valuable consideration. The doctrine is applicable where the debt created by the subscription of a county is evidenced by its bonds, and they were surrendered to it in fraud of the rights of creditors, although the surrender was made pursuant to a consent decree in a suit to which they were not parties. *Id.*

6. In consideration of the facts and of the decisions of the Supreme Court of Illinois, in cases involving the same question, the court holds that the subscription by the county court, on behalf of the county of Morgan in that State, to the capital stock of the Illinois River Railroad Company, is valid, and that the bonds, having, by its order and in conformity with the terms of its subscription, been delivered to the company, are binding upon the county, and constitute a part of the assets of the company to which its creditors can resort for payment. *Id.*

7. The trustees named in a deed of mortgage executed by that company, to secure the holders of its bonds, brought a foreclosure suit, and, under the decree rendered, became the purchasers of the mortgaged property, which they conveyed to a new company chartered by the legislature. In a suit in a State court, to which they were made defendants, they set up that they were entitled to the possession of the county bonds for delivery to the new company. *Held*, that a decree against them does not estop the creditors of the old company, who were secured by that mortgage, from asserting their right to subject the county bonds to the payment of their claims, the proceeds of the sale of the mortgaged property being insufficient for the purpose. *Id.*

8. The county court of Wilson County, Tennessee, had, after certain preliminary proceedings were taken, lawful authority to subscribe, on behalf of the county, for stock in the Tennessee and Pacific Railroad Company, and to issue bonds of the county in payment therefor. *County of Wilson* v. *National Bank*, 770.

9. It was not essential to the validity of the popular election, ordered and held on the question of subscription to the stock, that there should have been a final and definite survey and location of the

RAILROAD COMPANIES, SUBSCRIPTIONS TO, &c. (*continued*).
entire line of the company's road. All that was required was a substantial location, designating the termini and general direction of the road, and an estimate of the cost of constructing it. *Id.*

10. In accordance with the petition of the taxpayers of a town in New York, dated March 25, 1872, the county judge appointed commissioners who were empowered and directed to subscribe for stock in a railroad company when its road should be constructed through a certain village. The road was not so constructed until Oct. 20, 1875. *Held*, that as, by the terms of the petition, and the proceedings of the judge thereon, the construction of the road was a condition precedent to the exercise by the commissioners of their power to make the subscription, they, being merely agents of the town, had no authority to act in the premises until that condition was performed. *Railroad Company* v. *Falconer*, 821.
11. A contract, therefore, under date of June 14, 1872, between the company and the commissioners, whereby the latter assumed to bind the town to subscribe for stock when the road should be so constructed, being *ultra vires*, no rights of the company were impaired by the amendment to the Constitution of the State (*supra*, p. 822), which took effect Jan. 1, 1875, and prohibited all municipal aid to corporations by the subscription of stock or otherwise. *Id.*
12. *County of Moultrie* v. *Savings Bank* (92 U. S. 631) distinguished. *Id.*

RAILROAD COMPANIES, TOWNSHIP DONATIONS TO. See *Constitutional Law*, 27, 29, 30; *Municipal Bonds*, 9–12.

RAILROAD COMPANY, ACTION AGAINST, FOR DAMAGES. See *Jurisdiction*, 11, 12.

RAILROAD COMPANY, TAXATION OF. See *Taxation*, 1, 2, 8, 9.

REASONABLE CARE AND DILIGENCE. See *Principal and Agent.*

REASONABLE DOUBT. See *Criminal Law*, 5.

REBELLION, THE. See *Suit against the United States.*

RECITALS. See *Mortgage*, 8; *Municipal Bonds*, 1, 7, 10, 12, 14, 15.

RECORD. See *Admiralty*, 5 ; *Causes, Removal of*, 10.

REFEREE. See *Practice*, 6–10.

REISSUED LETTERS-PATENT. See *Letters-patent*, 6, 7.

REMOVAL OF CAUSES. See *Causes, Removal of.*

REPLEVIN. See *Causes, Removal of*, 10.

REPRESENTATIVES, HOUSE OF, POWER OF, TO PUNISH FOR CONTEMPT. See *Constitutional Law*, 2–13.

RESIGNATION. See *Public Officer, Resignation of.*

RES JUDICATA. See *Admiralty*, 2; *County Warrants*, 3.

Pending proceedings in a State court by a national bank, to foreclose a mortgage executed to it by A. and duly recorded, B., his creditor, recovered against him in the Circuit Court of the United States a judgment which, by the *lex loci*, was a lien on the equity of redemption. B. then filed his bill in the latter court against A. and the bank to set aside the mortgage as illegal, or to have certain alleged payments of usurious interest applied to reduce the debt. Shortly thereafter, the State court rendered a decree of foreclosure and sale, which the bank set up in its answer to the bill. The Circuit Court thereupon dismissed the bill. *Held*, 1. That the State court having first acquired jurisdiction of the subject-matter, its decree was a bar to the further prosecution of the suit against A. and the bank. 2. That A. represented all the parties who, pending the foreclosure proceedings, acquired through him an interest in or a charge on the mortgaged land, and that B., although not a party to them, is bound by the decree therein rendered. *Stout* v. *Lye*, 66.

RETORNO HABENDO, JUDGMENT OF. See *Injunction.*

REVENUE STAMPS. See *Internal Revenue Stamps.*

REVIEW, BILL OF. See *Practice*, 27.

REVISED STATUTES OF THE UNITED STATES.

The following sections referred to and explained: —

Sect. 641. See *Causes, Removal of*, 8.
Sect. 649. See *Jury, Waiver of*, 2.
Sect. 700. See *Jurisdiction*, 2, 6.
Sect. 914. See *Jurisdiction*, 1.
Sect. 954. See *Practice*, 1.
Sect. 2504. See *Customs Duties*, 4.
Sect. 3249. See *Internal Revenue*, 2.
Sect. 3311. See *Internal Revenue*, 1.
Sect. 4916. See *Letters-patent*, 6.

SAILING RULES. See *Admiralty*, 6, 7.

SALVAGE. See *Appeal*, 3.

SET-OFF. See *Practice*, 24.

SETTLEMENT. See *Ante-nuptial Settlement; Wife, Settlement of Lands upon.*

SHIRTINGS. See *Customs Duties*, 1.

SOUTH CAROLINA. See *Limitations, Statute of*, 3.

SPECIAL TAX. See *Mandamus*, 2.

SPECIE PAYMENTS. See *Limitations, Statute of*, 3.

STATE CONSTITUTION OR STATUTES, INCONSISTENT PROVISIONS IN. See *Constitutional Law*, 19, 20.

STATE COURT, PROCEEDINGS IN, SUBSEQUENTLY TO FILING PETITION FOR REMOVAL OF A CAUSE. See *Causes, Removal of*, 9; *Practice*, 17.

STATE OFFICE, SUIT TO TRY THE TITLE OF A PARTY TO. See *Causes, Removal of*, 11.

STATUTES OF THE UNITED STATES.

The following, among others, referred to, commented on, and explained: —

1856. May 15. *c.* 28. See *Land-Grants*, 3.
1861. March 2. *c.* 192. See *Customs Duties*, 2.
1863. Marcl 3. *c.* 74. See *Internal Revenue Stamps*, 2.
1864. June 2. *c.* 103. See *Land-Grants*, 5.
1864. June 30. *c.* 171. See *Customs Duties*, 3.
1864. June 30. *c.* 184. See *Constitutional Law*, 28.
1866. July 13. *c.* 176. See *Officer of the Army or the Navy, Removal of*, 2.
1866. July 23. *c.* 212. See *Land-Grants*, 1.
1867. March 2. *c.* 176. See *Bankruptcy*, 1.
1870. July 8. *c.* 230. See *Letters-patent*, 6.
1871. Feb. 21. *c.* 62. See *District of Columbia*, 3.
1872. June 1. *c.* 255. See *Jurisdiction*, 1.
1873. March 3. *c.* 231. See *Contracts*, 12.
1874. June 20. *c.* 337. See *District of Columbia*, 2.
1874. June 22. *c.* 390. See *Limitations, Statute of*, 1.
1875. Feb. 16. *c.* 77. See *Practice*, 1.
1875. March 3. *c.* 128. See *Contracts*, 13.
1875. March 3. *c.* 137. See *Causes, Removal of*, 1, 9, 12; *Jurisdiction*, 9.
1880. June 4. *c.* 120. See *Jurisdiction*, 17.

STATUTORY LIEN. See *Florida*, 4; *Taxation*, 8, 9.

STATUTORY MORTGAGE. See *Florida*, 4.

STIPULATION FOR VALUE. See *Admiralty*, 2, 3.

STOCK, SUBSCRIPTIONS TO. See *Contracts*, 3; *Railroad Companies, Subscriptions to the Capital Stock of.*

STOCKHOLDER, INDIVIDUAL LIABILITY OF. See *Limitations, Statute of*, 3.

STOCKHOLDER, MONEY DUE BY, ON ACCOUNT OF HIS SUBSCRIPTION. See *Railroad Companies, Subscriptions to the Capital Stock of*, 5.

SUBMISSION OF CAUSES. See *Practice*, 1–3.

SUFFRAGE, RIGHT OF. See *Constitutional Law*, 17.

SUIT AGAINST THE UNITED STATES. See *Contracts*, 12, 13.

A., a merchant residing in Georgia, left there at the commencement of the rebellion, and, until its close, remained in loyal territory. On

SUIT AGAINST THE UNITED STATES (*continued*).
leaving, he intrusted his business to an agent, who, with money collected or acquired on his account, purchased, in 1864, cotton subsequently captured by the United States and sold. A. sued for the net proceeds thereof in the Court of Claims. *Held*, that he was entitled to recover. *United States* v. *Quigley*, 595.

SUPERSEDEAS.
1. An appeal was taken by a county from a decree of foreclosure rendered against it upon a mortgage of its lands, to secure the bonds of a railroad company. The decree was affirmed, and the costs of the appeal were paid. *Held*, that the liability of the county and its sureties upon the *supersedeas* bond is limited to such damages as resulted from a delay in the sale of the lands, and does not include the balance remaining unpaid of the decree after applying thereto the proceeds of the sale, nor the interest thereon which accrued pending the appeal. *Supervisors* v. *Kennicott*, 554.
2. The ruling in *Jerome* v. *McCarter* (21 Wall. 17), that where, by reason of the changed circumstances of the case, or of the parties, or of the sureties on a *supersedeas* bond, so that the security, which at the time it was taken was sufficient, does not continue to be so, this court will, on proper application, so order and adjudge as justice may require, – reaffirmed, and applied to this case. *Williams* v. *Claflin*, 753

SUPREME COURT OF THE DISTRICT OF COLUMBIA, REEXAMINATION OF THE JUDGMENTS OR DECREES OF. See *Jurisdiction*, 5.

SURETY. See *Internal Revenue Stamps*, 2; *Supersedeas*.

SURVEY. See *Mexican Land-Grants*.

TARIFF. See *Customs Duties*.

TAXATION. See *Commerce*; *Constitutional Law*, 14, 15; *Internal Revenue Stamps*, 8; *Mandamus*, 2.
1. Where a railroad company is, for the purpose of constructing and repairing its road, invested with the powers and privileges and subjected to the obligations contained in certain enumerated sections of the charter of another company which was exempt from taxation, — *Held*, that the grant does not include immunity from taxation. *Railroad Company* v. *Commissioners*, 1.
2. *Railroad Companies* v. *Gaines* (97 U. S. 697) and *Morgan* v. *Louisiana* (93 id. 217) reaffirmed and applied to this case. *Id.*
3. Lands in Kansas held in fee-simple by a half-blood member of the tribe of Sac and Fox Indians of the Mississippi under a patent from the United States, issued pursuant to the seventeenth article of the treaty of Feb. 18, 1867 (15 Stat. 495), are not exempt from State taxation. *Pennock* v. *Commissioners*, 44.
4. *The Kansas Indians* (5 Wall. 737) distinguished. *Id.*

TAXATION (*continued*).

5. As long as a city exists, laws are void which withdraw or restrict her taxing power so as to impair the obligation of her contracts made upon a pledge expressly or impliedly given that it shall be exercised for their fulfilment. *Von Hoffman* v. *City of Quincy* (4 Wall. 535) cited on this point, and approved. *Wolff* v. *New Orleans*, 358.
6. Although such laws be enacted, *mandamus*, to compel her to exercise that power to the extent she possessed it before their passage, will lie at the suit of a party to such a contract who has no other adequate remedy to enforce it. *Id.*
7. *Meriwether* v. *Garrett* (102 U. S. 472) distinguished. *Id.*
8. A party who, under proceedings to enforce the statutory lien of the State of Tennessee, purchases a railroad does not acquire therewith the immunity from taxation thereon which the railroad company possessed. *Wilson* v. *Gaines*, 417.
9. Where the case stands on demurrer to his bill, which prays that the collection of taxes on the property be restrained, and avers that the sale was under those proceedings, this court will not, in the absence of a particular allegation to the contrary, presume that the sale embraced anything not covered by that lien. *Id.*
10. *Morgan* v. *Louisiana* (93 U. S. 217) cited and approved. *Id.*
11. As a general rule, the owner of taxable property, who seeks to enjoin the collection of a tax thereon, which he alleges to be in excess of what is lawful, must first pay or tender so much thereof as is justly due. *National Bank* v. *Kimball*, 732.
12. A bill to restrain the collection of a State tax upon the shares of a national bank is bad on demurrer, where it does not appear that there is any statutory discrimination against them, or that they, under any rule established by the assessing officers, are rated higher in proportion to their actual value than other moneyed capital. *Id.*
13. The bill filed in this case shows that the same percentage is assessed on such shares as upon other property, and that they are rated at about one-half their actual value. No case for relief is made by averring that some other property is rated for taxable purposes at less than one-half of its cash value. *Id.*

TAXATION, IMMUNITY FROM. See *Taxation*, 1–3, 8–10.

TENDER. See *Taxation*, 11.

TENNESSEE. See *Constitutional Law*, 26; *Taxation*, 8–10.

TESTATOR, SUIT TO ENFORCE LIABILITY OF. See *Causes, Removal of*, 6.

TOBACCO. See *Internal Revenue Stamps*, 8.

TOWNSHIP DONATIONS. See *Constitutional Law*, 27, 29, 30; *Municipal Bonds*, 9–12.

TOWNSHIPS, PROCEEDINGS TO ENFORCE LIABILITY OF.

Semble, that proceedings against the clerk of a township, to enforce the performance of its duty of levying the amount of a judgment recovered against it, are against it, and do not abate by his resignation and the appointment of his successor. *Thompson* v. *United States*, 480.

TRANSITORY ACTIONS. See *Jurisdiction*, 11, 12

TRUSTEE. See *Church Property*, 1.

TRUST FUND. See *Railroad Companies, Subscriptions to the Capital Stock of*, 4–7.

ULTRA VIRES. See *Railroad Companies, Subscriptions to the Capital Stock of*, 11.

USAGE. See *Contracts*, 7.

USE AND OCCUPATION. See *Church Property.*

USURY.

In Louisiana, usurious interest cannot be reclaimed, nor imputed to the principal, unless a suit for its recovery be commenced or a plea of usury be set up within twelve months after the payment thereof. *Cook* v. *Lillo*, 792.

UTAH. See *Criminal Law*, 3.

VALUE, STIPULATION FOR. See *Admiralty*, 2, 3.

VARIANCE. See *Practice*, 2.

VERDICT. See *Pleading*, 8; *Practice*, 14, 15.

VIRGINIA. See *Commerce*, 2.

WAIVER. See *Jury, Waiver of.*

WAREHOUSEMAN. See *Pledge.*

A warehouseman is not a guarantor of the title of property placed in his custody, although his receipts therefor are by statute negotiable. *Insurance Company* v. *Kiger*, 352.

WARRANTS. See *County Warrants.*

WIFE, SETTLEMENT OF LANDS UPON. See *Ante-nuptial Settlement.*

The settlement of lands by a man upon his wife is not invalid, if the rights of existing creditors are not thereby impaired. *Clark* v. *Killian*, 766.

WILL. See *Partnership*, 1, 2.

WITNESS. See *Criminal Law*, 1, 2; *Mortgage*, 7.

WORDS.

"Dollars." See *Bills of Exchange and Promissory Notes.*

"Inhabitants." See *Illinois*, 2.

WRIT OF ERROR. See *Constitutional Law*, 22.

1. The only paper purporting to be the writ of error in this case is in the name, and bears the teste, of the Chief Justice of the Supreme Court of Louisiana, and is signed by the clerk and sealed with the seal of that court. *Held*, that the suit must be dismissed for want of jurisdiction. *Bondurant, Tutrix*, v. *Watson*, 278.
2. This court cannot re-examine questions of fact upon a writ of error. *Miles* v. *United States*, 304.
3. Under the act of March 3, 1875, c. 137 (18 Stat., pt. 3, p. 470), a writ of error is the proper mode for reviewing here the order of the Circuit Court remanding an action at law removed thereto from a State court, and it lies without regard to the value of the matter in dispute. *Babbitt* v. *Clark*, 606.

YOSEMITE VALLEY AND MARIPOSA BIG TREE GROVE, COMMISSIONERS OF. See *Constitutional Law*, 28.

University Press: John Wilson & Son, Cambridge.

121, 21

ACME
BOOKBINDING CO., INC.

MAY 21 1985

100 CAMBRIDGE STREET
CHARLESTOWN, MASS.